Fermilab | U.S. DEPARTMENT OF ENERGY | Office of Science

650MHz Intermediate Cryogenic Transfer Line

Joe Hurd, Lead Engineer

650 CTL FDR

September 24, 2020

A Partnership of:

- US/DOE
- India/DAE
- Italy/INFN
- UK/UKRI-STFC
- France/CEA, CNRS/IN2P3
- Poland/WUST

Purpose

- The PIP2IT 650 Test Stand requires connecting the existing PIP2IT cryo transfer line to the 650 MHz cryomodules for testing
- Interface of 650 MHz cryomodules does not match HWR
  - Requires an intermediate transfer line to jumper:
    - 5K Return
    - 40K Supply
    - 80K Return
  - Remaining lines will not require jumper:
    - 5K supply
    - 2K pumping
- An Intermediate Cryo Transfer Line (650 CTL) was designed to serve this purpose
- The 650 CTL will also allow for controlled warm-up/cool-down of the 40K shield of the 650 MHz cryomodules

Design Change since PDR

- The HB650 cryomodule 40K shield has a cooldown constraint of 20K/hr
  - The existing PIP2IT Transfer Line does not have controlled warm-up/cool-down capabilities at the North end of the transfer line (the location where the 650 Test Stand will be located)
  - 300K Warm Helium injection port was added to the 650 CTL design
  - ½” ANSI flange will be connected to the warm helium header with control valve supported on the cave wall, similar to SSR1.
- Temperature control input will be based on temperature sensors within the HB650

PDR Review/Recommendations

Add vacuum parallel plate by the FDR. Make sure location good for u-tube pulls. Make sure stands and platform do not interfere.
Finish preliminary helium relief requirements by the FDR. Apply this to size the relieve valves.
Develop preliminary design for CTL supports and platforms necessary for U-tube installation/ removal by the FDR.
Develop preliminary procedure for isolation, depressurization, and U-tube installation/removal by the FDR. Verify that technicians have sufficient access to perform all steps in the procedure.
Check tolerance specifications and investigate U-tube design to ensure that a common U-tube set can be used for all cryomodules by the FDR.
Consider a means to ensure that a flex hose is not overstressed should a spider hang up by the FDR.
Consider lowering the elevation of the horizontal section of the CTL toward the floor to help simplify the CTL stand and to allow a platform over it to make U-tube access easier by the FDR.

Flow Schematic

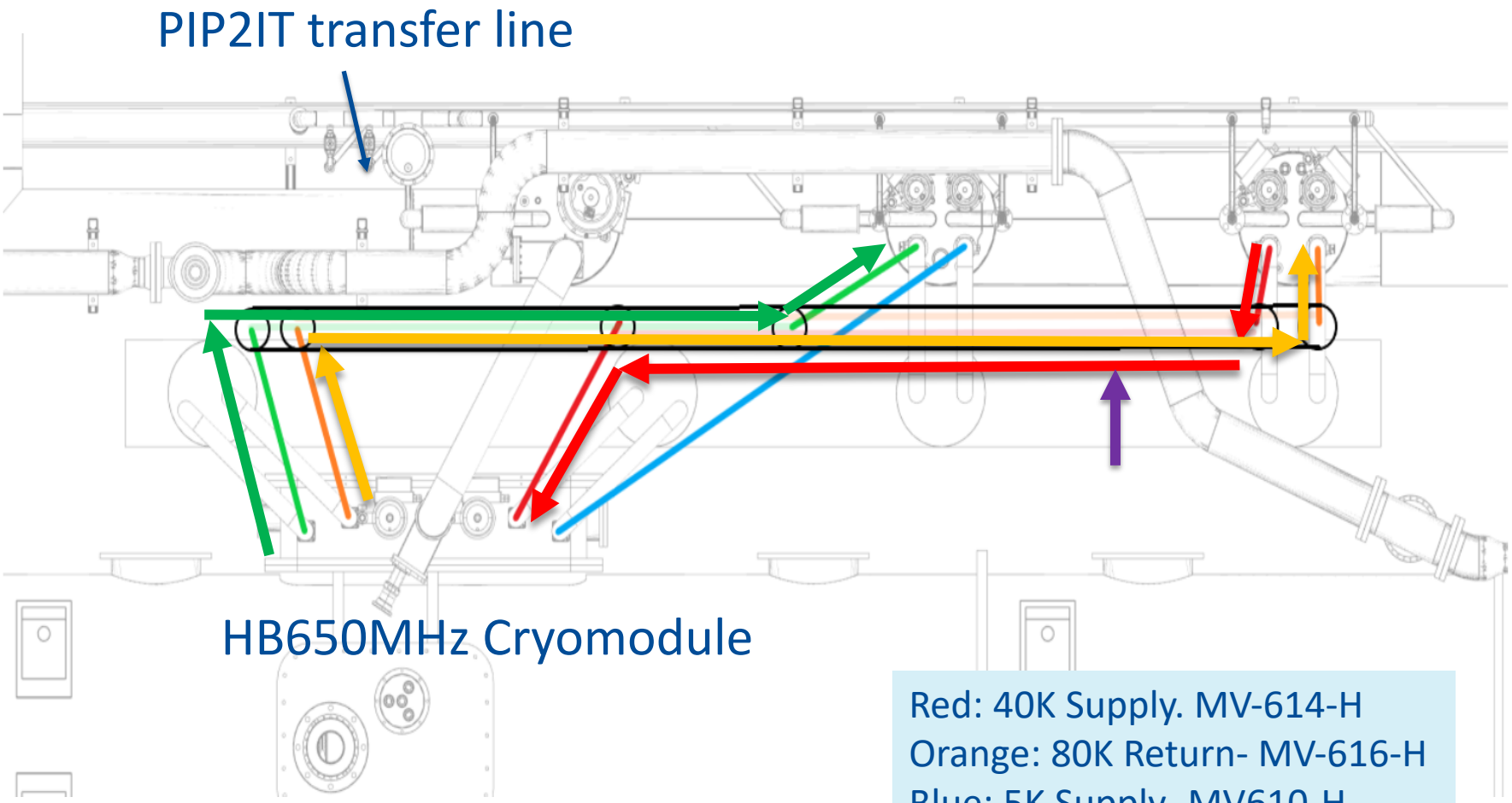

Red: 40K Supply. MV-614-H
Orange: 80K Return- MV-616-H
Blue: 5K Supply- MV610-H
Green: 5K Return- MV-612-H
Purple: Warm Helium injection

PID

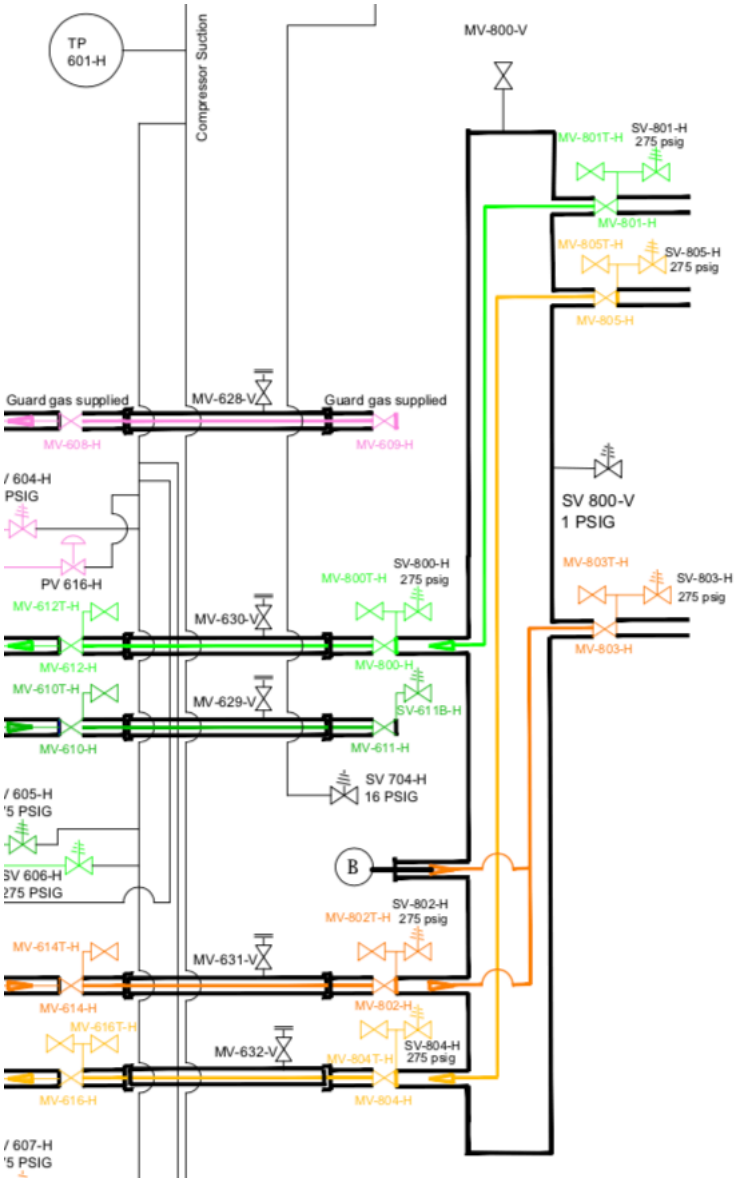

- Small snip from the overall PID (F10042546 - Indico site SDP doc#13) will be updated in Teamcenter closer to installation
  - HB650 CM will be added to this PID once design is known

- Orange 40 K Supply
- Gold- 80 K Return
- Dark Green- 5K Supply
- Light Green- 5K Return
- Pink- 2K Return
- “B” in circle – indicates warm He injection

3D model - in place in PIP2IT

More views available on Indico
in 3D Models-CTL Folder

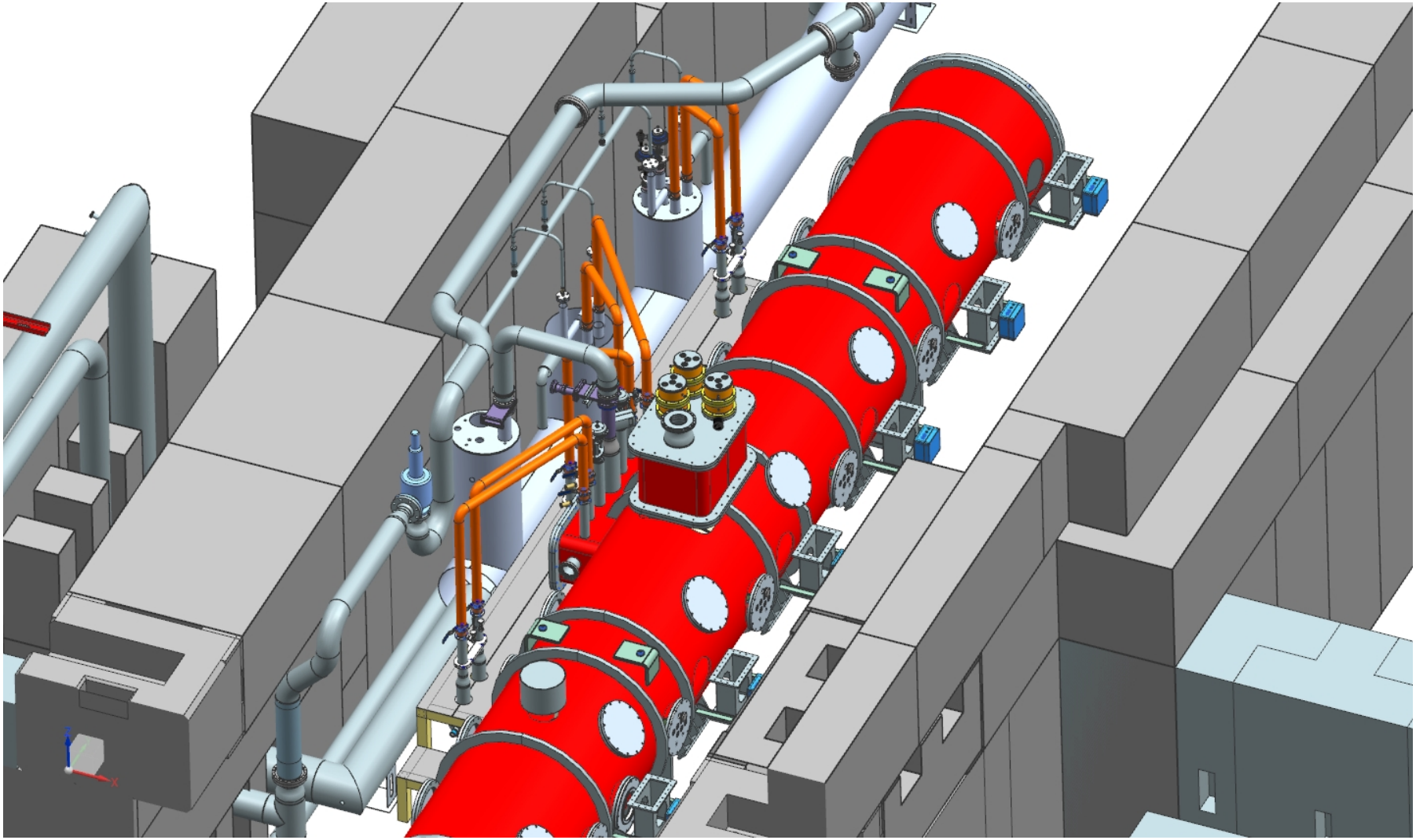

3D model

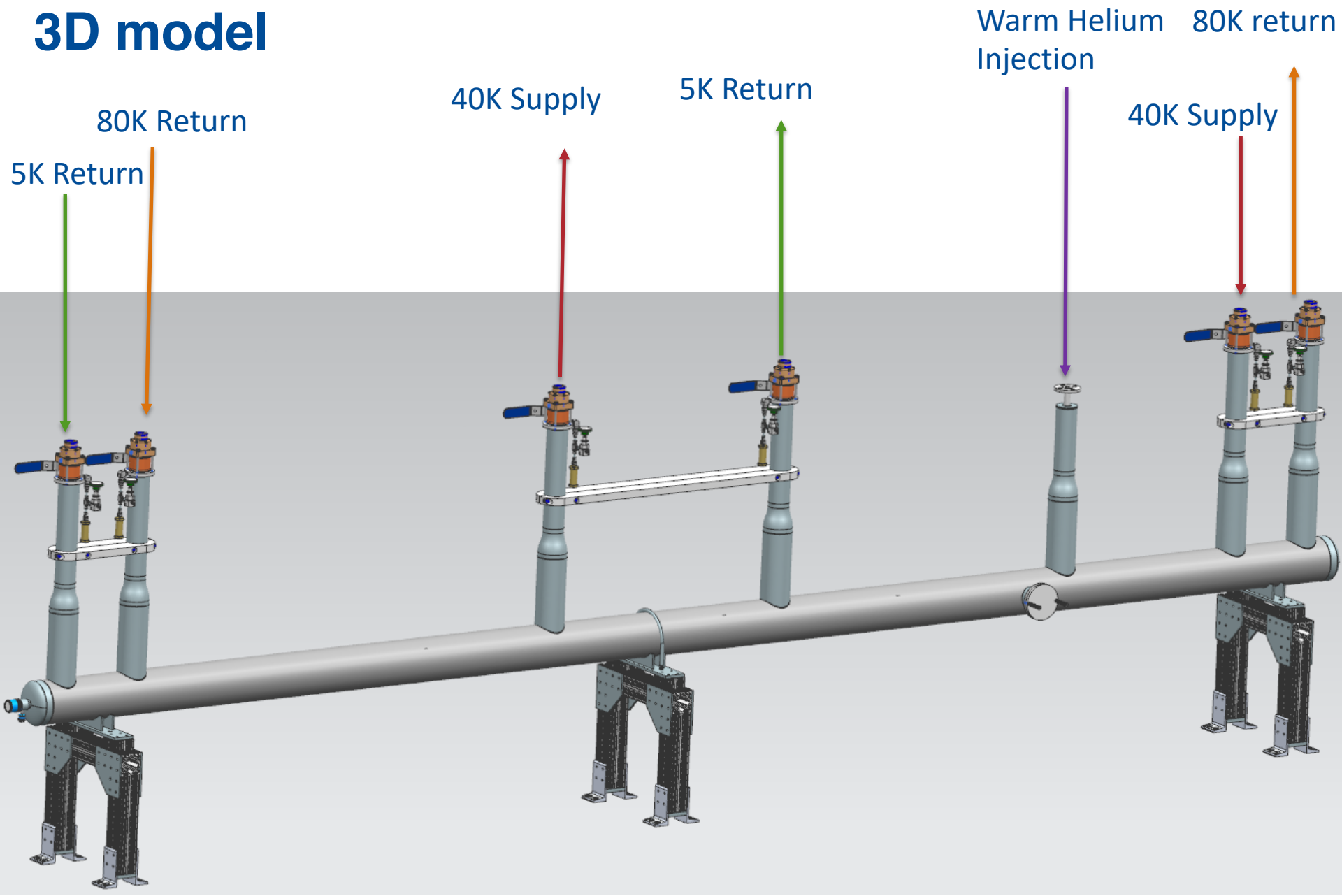
5K Return
80K Return
40K Supply
5K Return
Warm Helium Injection
40K Supply
80K return

Relief and Bleed Valves + Brace

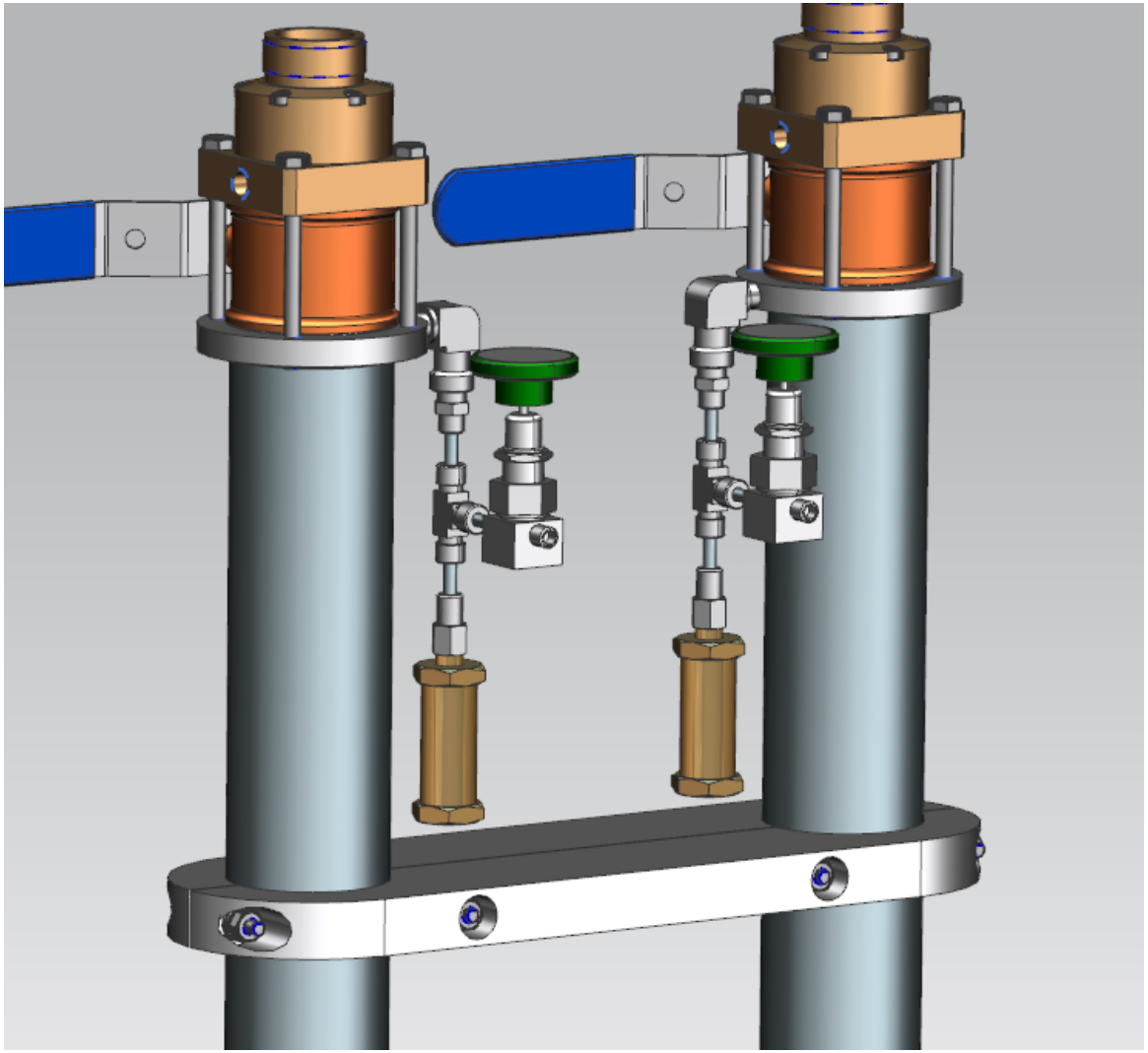

Overview Drawing

Full version (F10126703) located on Indico – CTL Drawings folder (several sub-component drawings also included)

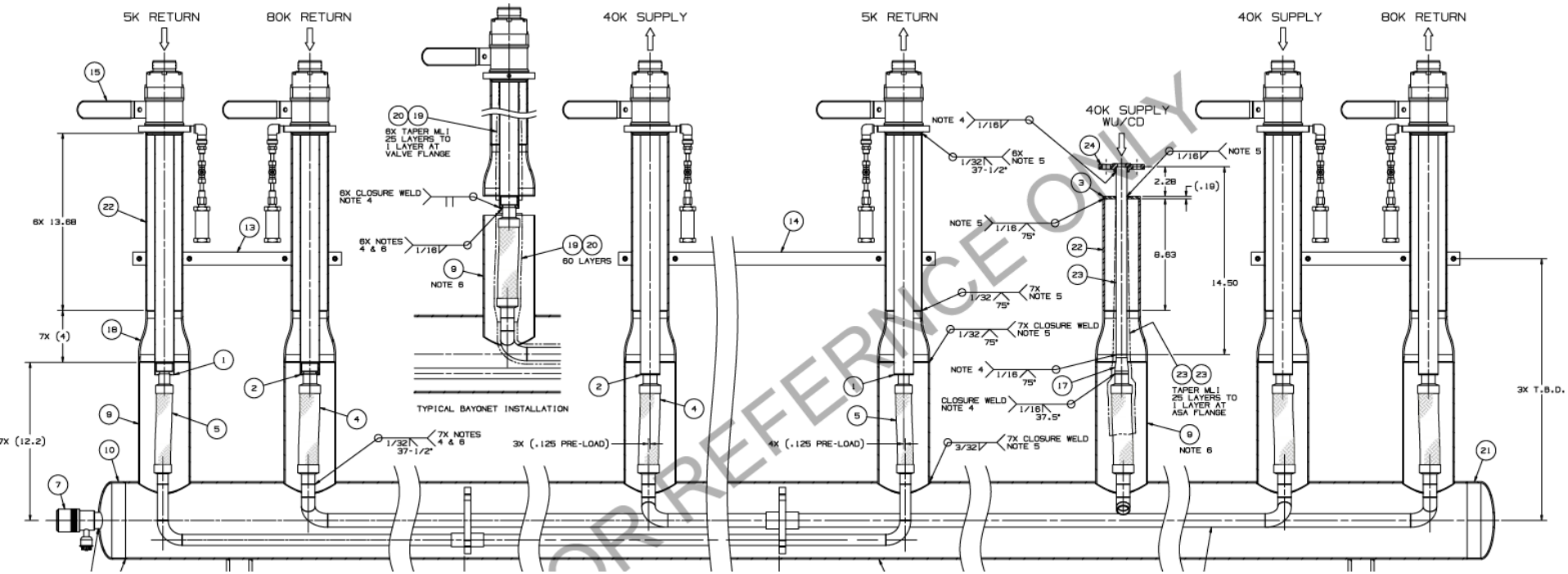

Internal Drawing piping

Full version (F10136778) located on Indico – CTL Drawings folder

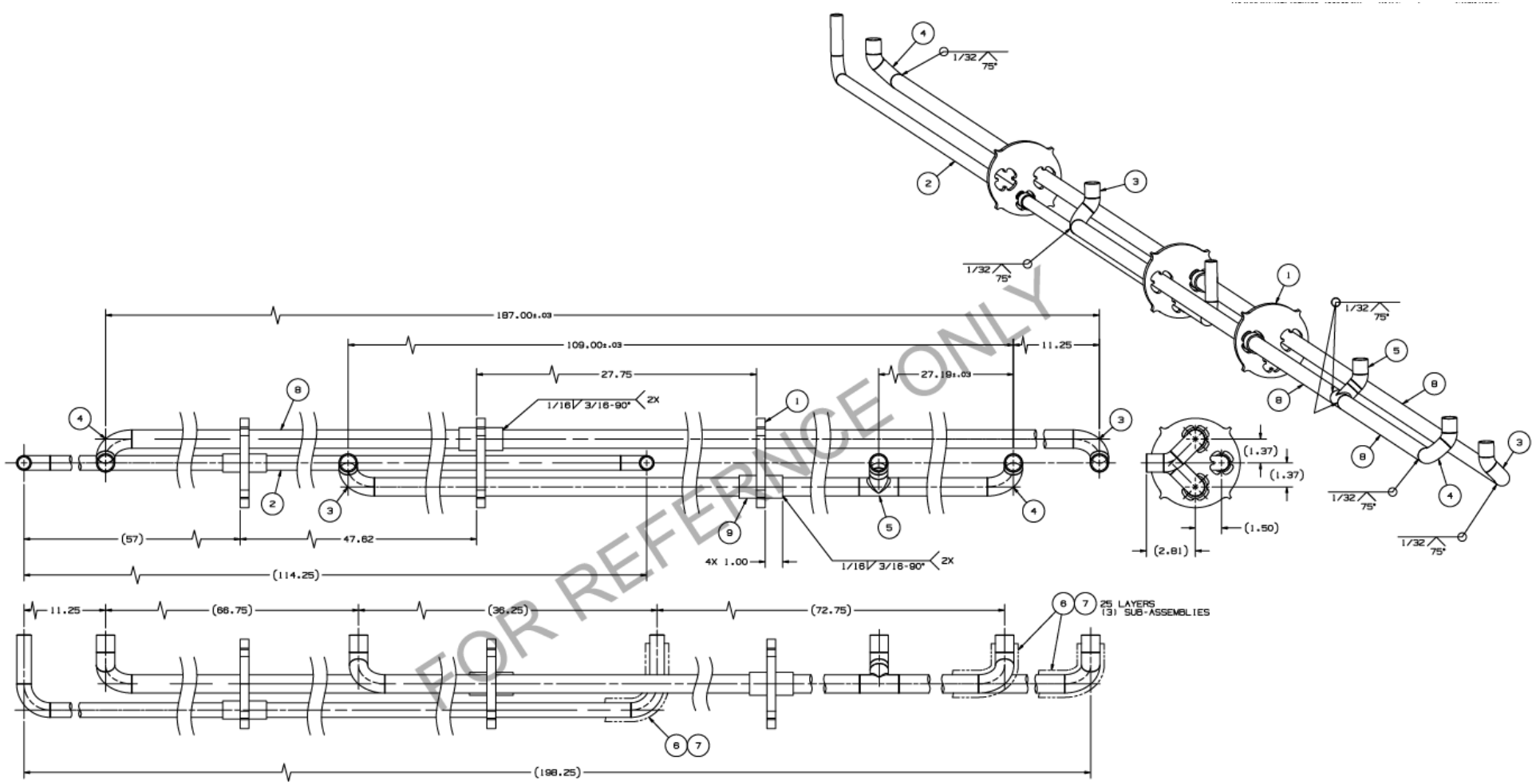

Spider-G10

Full version (F10126720) located on Indico – CTL Drawings folder

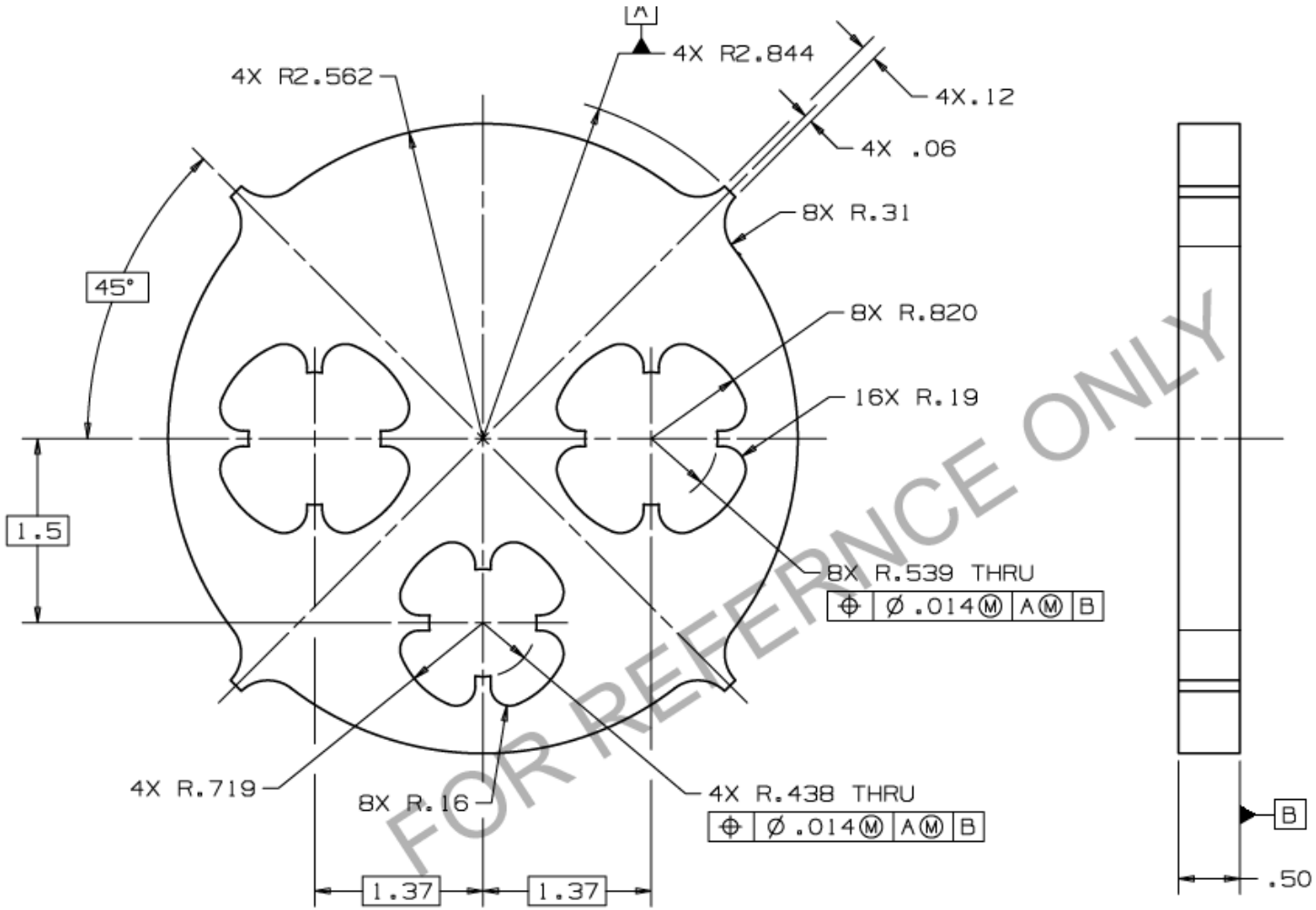

Support Stands

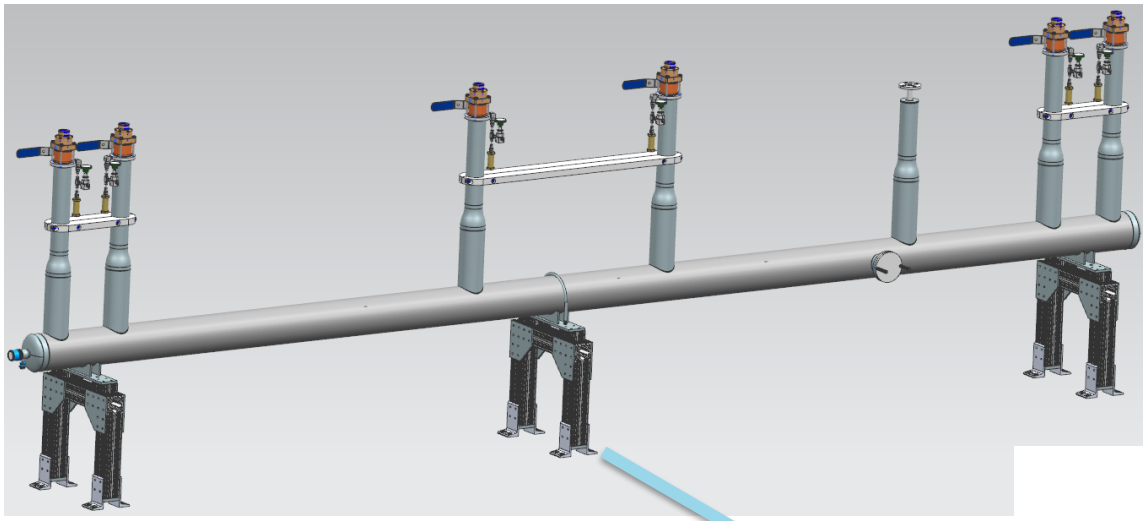

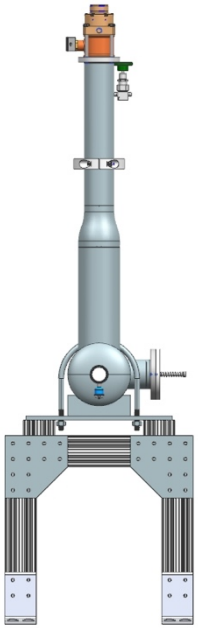

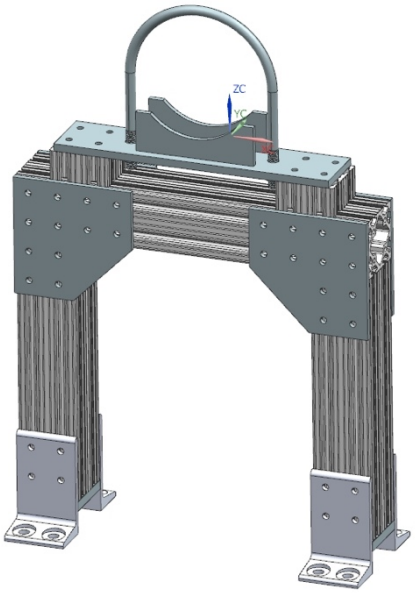

Multiple views located on Indico –
3D Models-CTL support stand folder

Work Platform

Multiple views located on Indico – 3D Model-Work Platform folder

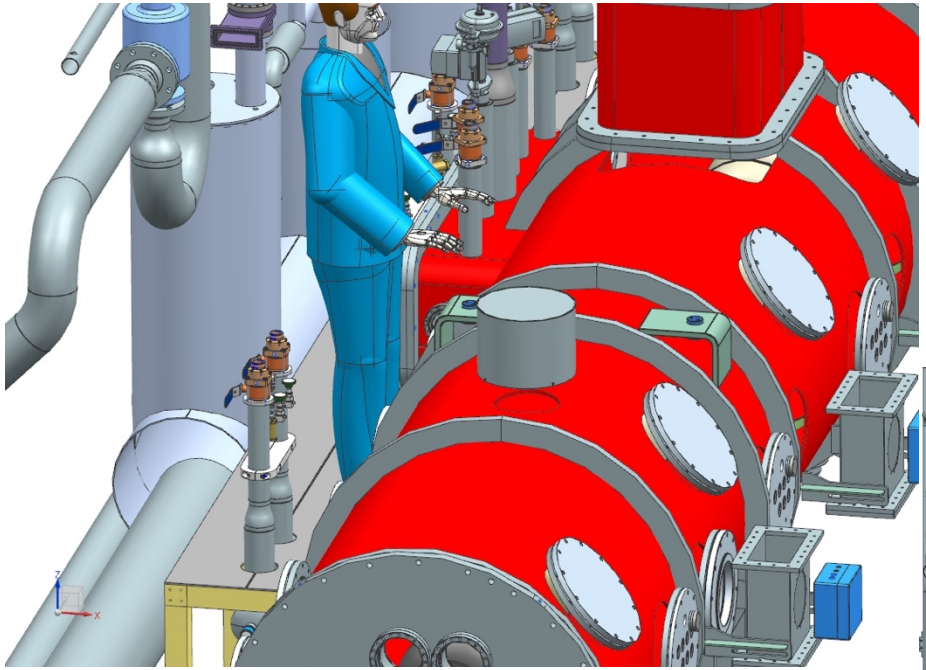

(Person shown is 6’ 2”)

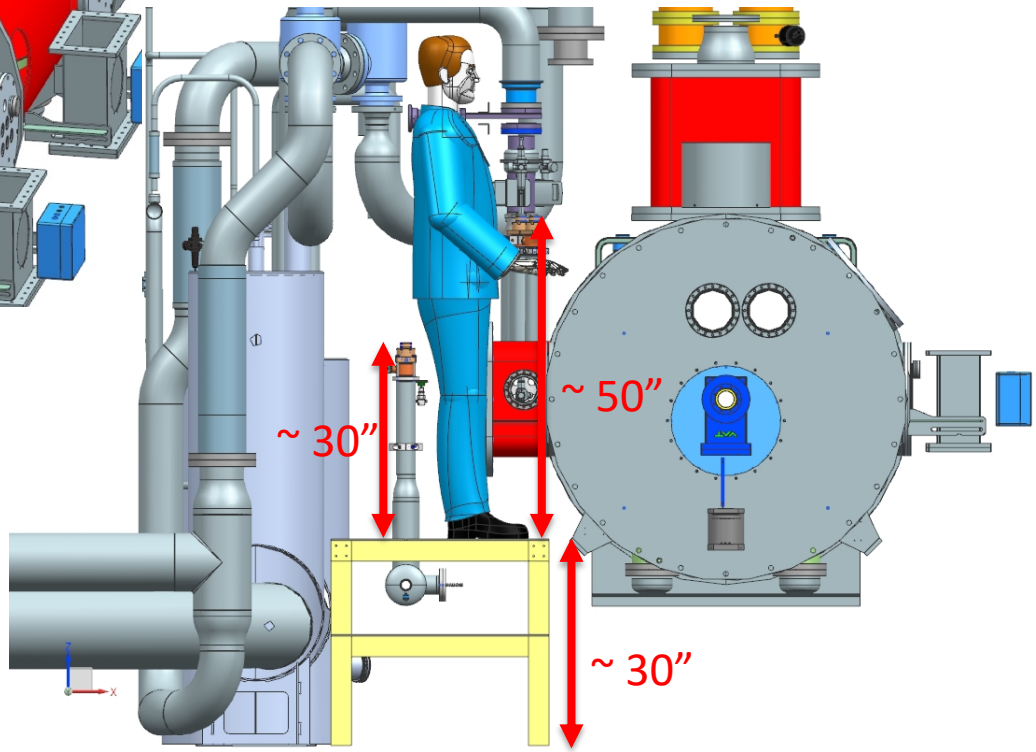

- Horizontal CTL lowered
- Work Platform added over CTL
- Comfortable working height
- Protects CTL and parallel plate relief

Work Platform

Multiple views located on Indico –
3D Model-Work Platform folder

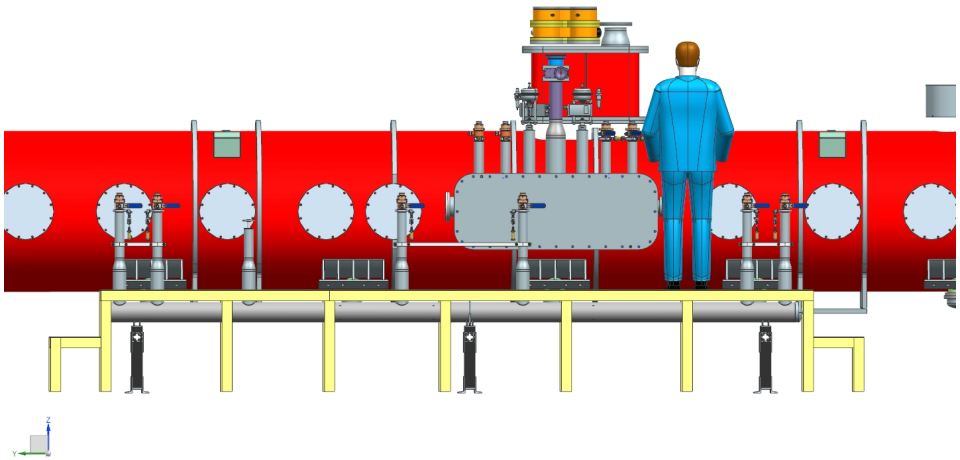

- Provides safe access behind CM
- Made out of 80/20
- Modular design similar to other PIP2IT platforms (see next slide)

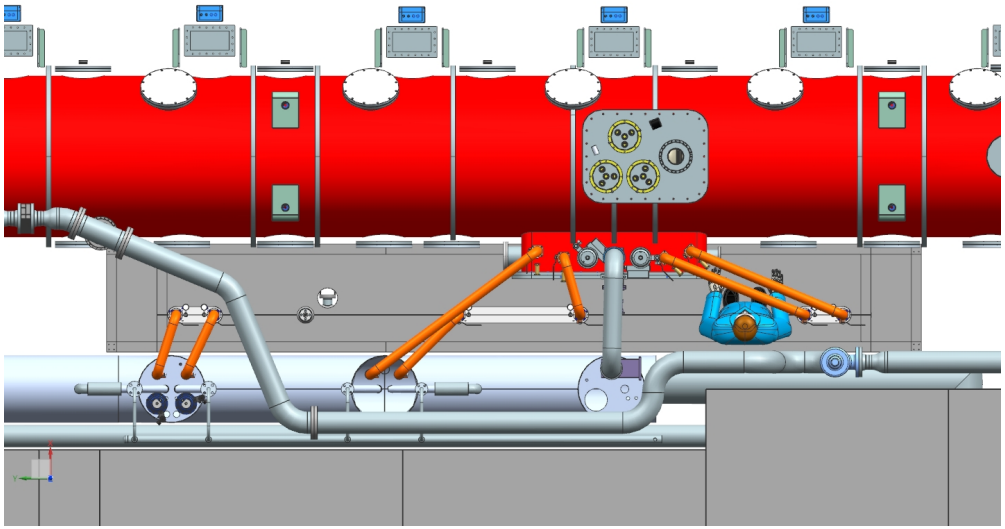

Work Platform – example drawings

Multiple views located on Indico – False Floor and U-tube example folder

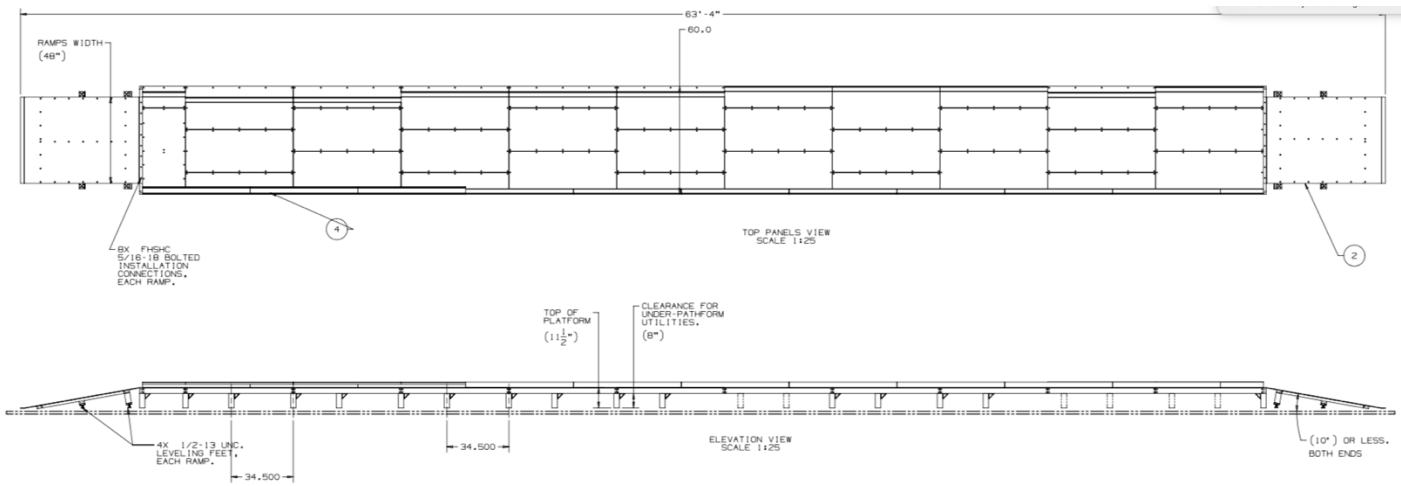

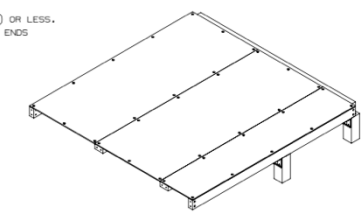

- Example dwgs/models of existing PIP2IT HWR aisle platform
- Made out of 80/20
- Modular design

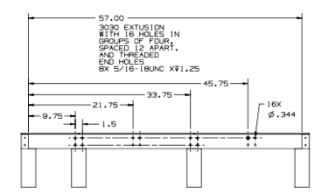

Thermal Flexibility

Indico – SDP doc#15

Line	Length	Contraction	Static Min bend radius Radius	Required Live length with preload	Required Live Length for full pipe	Current live length	FOS with preload	FOS for full length
	in	in		in	in	in		
5K return	57.13	0.17	1.70	1.26	2.72	5.50	4.38	2.02
80K return	93.50	0.28	2.10	2.56	4.28	5.50	2.15	1.29
40K Supply	54.50	0.16	2.10	1.27	2.91	5.50	4.33	1.89
Wu/CD	27.25	0.04	1.20	---	0.99	4.00	---	4.04

LATERAL OFFSET

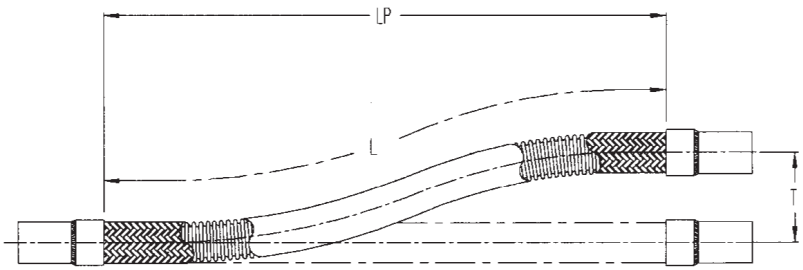

Formula: $L = \sqrt{20R \times T}$ $L_p = \sqrt{L^2 - T^2}$

R = Hose minimum bend radius in this formula

Change from PDR: changed use of Dynamic Bending Radius to Static Bending Radius. Leads to 80K Return to use 5.5” live length on flex hose.

Preload of 1/8” implemented in calculation, except for WU/CD supply which is assumed no preload

Pressure Relief- Cryogenic Process Pipe

Indico – SDP doc#14

Line	Qa	Factor of Safety
	ft3/min_Air	
5K RETURN	5.85	11.80
40K SUPPLY	6.14	11.25
80K RETURN	5.91	11.70

Installed Relief Capacity			
K_d	0.67	-	coefficient of discharge
W_a	923.63	lb/hr	
	69.09	scfmAir	
C	356	-	
M	28.97	mol. Wt	
T	520	R	when W_a is the rated capacity
A	0.05	in2	
d_orifice	0.25	in	

- Generant CRV-500B-K-275-psi (1/4") pressure relief valves will be installed on each manual isolation valve for trapped volume relief
- Relief calculated based on CGA S1.3-2008
- Reliefs based on one (1) relief valve when there are two (2) installed

Pressure Relief - Vacuum

Indico – SDP doc#14

Cross section	Water capacity	Volume	Water density multiplier	water capacity	require cross section area	Factor of Safety
in2	in2/lb	ft3	lb/ft3	lbs	in2	
4.91	0.00024	3.77	62.40	235.32	0.06	86.92

The vacuum jacket relief capability was analyzed using CGA1.3-2008 requirements.

Per the CGA guidelines, the CVI can not relieve the transfer line adequately. 2 ½" parallel plate installed

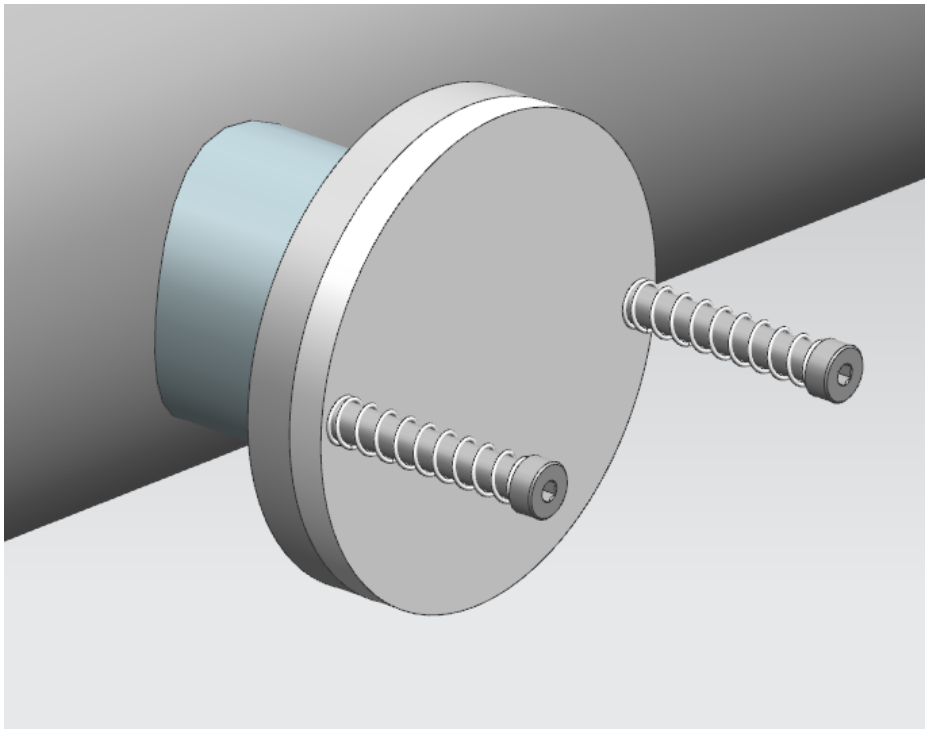

Engineering Risk Analysis

Indico – SDP doc#20

	Chapter	Engineering Risk Element								High Risk	Subtotal	Assessment
		A	B	C	D	E	F	G	H			
1	Requirements and Specifications	1	1				4		1	≥ 12	7	Standard Risk
3	Requirements and Specification Review	1	1		2	2	4		1	≥ 18	11	Standard Risk
4	System Design	1	1	3		2	4	1	1	≥ 21	13	Standard Risk
5	Engineering Design Review	1	1	3		2	4	1	1	≥ 21	13	Standard Risk
6	Procurement and Implementation		1		2	2	4	1	1	≥ 18	11	Standard Risk
7	Testing and Validation	1				2	4	1	1	≥ 15	9	Standard Risk
8	Release to Operations						4			≥ 4	4	High Risk
9	Final Documentation		1				4			≥ 7	5	Standard Risk

Project Risk Element								High Risk	Subtotal	Assessment
I	J	K	L	M	N	O	P			
3	2	3	1	1	1	1	2	≥ 25	14	Standard Risk

Engineering Risk Elements	
A	Technology
B	Environmental Impact
C	Vendor Issues
D	Resource Availability
E	Quality Requirements
F	Safety
G	Manufacturing Complexity
H	Transportation and Rigging Complexity

Project Risk Elements	
I	Schedule
J	Interfaces
K	Experience / Capability
L	Regulatory Requirements
M	Project Funding
N	Project Reporting Requirements
O	Public Impact
P	Project Cost

Prevention through Design

Indico – SDP doc#07

	Potential Hazard, Threat, or Unwanted Consequence						Inherent Risk			Mitigation	Residual Risk			Risk Mitigation Status & Details			
#	Description	Owner(s)	Subsy	Life Cycle	Risk to who?	Risk to what?	Severity	Prob.	Impact	General Description	Severity	Prob.	Impact	Action	Effectiv	Status	Comments
1	Tight working conditions during installation if scheulde runs behind 650MHz CM installation	Lead Engineer		Installation	Technicans	Body	Medium	Likely	Serious	Set up comunication to the overall project to hold CM installation and alignment until tranferline is installed.	Minimal	Unlikely	Negligible	Int. into Design	Admin. Controls	Implemented	
2	Tight working conditions during U-tube stinging and un-stinging which could lead to cryogenic burns and ODH scenatios	Lead Engineer		Design, Operations	Technicans	Body	High	Likely	Critical	Proper LOTO procedures to be develped, training to be impletmented, and Has written	Low	Possible	Moderate	Int. into Admin Proc. and PPE	PPE	Implemented	
3	Long lead items on delivery	Lead Engineer		Procurement	Project	schedule	Low	Unlikely	Minor	Ensure long lead items are identified and ordered	Minimal	Possible	Minor	Int. into Design	Admin. Controls	No Action Required	
4	Unqualified welders & unqualified weld procedures used on piping for cryogenic service	Lead Engineer		Testing, Commissioning, Operations	Catastrophic failure of joint could lead to ODH event as cryogens discharged through vacuum vessel relief valve	Leak spoils insulating vacuum. Accelerator operations halted. System warmed up & disassembled to fix.	High	Likely	Critical	Use ASME BPVC IX qualified welders and weld procedures when welding cryogenic piping. Code qualified welders and weld procedures lead to highly reliabile welds, but non-code qualified welds and weld procedures lead to welds of unknown and generally lower level of quality.	High	Rare	Minor	Int. into QA Plan	Admin. Controls	Implemented	
5	Tight working contditions when maintaining the insulationg vacuum	Lead Engineer		Maintenance	Technicans	Body	Low	Possible	Moderate	Ensure in design and installation enough room exists to access insulationg pumpdown port or install provisions to allow easy attachment of vacuum pump	Minimal	Rare	Negligible	Int. into Design	Eliminate	In Process	
6	Cryogens present inside cave	Lead Engineer		Operations	Technicans and other personnel inside cave	Body	High	Possible	Serious	Ensure proper LOTO procedures are written and ODH calculation verify precautions needed while inside cave	Low	Unlikely	Minor	Int. into Design	Engr. Controls	Implemented	
7	High pressure Warm helium able connected to cryogenic system	Lead Engineer		Shipping, Operations	equipment and personnel	Operations	Medium	Unlikely	Moderate	Safety relief valves and controls to be implimented based on operational needs	Low	Unlikely	Minor	Int. into Design	Engr. Controls	In Process	

Prevention through Design

- Procurement
  - Simple design
  - Not many long lead items to procure
- Safety
  - 650 CTL will be located between the PIP2IT Transfer line and the 650MHz Cryomodule
  - Space will be tight for personnel to sting and unsting u-tubes. Safety measures must be considered
    - ODH - Proper LOTO procedure
    - Tight Space - proper footing and work platforms, clear accessibility, use of crane (similar to current HWR and SSR1 procedures)

FMEA

- Failure Mode and Effect analysis shows the simplicity of the design (see Indico-SDP doc#06 for full FMEA)
  - A manual valve fails closed, it prevents the U-tube from being stung into the 650 CTL
  - A manual valve fails open, can lead to an ODH event
  - A safety valve fails closed, there is a redundant safety valve on the line and upstream if the system is stung in
  - A safety valve fails open, leads to an ODH event
- The cave remains safe in both the “failed open” scenarios, as this is accounted for in the ODH analysis
  - Additionally, alarms and measures are in place to warn personnel of the danger: Personal O2 monitor, O2 monitors mounted on wall with sirens and strobes

U-tubes

- U-tubes will be modeled in the overall 3D to ensure no unnecessary overlap with other u-tubes or existing piping
- Once 650 CTL is installed and HB650 CM is in place, Alignment personnel takes measurements for the final fabrication drawing
  - End pieces will be fabricated ahead of time
  - Lengths entered in model and final drawings generated
  - U-tubes fabricated and pressure tested
  - Piping note written ahead of time if possible
  - U-tubes installed

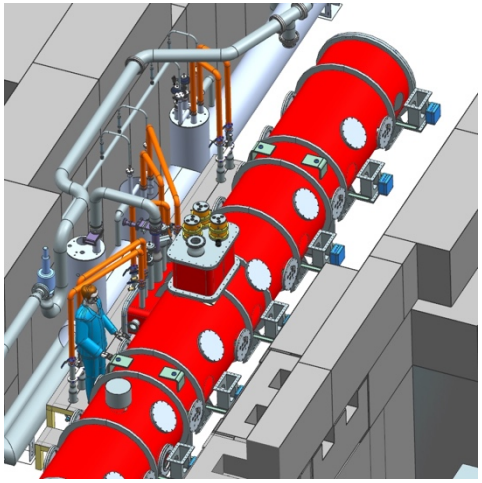

Bayonet Tolerances

- No bayonet tolerances have been specified for the HB650 Cryomodule design at this time
  - This effort is being worked on by Andrew Dalesandro of the PIP-II Technical Integration team

- Necessary to determine for U-tube reusability within PIP2IT for testing of multiple HB650 cryomodules
  - LB650 interfaces have not yet been designed as of this presentation.

- U-tubes with flexibility will be developed similar to HWR 80K return U-tube shown in next slide

HWR 80K Return - example F10132199

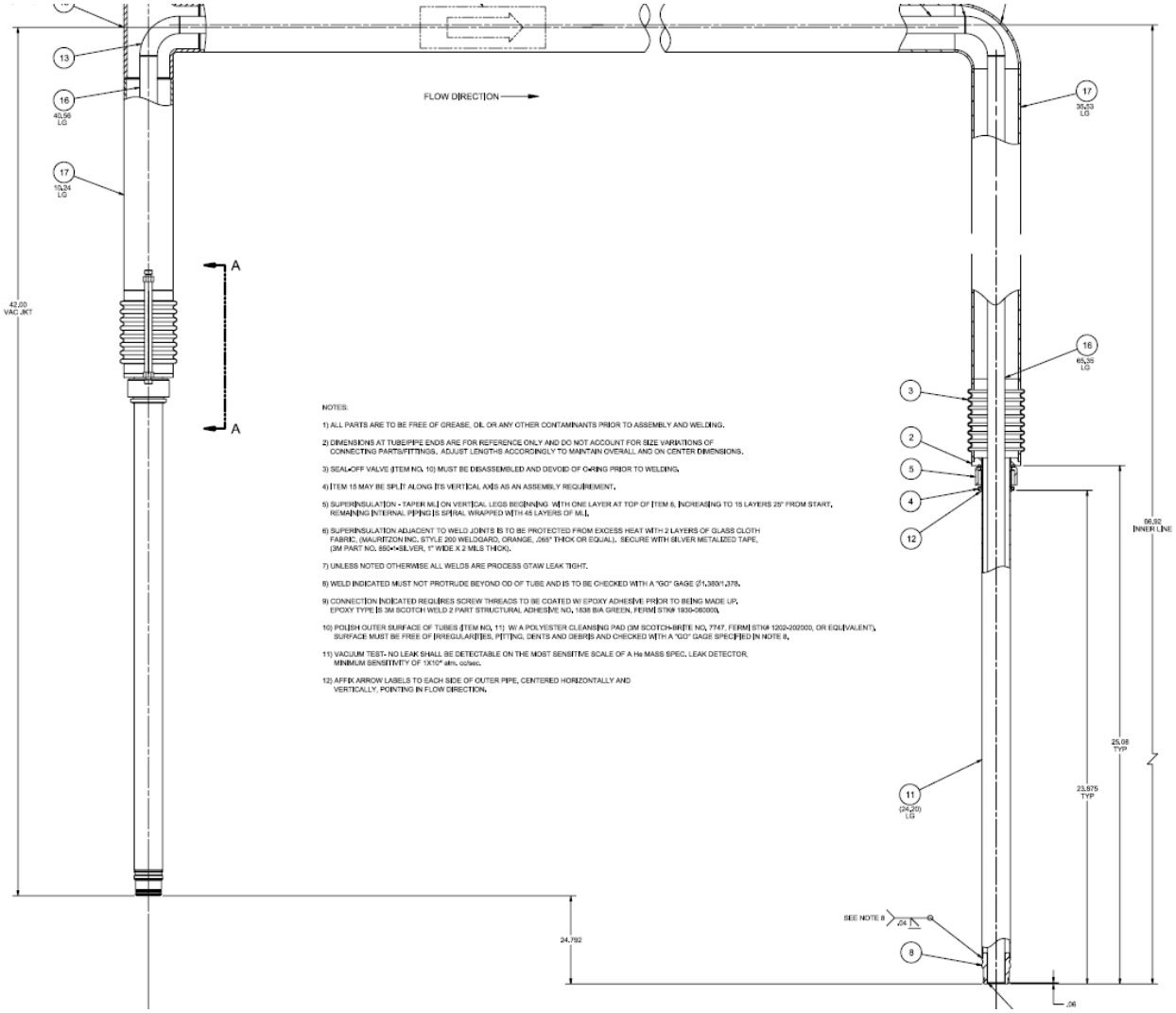

Full version (F10132199) located on Indico – False Floor and U-tube example drawings folder

HWR 2K return - example F10117405

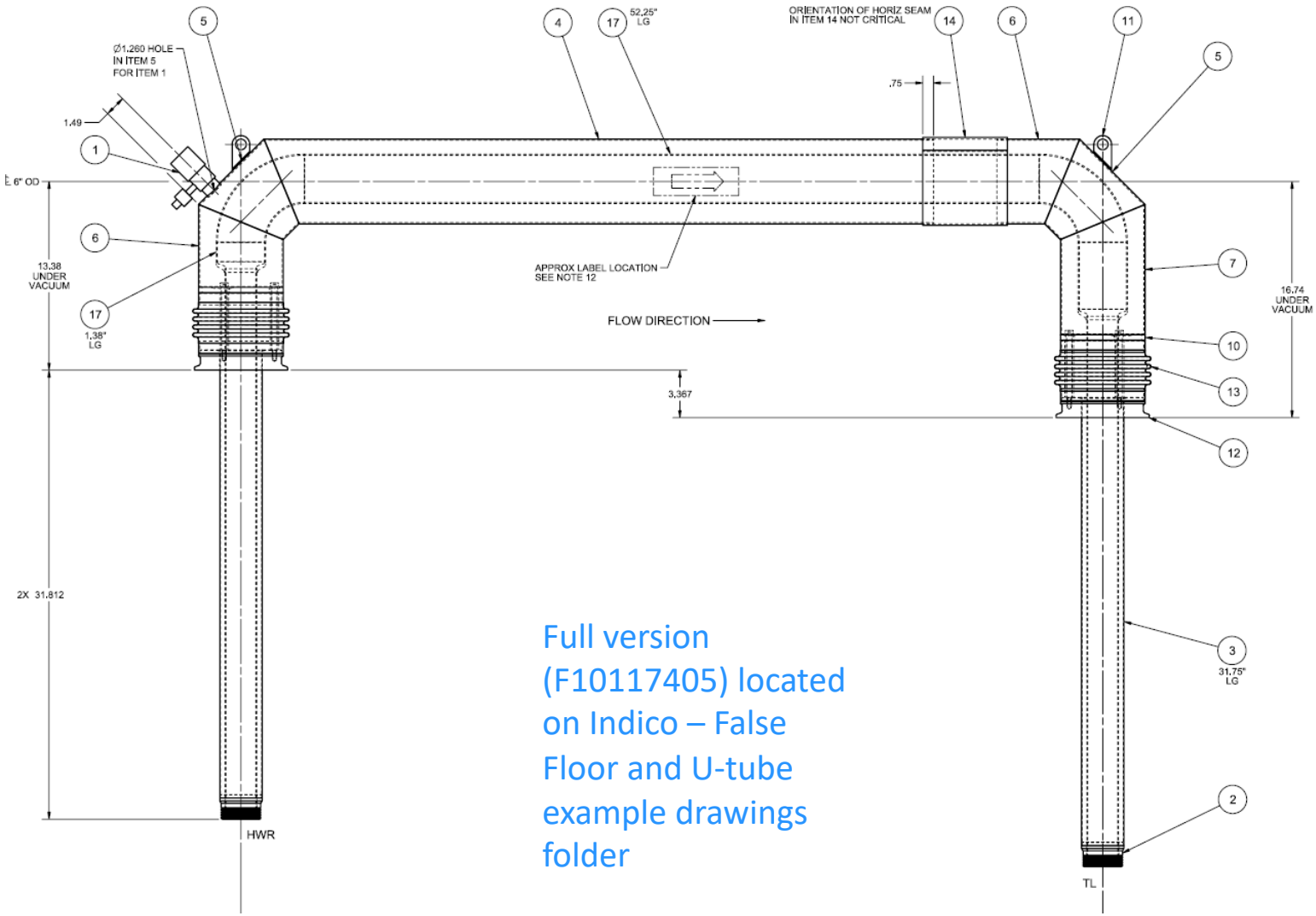

Full version (F10117405) located on Indico – False Floor and U-tube example drawings folder

U-tube Insertion and Isolation Plan

Indico – SDP doc#19

- U-tube Insertion and Isolation Procedure ED0012574 based on HWR pump and backfill doc ED0011501
  - Includes Pump and Backfill procedure for insertion phase
  - Applied Physics and Superconducting Technology Division Departmental Procedure (TDDP) will be developed for a standard LOTO procedure to be implemented when swapping cryomodules.

ODH Analysis

Indico – SDP doc#08

Sr.#	Component	Numbers	Type(s) of failure	Leak pressure (psig)	Leak temperature (K)	Area (in2)	Diameter squared (in^2)	Flow density (lb/ft3)	Flow rate (lb/hr)	Flow rate SCFM (R')	Flow rate for further calcs (R') scfm	Total ventilation rate (Q) (cfm)	Oxygen concentration - perfect mixing, fan blowing fresh air in, at steady state (%)	Fatality factor (Fvent,i)	FR (higher filter)	Probability of failure/hr (Pi)	Pvent,i	Pno_vent,i	ODH Fatality Rate with ventilation FR (1/hr)	ODH Fatality rate with no ventilation (FR) (1/hr)
7	Cryogenic line F NPS 3/4" Sch 10	3	(i) Small leak, 10mm2.	162	80	0.0155	0.0197352	0.4478302	317.8685363	523.4752927	523.48	4000	18.57	2.4376E-08	2.4376E-08	5.00E-07	0.9992	3.16E-03	3.65E-14	4.75E-09
		20	(ii) Small leak weld failure	162	80	0.0155	0.0197352	0.4478302	317.8685363	523.4752927	523.48	4000	18.57	2.4376E-08	2.4376E-08	2.53E-10	0.9992	3.16E-03	1.23E-16	1.60E-11
		3	(iii) Rupture	175	80	0.6137	0.7813871	0.4800286	13542.85831	22334.98241	1546.57	4000	15.14	9.7767E-06	9.7767E-06	2.00E-08	0.9992	3.16E-03	5.86E-13	1.90E-10
8	Cryogenic line B NPS 4" Sch 10	3	(i) Small leak, 10mm2.	10	4.5	0.0155	0.0197352	7.631928	326.0246808	79.1083731	79.11	4000	20.59	7.0717E-10	7.0717E-10	0.0000005	0.9992	3.16E-03	1.06E-15	4.75E-09
		15	(ii) Small leak weld failure	10	4.5	0.0155	0.0197352	7.631928	326.0246808	79.1083731	79.11	4000	20.59	7.0717E-10	7.0717E-10	7.50E-10	0.9992	3.16E-03	7.95E-18	3.56E-11
		3	(iii) Rupture	40	5	14.25	18.143664	7.6749851	601153.3606	287196.5153	1546.57	4000	15.14	9.7767E-06	9.7767E-06	5E-10	0.9992	3.16E-03	1.47E-14	4.75E-12
9	Cryogenic line B NPS 2½" Sch 10	2	(i) Small leak, 10mm2.	10	4.5	0.0155	0.0197352	7.631928	326.0246808	79.1083731	79.11	4000	20.59	7.0717E-10	7.0717E-10	0.0000005	0.9992	3.16E-03	7.07E-16	3.16E-09
		15	(ii) Small leak weld failure	10	4.5	0.0155	0.0197352	7.631928	326.0246808	79.1083731	79.11	4000	20.59	7.0717E-10	7.0717E-10	4.36E-10	0.9992	3.16E-03	4.62E-18	2.07E-11
		2	(iii) Rupture	40	5	5.453	6.9429752	7.6749851	230041.3526	109900.5332	1546.57	4000	15.14	9.7767E-06	9.7767E-06	5E-10	0.9992	3.16E-03	9.77E-15	3.16E-12
10	Safety valve SV 610,611,612 613, 620 621, 622 623,800,801 (Line C, D) on bayonets	12	(iii) Rupture	275	5	0.132	0.1680676	9.9158286	16596.11486	32358.18535	1546.57	4000	15.14	9.7767E-06	9.7767E-06	5E-10	0.9992	3.16E-03	5.86E-14	1.90E-11
11	Safety valve SV 614,615, 616 617, 624 625, 626, 627,802,803,804,805 (Line E, F) on bayonets	14	(iii) Rupture	275	60	0.132	0.1680676	0.9577744	5157.907422	8676.324793	1546.57	4000	15.14	9.7767E-06	9.7767E-06	5E-10	0.9992	3.16E-03	6.84E-14	2.22E-11
12	Safety valve SV 710, 711 (Line F) on bayonets (HWR)	0	(iii) Rupture	275	80	0.132	0.1680676	0.7244008	4485.712023	7482.37066	1546.57	4000	15.14	9.7767E-06	9.7767E-06	5.00E-10	0.9992	3.16E-03	0.00E+00	0.00E+00
13	Safety valve SV 608, 609, 618, 619 (Line B) at valve box	4	(i) External leak	10	4.5	0.05	0.063662	7.631928	1051.692519	255.1883003	255.19	4000	19.74	3.1415E-09	3.1415E-09	1.00E-08	0.9992	3.16E-03	1.26E-16	1.27E-10
		4	(ii) Rupture	40	5	0.6137	0.7813871	7.6749851	25889.6714	12368.59659	1546.57	4000	15.14	9.7767E-06	9.7767E-06	5.00E-10	0.9992	3.16E-03	1.95E-14	6.33E-12
14	Safety valve SV 606, 611 (Line C, D) at valve box	4	(i) External leak	36.75	6	0.05	0.063662	3.9068823	1442.499898	1061.507351	1061.51	4000	16.60	7.7118E-07	7.7118E-07	1.00E-08	0.9992	3.16E-03	3.08E-14	1.27E-10
		4	(ii) Rupture	275	6	0.6137	0.7813871	9.4415711	75291.55244	128477.618	1546.57	4000	15.14	9.7767E-06	9.7767E-06	5.00E-10	0.9992	3.16E-03	1.95E-14	6.33E-12
15	Safety valve SV 608, 613 (Line E, F) at valve box	4	(i) External leak	162	60	0.05	0.063662	0.5940293	1180.954262	1954.906549	1546.57	4000	15.14	9.7767E-06	9.7767E-06	1.00E-08	0.9992	3.16E-03	3.91E-13	1.27E-10
		4	(ii) Rupture	275	60	0.6137	0.7813871	0.9577744	23980.362	40338.33731	1546.57	4000	15.14	9.7767E-06	9.7767E-06	5.00E-10	0.9992	3.16E-03	1.95E-14	6.33E-12
16	Bayonets (Line B)	2	(i) U-tube change (dia 3.09) small event	10	4.5	7.5	9.5492966	7.631928	157753.8778	38278.24505	1546.57	4000	15.14	9.7767E-06	9.7767E-06	1.79E-04	0.9992	3.16E-03	3.49E-09	1.13E-06
17	Bayonets (line C, D)	6	(i) U-tube change - small event	36.75	6	1.601	2.0384565	3.9068823	46188.81471	33989.46539	1546.57	4000	15.14	9.7767E-06	9.7767E-06	1.79E-04	0.9992	3.16E-03	1.05E-08	3.39E-06
18	Bayonets (Line E, F)	9	(i) U-tube change - small event	162	60	1.601	2.0384565	0.5940293	37814.15547	62596.10771	1546.57	4000	15.14	9.7767E-06	9.7767E-06	1.79E-04	0.9992	3.16E-03	1.57E-08	5.09E-06
19	Manual valves on instrumentation	6	(i) External leak.	10	4.5	0.132	0.1680676	7.631928	2776.468249	673.6971129	673.70	4000	17.97	6.9275E-08	6.9275E-08	1.00E-08	0.9992	3.16E-03	4.15E-15	1.90E-10
		6	(ii) Rupture	40	5	0.132	0.1680676	7.6749851	5568.579498	2660.346668	1546.57	4000	15.14	9.7767E-06	9.7767E-06	5.00E-10	0.9992	3.16E-03	2.93E-14	9.49E-12
20	Bleed valves MV-610T, 612T, 800T, 801T	4	(i) External leak.	10	5	0.04908739	0.0625	1.6408791	478.7511649	486.2750624	486.28	4000	18.72	1.8618E-08	1.8618E-08	1.00E-08	0.9992	3.16E-03	7.44E-16	1.27E-10
		4	(ii) Rupture	40	5	0.04908739	0.0625	7.6749851	2070.810287	989.3141039	989.31	4000	16.84	5.0659E-07	5.0659E-07	5.00E-10	0.9992	3.16E-03	1.01E-15	6.33E-12
21	Bleed valves MV-614T, 616T, 802T, 803T, 804T, 805T	6	(i) External leak.	275	40	0.132	0.1680676	1.4234816	6288.076954	10675.36555	1546.57	4000	15.14	9.7767E-06	9.7767E-06	1.00E-08	0.9992	3.16E-03	5.86E-13	1.90E-10
		6	(ii) Rupture	275	40	0.132	0.1680676	1.4234816	6288.076954	10675.36555	1546.57	4000	15.14	9.7767E-06	9.7767E-06	5.00E-10	0.9992	3.16E-03	2.93E-14	9.49E-12
22	Cryogenic valves (Line B) Cooldown return+other	4	(i) External leak.	10	4.5	0.0155	0.0197352	7.631928	326.0246808	79.1083731	79.11	4000	20.59	7.0717E-10	7.0717E-10	1.00E-08	0.9992	3.16E-03	2.83E-17	1.27E-10
		4	(ii) Rupture	40	5	0.6137	0.7813871	7.6749851	25889.6714	12368.59659	1546.57	4000	15.14	9.7767E-06	9.7767E-06	5.00E-10	0.9992	3.16E-03	1.95E-14	6.33E-12
23	Cryogenic valves (Line D) Cooldown return +other	6	(i) External leak.	36.75	8	0.0155	0.0197352	1.6483097	290.4567151	379.9633655	379.96	4000	19.18	8.405E-09	8.405E-09	1.00E-08	0.9992	3.16E-03	5.04E-16	1.90E-10
		6	(ii) Rupture	275	8	0.6137	0.7813871	8.2436832	70353.34708	103121.7389	1546.57	4000	15.14	9.7767E-06	9.7767E-06	5.00E-10	0.9992	3.16E-03	2.93E-14	9.49E-12
24	Cryogenic valves (Line F) Cooldown return +other	5	(i) External leak.	162	80	0.0155	0.0197352	0.4478302	317.8685363	523.4752927	523.48	4000	18.57	2.4376E-08	2.4376E-08	1.00E-08	0.9992	3.16E-03	1.22E-15	1.58E-10
		5	(ii) Rupture	275	80	0.6137	0.7813871	0.7244008	20855.16264	34787.3551	1546.57	4000	15.14	9.7767E-06	9.7767E-06	5.00E-10	0.9992	3.16E-03	2.44E-14	7.91E-12
25	Liquid helium bath in HB650	2	(i) Vacuum loss + pipe rupture	53	6.9	–	–	3.4913836	14434.72331	13581.55401	1546.57	4000	15.14	9.7767E-06	9.7767E-06	1.00E-14	0.9992	3.16E-03	1.95E-19	6.33E-17
		2	(ii) rupture disk + pipe rupture	15	6.9	--	--	1.0679185	47196.36973	64056.33246	1546.57	4000	15.14	9.7767E-06	9.7767E-06	1.50E-12	0.9992	3.16E-03	2.93E-17	9.49E-15
26	Liquid helium bath in SSR1	1	(i) Vacuum loss + pipe rupture	53	6.9	–	–	3.4913836	14434.72331	13581.55401	1546.57	4000	15.14	9.7767E-06	9.7767E-06	1.00E-14	0.9992	3.16E-03	9.77E-20	3.16E-17
		1	(ii) rupture disk + pipe rupture	15	6.9	--	--	1.0679185	47196.36973	64056.33246	1546.57	4000	15.14	9.7767E-06	9.7767E-06	1.50E-12	0.9992	3.16E-03	1.47E-17	4.75E-15
27	LP header warm 6" NPS	10	(i) Small leak, 10mm2	10	300	0.0155	0.0197352	0.0170425	15.4063374	25.11104497	25.11	4000	20.87	4.3608E-10	4.3608E-10	1.50E-08	0.9992	3.16E-03	6.54E-17	4.75E-10
		10	(ii) Large leak, 1000mm2	10	300	1.55	1.9735213	0.0170425	1540.63374	2511.104497	1546.57	4000	15.14	9.7767E-06	9.7767E-06	1.50E-09	0.9992	3.16E-03	1.47E-13	4.75E-11
		10	(iii) Rupture	10	300	31.74	40.412623	0.0170425	31548.20316	51420.93984	1546.57	4000	15.14	9.7767E-06	9.7767E-06	4.50E-10	0.9992	3.16E-03	4.40E-14	1.42E-11
28	HP header warm 1/2" NPS	2	(i) Small leak, 10mm2	275	300	0.0155	0.0197352	0.1982314	275.5407817	447.887547	447.89	4000	18.89	1.4032E-08	1.4032E-08	1.50E-08	0.9992	3.16E-03	4.21E-16	9.49E-11
		2	(iii) Rupture	275	300	0.19634954	0.25	0.1982314	3490.471352	5673.710593	1546.57	4000	15.14	9.7767E-06	9.7767E-06	4.50E-10	0.9992	3.16E-03	8.79E-15	2.85E-12
29	Warm HP Helium supply valves	2	(i) External leak.	275	300	0.0155	0.0197352	0.1982314	275.5407817	447.887547	447.89	4000	18.89	1.4032E-08	1.4032E-08	1.00E-08	0.9992	3.16E-03	2.80E-16	6.33E-11
		2	(ii) Rupture	275	300	0.19634954	0.25	0.1982314	3490.471352	5673.710593	1546.57	4000	15.14	9.7767E-06	9.7767E-06	1.00E-08	0.9992	3.16E-03	1.95E-13	6.33E-11
29	Warm HP Helium flanges	4	(i) External leak.	275	300	0.0155	0.0197352	0.1982314	275.5407817	447.887547	447.89	4000	18.89	1.4032E-08	1.4032E-08	4.00E-07	0.9992	3.16E-03	2.24E-14	5.06E-09
		4	(ii) Rupture	275	300	0.19634954	0.25	0.1982314	3490.471352	5673.710593	1546.57	4000	15.14	9.7767E-06	9.7767E-06	1.00E-09	0.9992	3.16E-03	3.91E-14	1.27E-11
30	Nitrogen header	13	(i) Small leak, 10mm2	65	300	0.0155	0.0197352	89.3895	2844.67907	2.828747923	2.83	4000	20.99	3.5586E-10	3.5586E-10	1.50E-08	0.9992	3.16E-03	6.93E-17	6.17E-10
		13	(ii) Rupture	65	300	0.3568	0.4542919	89.3895	65482.67693	65.11595218	65.12	4000	20.66	6.2467E-10	6.2467E-10	4.50E-10	0.9992	3.16E-03	3.65E-18	1.85E-11
		6	(iii) manual valve external leak	65	300	0.0155	0.0197352	89.3895	2844.67907	2.828747923	2.83	4000	20.99	3.5586E-10	3.5586E-10	4.50E-10	0.9992	3.16E-03	9.60E-19	8.55E-12
		6	(iv) Manual valve rupture	65	300	0.19634954	0.25	89.3895	36035.57609	35.83376489	35.83	4000	20.81	4.8052E-10	4.8052E-10	4.50E-10	0.9992	3.16E-03	1.30E-18	8.55E-12
																	sum column		2.97E-08	9.65E-06
																	Total result		9.68E-06	
																	ODH Class		1	

ODH Analysis

Indico – SDP doc#08

- The PIP2IT cave is currently classified as ODH 2
  - Due to a low pressure component in HWR, the 2K bath must be vented into the cave leading to the ODH Class
- Based on the assumption that the 650MHz Cryomodule 2K rupture disk will relieve outside the cave
  - ODH Class will change from ODH 2 to ODH 1

Total result	9.68E-06
ODH Class	1

Quality Control

- Draft QC Plan on Indico-SDP doc#17, maintained in TC ED0011285
- Being developed with PIP-II QC group
  - Joe Hurd worked with Tom Digrazia
  - Reviewed draft, compared with PIPII standards for QC
  - QC draft updated to PIPII standards, ready for final review
- Goals of the QC document
  - List Code and Standards for this Intermediate Transfer line
  - List Inspections and tests to be completed
  - Lay out common fabrication practices and guidelines to be followed

Draft Schedule

Full P6 schedule for 650 Test Stand on Indico – SDP doc#09

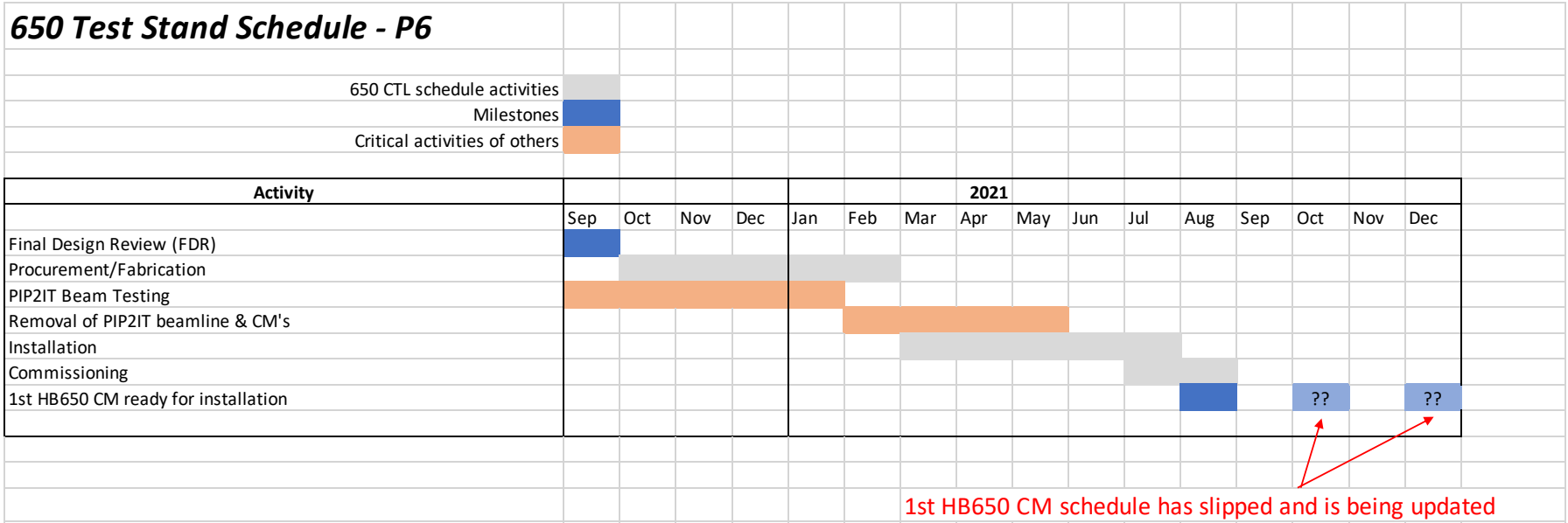

- 650 Test Stand P6 Baseline Schedule
  - Procurement/Fabrication – 5 months
  - Installation – 5 months
  - Ready for 1st CM installation in Aug. (CM now delayed until Oct. or Dec?)
- 650 CTL schedule fits well within the baseline schedule
  - Completion (System ready for cooldown – end of July)
  - Push out of CM delivery adds additional cushion to CTL schedule

Validation Plan/Schedule

- Validation Plan is a combination of
  - Detailed procurement/fab./install. schedule – SDP doc#18
    - see next slides
  - QC Plan – SDP doc#17
  - U-tube insertion procedure - SDP doc#19
  - Draft CTL Piping Note – SDP doc#16

Detailed CTL Schedule – Page 1

ID	Task Name	Duration	Start	Finish	Predeces
1	**Final Design Review**	**14 days**	**Wed 9/16/20**	**Mon 10/5/20**	
2	**MS: Final Design Review**	0 days	Wed 9/16/20	Wed 9/16/20	
3	Respond to FDR Recommendations	14 days	Wed 9/16/20	Mon 10/5/20	2
4	**HB650 CTL Fabrication**	**87 days**	**Tue 10/6/20**	**Wed 2/3/21**	
5	Finalize Detailed Drawings	10 days	Tue 10/6/20	Mon 10/19/20	3
6	Create BOM	2 days	Tue 10/20/20	Wed 10/21/20	5
7	Procure, receive and inspect parts (QC)	22 days	Thu 10/22/20	Fri 11/20/20	6
8	Machine Parts	20 days	Mon 11/23/20	Fri 12/18/20	7
9	Part Preperation	5 days	Mon 11/23/20	Fri 11/27/20	7
10	Build (6) Bayonets	5 days	Mon 11/30/20	Fri 12/4/20	9
11	Staging Assembly	5 days	Mon 12/21/20	Fri 12/25/20	10,8
12	Weld Internal Lines and perform Weld Inspections (QC)	5 days	Mon 12/28/20	Fri 1/1/21	11
13	Reverse leak Check Subcomponents (QC)	5 days	Mon 1/4/21	Fri 1/8/21	12
14	Prepare and Wrap MLI	5 days	Mon 1/4/21	Fri 1/8/21	12
15	Weld Vacuum Jacket	5 days	Mon 1/11/21	Fri 1/15/21	14
16	Weld Pipe Stands	2 days	Mon 1/18/21	Tue 1/19/21	15
17	Final Leak Check (QC)	3 days	Mon 1/18/21	Wed 1/20/21	15
18	Prepare Pressure Test Equipment	2 days	Thu 1/21/21	Fri 1/22/21	17
19	Draft Piping Note and Pressure Test Permit Form	10 days	Mon 1/4/21	Fri 1/15/21	12
20	Review Draft Piping Note and Approve Pressure Test Permit	5 days	Mon 1/18/21	Fri 1/22/21	19
21	Pressure Test (QC)	1 day	Mon 1/25/21	Mon 1/25/21	20,17
22	Finalize Piping Note	2 days	Tue 1/26/21	Wed 1/27/21	21
23	Review and Approve Note	5 days	Thu 1/28/21	Wed 2/3/21	22
24	**MS: CTL Fabrication Completed**	0 days	Wed 2/3/21	Wed 2/3/21	23
25	**MS: CMTF Cave Ready**	0 days	Fri 2/26/21	Fri 2/26/21	
26	**HB650 CTL Installation**	**10 days**	**Fri 2/26/21**	**Thu 3/11/21**	

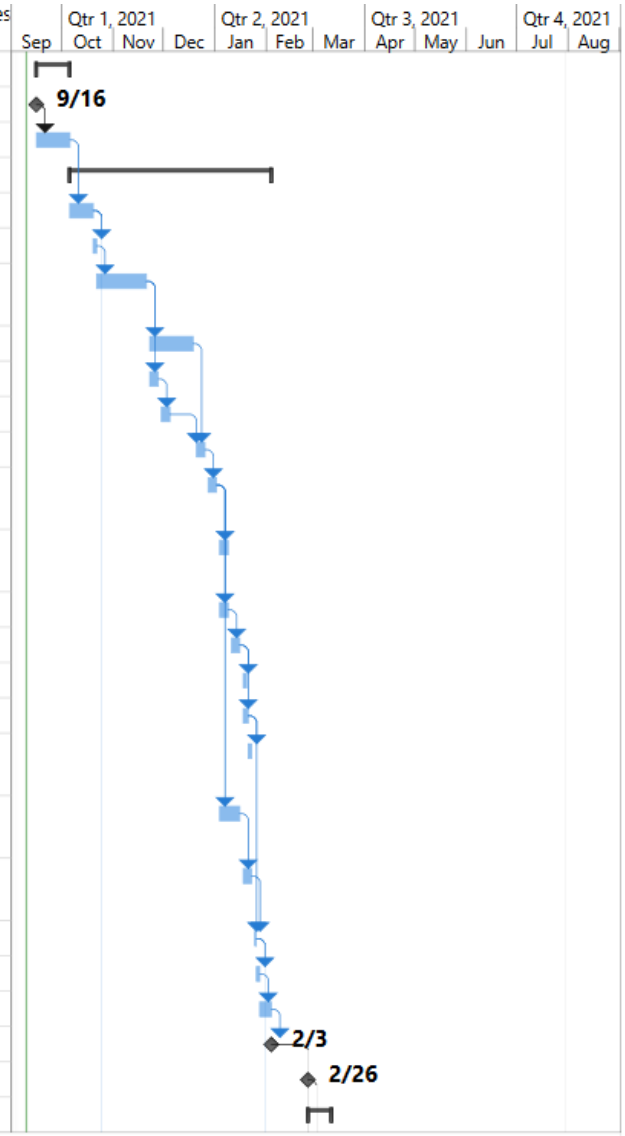

Detailed CTL Schedule – Page 2

ID	Task Name	Duration	Start	Finish	Predeces
27	Install CTL into Cave	10 days	Fri 2/26/21	Thu 3/11/21	25,24
28	**MS: HB650 CTL Installed**	0 days	Thu 3/11/21	Thu 3/11/21	27
29	**U-tube Design and Fabrication**	**182 days**	**Tue 10/20/20**	**Wed 6/30/21**	
30	Survey Bayonet Locations	2 days	Fri 3/12/21	Mon 3/15/21	28
31	U-tube Design and Preliminary Parts List	20 days	Tue 10/20/20	Mon 11/16/20	5
32	Procure, receive and inspect parts (QC)	15 days	Tue 1/26/21	Mon 2/15/21	31,21
33	Machine Parts	10 days	Tue 2/16/21	Mon 3/1/21	32
34	Modify U-tube Drawings	15 days	Tue 3/16/21	Mon 4/5/21	30
35	Part Preperation	5 days	Tue 4/6/21	Mon 4/12/21	32,34
36	Fabricate (8) U-tubes and perform Weld Inspections (QC)	33 days	Tue 4/13/21	Thu 5/27/21	35,33
37	Leak Check U-tubes (QC)	5 days	Fri 5/28/21	Thu 6/3/21	36
38	Prepare Pressure Test Equipment	1 day	Fri 6/4/21	Fri 6/4/21	37
39	Draft Piping Note and Pressure Test Permit Form	10 days	Tue 4/6/21	Mon 4/19/21	34
40	Review Draft Piping Note and Approve Pressure Test Permit	5 days	Tue 4/20/21	Mon 4/26/21	39
41	Pressure Test (QC)	1 day	Mon 6/7/21	Mon 6/7/21	38,40
42	Finalize Piping Note	2 days	Tue 6/8/21	Wed 6/9/21	41
43	Review and Approve Note	5 days	Thu 6/10/21	Wed 6/16/21	42
44	Install U-tubes	2 days	Tue 6/8/21	Wed 6/9/21	41
45	Finalize U-tube Piping Notes	5 days	Thu 6/10/21	Wed 6/16/21	44
46	Review and Approve Notes	10 days	Thu 6/17/21	Wed 6/30/21	45
47	**Cryogenic Safety Review**	**21 days**	**Thu 7/1/21**	**Thu 7/29/21**	
48	Finalize Cryo Safety Review Documentation	5 days	Thu 7/1/21	Wed 7/7/21	46,43
49	Cryo Safety Review Walkthrough and ORC Recommendation	15 days	Thu 7/8/21	Wed 7/28/21	48
50	Division ORC Approval	1 day	Thu 7/29/21	Thu 7/29/21	49
51	**MS: Cooldown Ready**	0 days	Thu 7/29/21	Thu 7/29/21	50

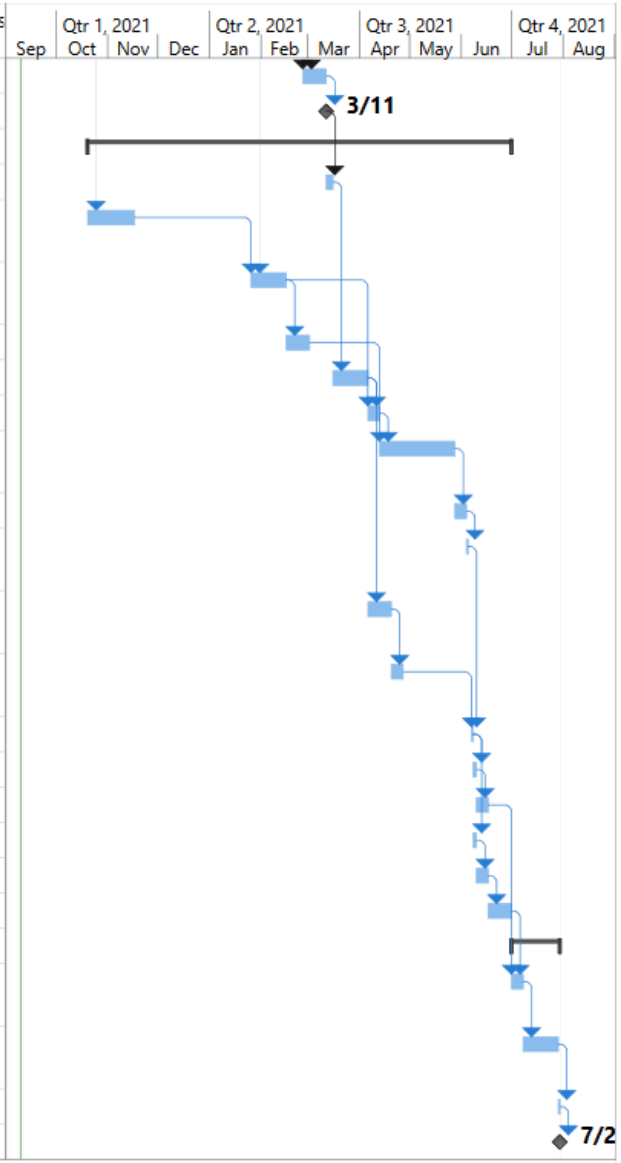

Next Steps

- From the PDR, the following was addressed
  - ~~Optimize/finalize location of 650 CTL (vertical and horizontal) to maximize accessibility~~
  - ~~Design support stand for 650 CTL~~
  - ~~Complete relief calculations for Cryogenic process piping~~
  - ~~Parallel plate relief for transfer line~~
  - Finalize u-tube design
  - ~~Update all calculations, models, and drawings to a final state~~
  - ~~Finalize QC Plan~~

Summary

- The 650 CTL design has progressed well
  - The design is simple and straight forward

- We believe the design and documentation are now at a final stage, and that all recommendations from the PDR have been addressed

- We feel we are ready to move into the procurement/fabrication phase of the 650 Intermediate Cryogenic Transfer Line

- Thank You!