FORWARD PHYSICS AND BSM

Open Questions and New Ideas

Snowmass Energy Frontier Workshop

Jonathan Feng, UC Irvine, 21 July 2020

NSF
SIMONS FOUNDATION
HEISING-SIMONS FOUNDATION
UC IRVINE

THE BSM LANDSCAPE

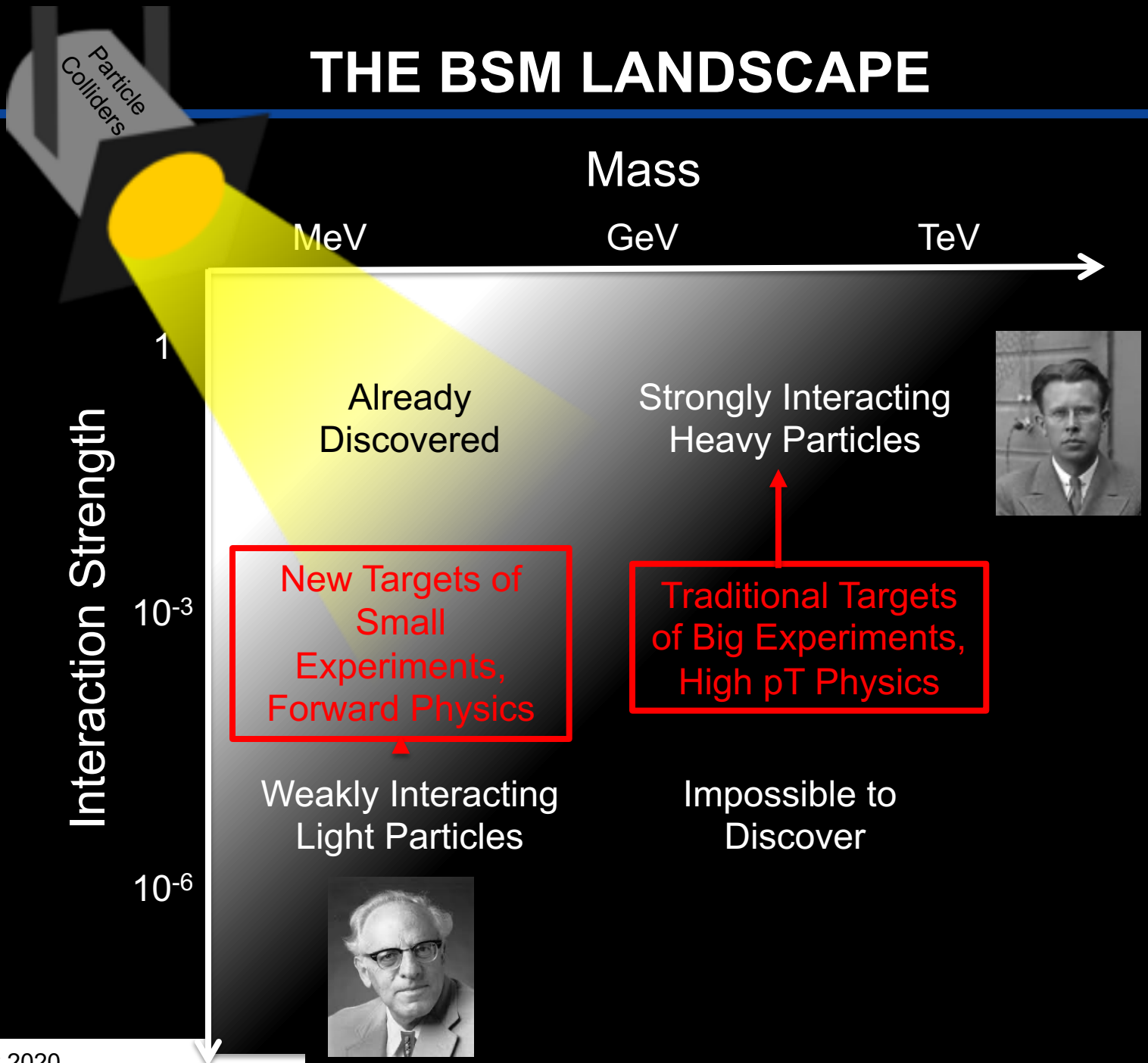

FORWARD PHYSICS AND NEW PHYSICS

- As the LHC runs at higher energies and much higher luminosities in the next 15 years, how can its potential be maximally exploited?

- For decades, attention has focused on high p_T , low cross section (fb, pb, nb) physics.

- But the total cross section is ~100 mb, and most of it and most of the highest energy particles are in the far forward region at low p_T .

- In recent years, it has become clear that **there is an entire physics program that remains to be explored in the far forward region**, and this can be done with relatively small additional investments.

- **The proposal: create a Forward Physics Facility for the HL LHC.** Enlarge an existing cavern in the far forward region of ATLAS to house a suite of experiments with groundbreaking new capabilities for neutrinos, BSM searches, QCD, dark matter, dark sectors, and cosmic rays.

SM AND BSM PHYSICS POTENTIAL

- SM: There is a large flux of TeV neutrinos at the LHC
  - Most of these escape the detector along the beam collision axis; no collider neutrino has ever been detected
  - Rich SM physics program: νs / anti-νs of all flavors ($\pi \to \nu_\mu$, $K \to \nu_e$, $D \to \nu_\tau$)

  And BSM physics program: new probes with neutrinos at TeV energies

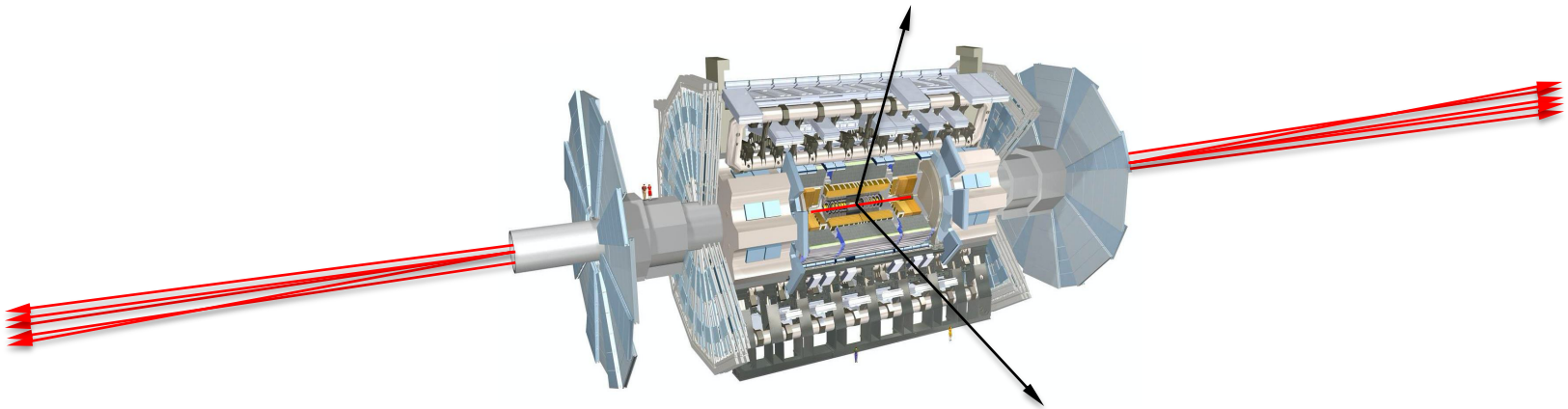

- BSM: In many models, weakly-interacting particles with MeV-GeV masses are also preferentially produced along the beam collision axis
  - They escape the detector, may also decay far away (LLPs)
  - Rich BSM physics program: $\pi \to$ dark photon, $B \to$ dark Higgs, $\gamma \to$ ALP, etc.

LHC TUNNELS

- LHC tunnel infrastructure; HL-LHC tunnels in red (artist's rendition)

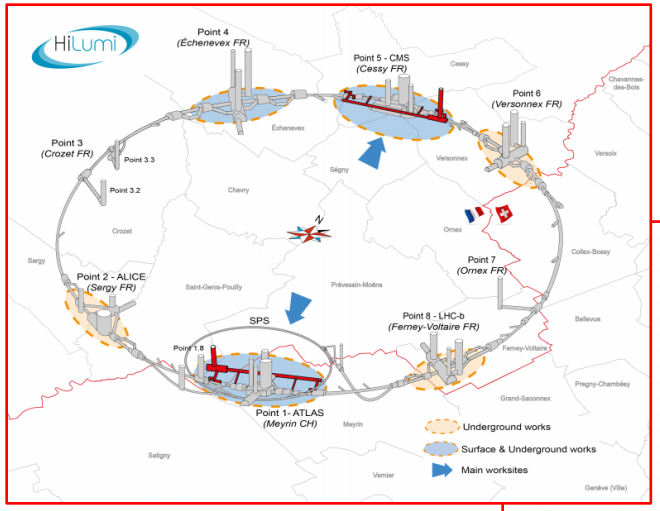

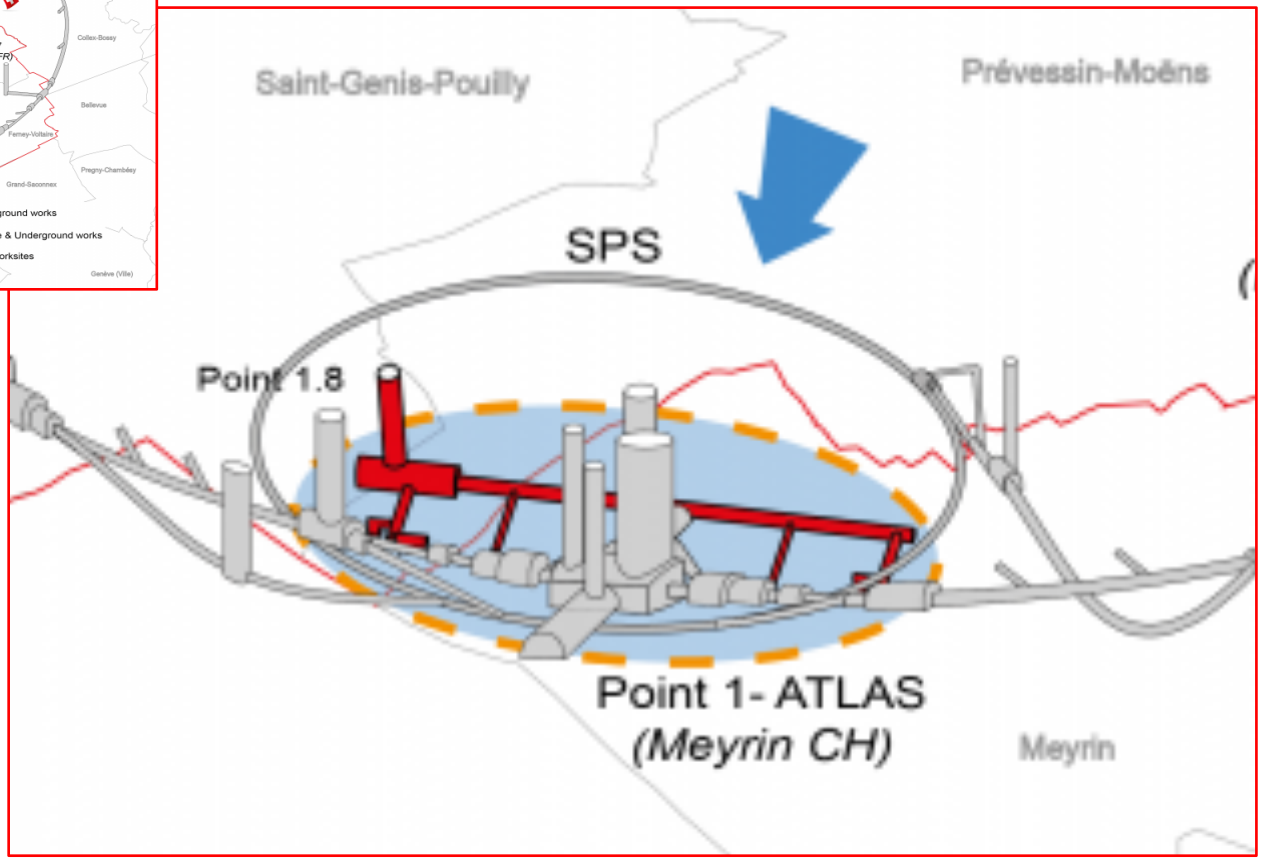

BEAM COLLISION AXIS

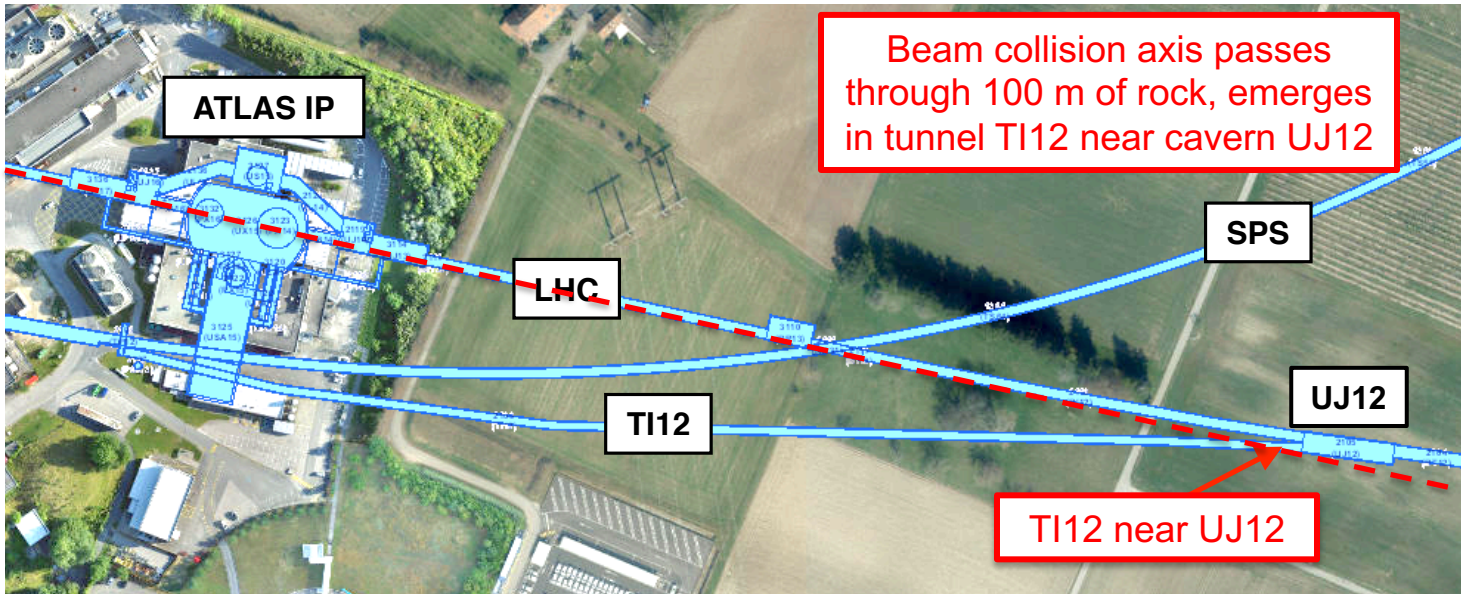

FORWARD PHYSICS FACILITY

- A few experiments are under construction or proposed for this location. But they are severely limited by the tunnels and infrastructure that were created long ago (in the 1980's for LEP!) and long before the physics potential of this space was appreciated.

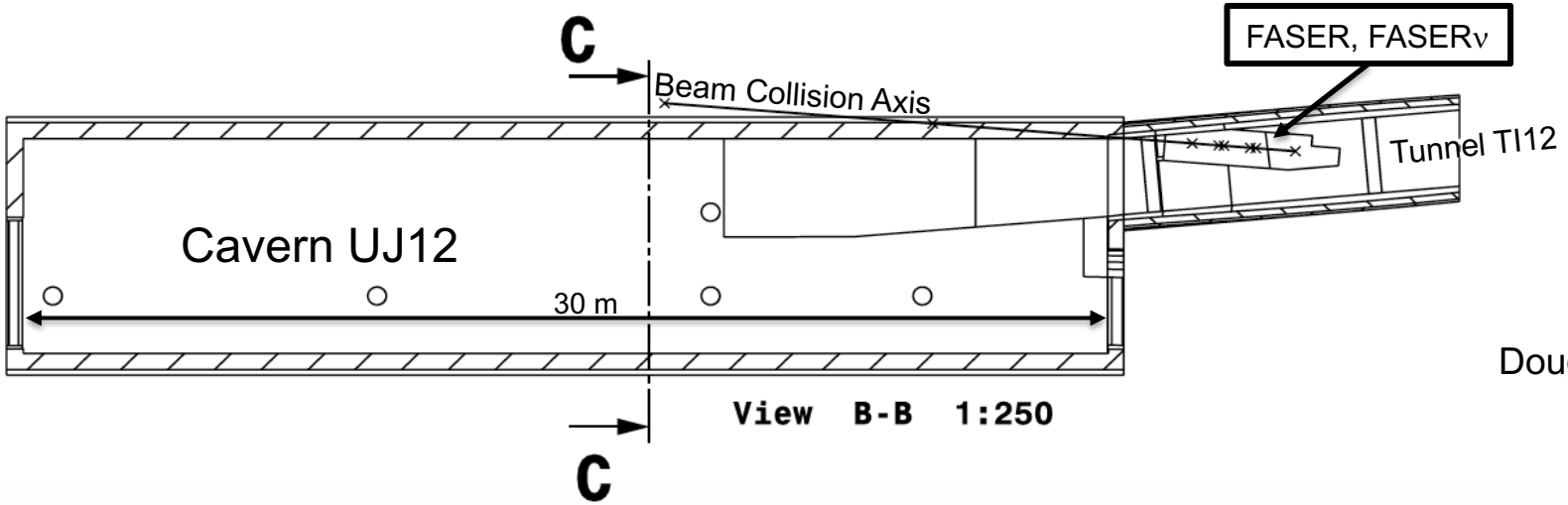

Dougherty (2020)

FORWARD PHYSICS FACILITY

- More generally, the potential of “external” detectors (MoEDAL, FASER, milliQan, Codex-b, MATHUSLA, FMS, …) is increasingly appreciated.

- They all require surveying, civil engineering, and support services that are currently being developed piecemeal.

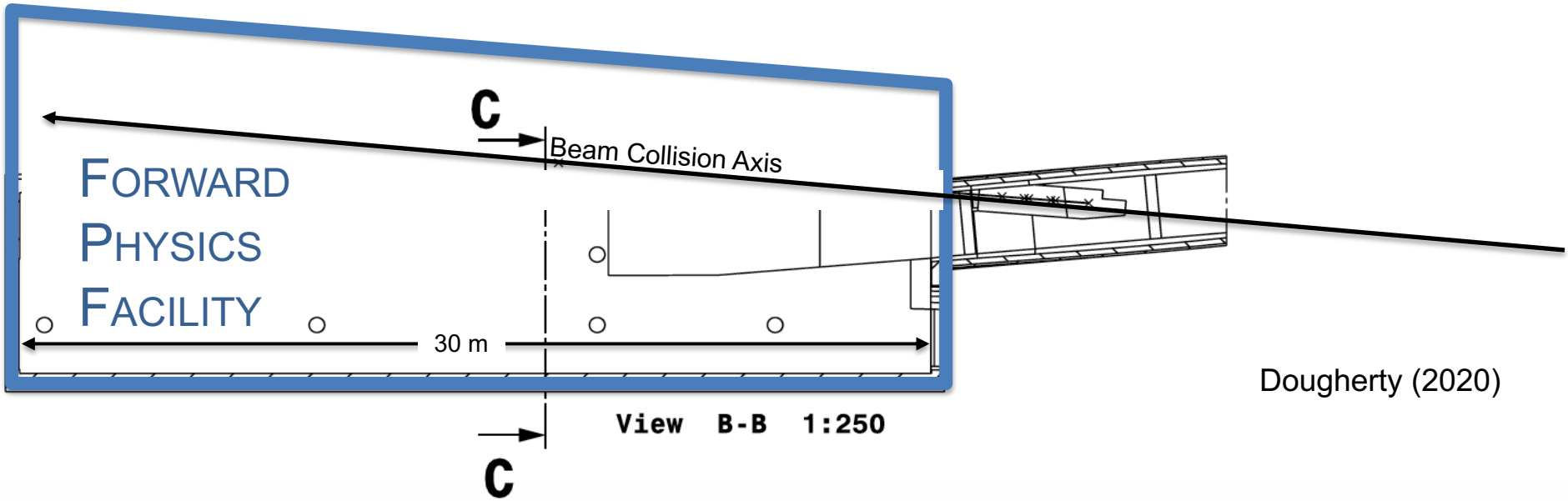

Dougherty (2020)

- The Forward Physics Facility would consolidate many of these activities, support a suite of far forward experiments, and lead to a huge gain in sensitivity to new physics, neutrino studies, and hadronic physics.

UJ12 AND UJ 18 CAVERNS

- The Forward Physics Facility would require widening a pre-existing cavern, UJ12 or UJ18, by a few meters.

- Requires civil engineering near the LHC beam, but not much compared to what has already been invested in the HL LHC.

WHAT'S IT GOOD FOR?

- FASER and FASERν are approved, funded, under construction for Run 3.
  - 50cm deep trench puts the detectors on axis. Coverage: $\eta > 9$, total length: 6 m.
  - FASER: tracker and calorimeter, detects LLP decay to pair of TeV charged tracks. Background negligible (FLUKA simulations validated by prototype detector in 2018).
  - FASERν: emulsion detector, detects CC and NC neutrino interactions.

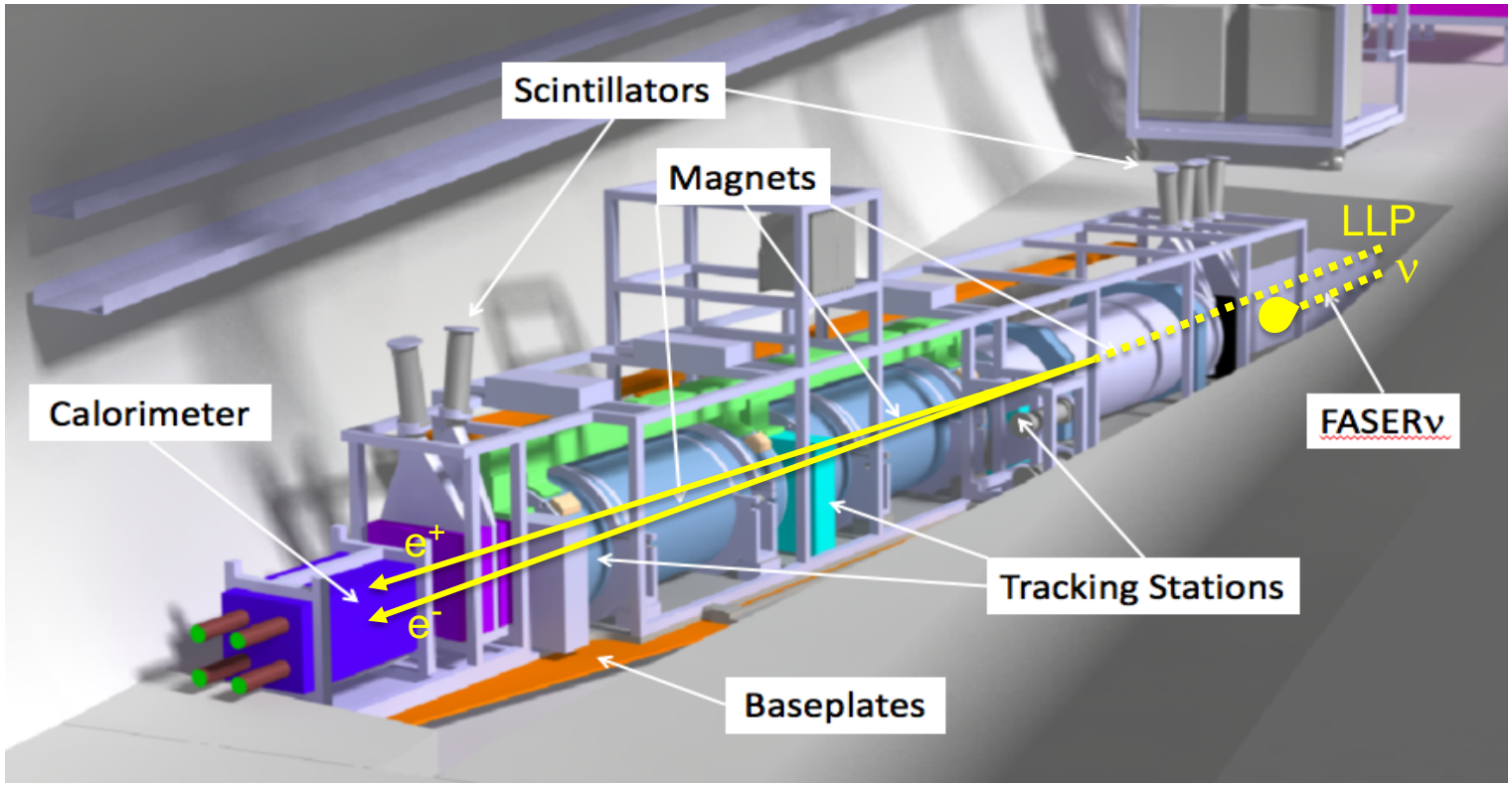

- SND@LHC also been proposed as a (slightly) off-axis ν expt in TI18.

NEUTRINO PHYSICS

- No collider neutrino has ever been detected.
- 1984: de Rujula and Ruckl: to detect neutrinos, look in the forward direction.
- 2018: FASER pilot ~30 kg emulsion detectors collected 12.5 fb^{-1} on the beam collision axis (installed and removed during Technical Stops).
- 2020: Expect ~10 neutrino interactions. Several neutral vertices identified, likely to be neutrinos. Analysis ongoing.

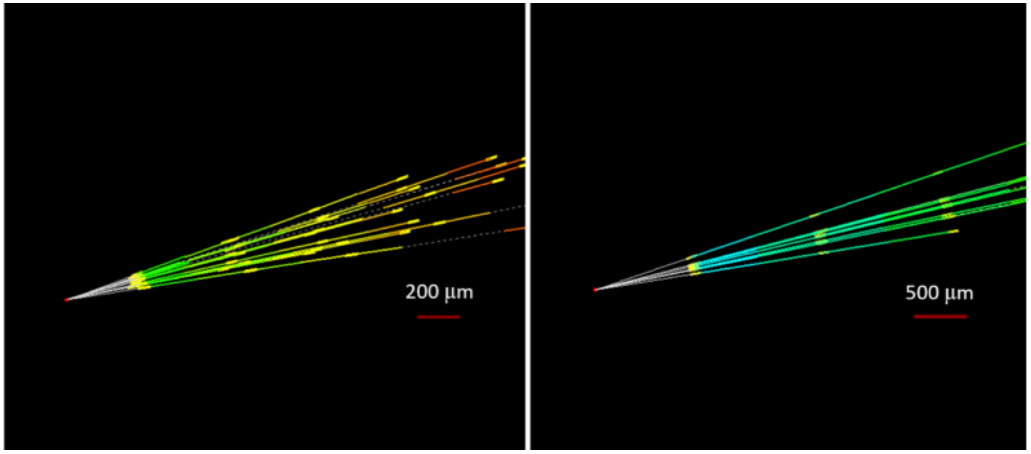

NEUTRINO PHYSICS

- 2021-24: FASERν will collect data with 1.3 ton tungsten/emulsion in Run 3
  - Detect ~1000 ν_e, ~10,000 ν_μ, and ~10 ν_τ.
  - Probe neutrino properties at energies E_ν ~ TeV, first direct exploration of this energy range for all 3 flavors.

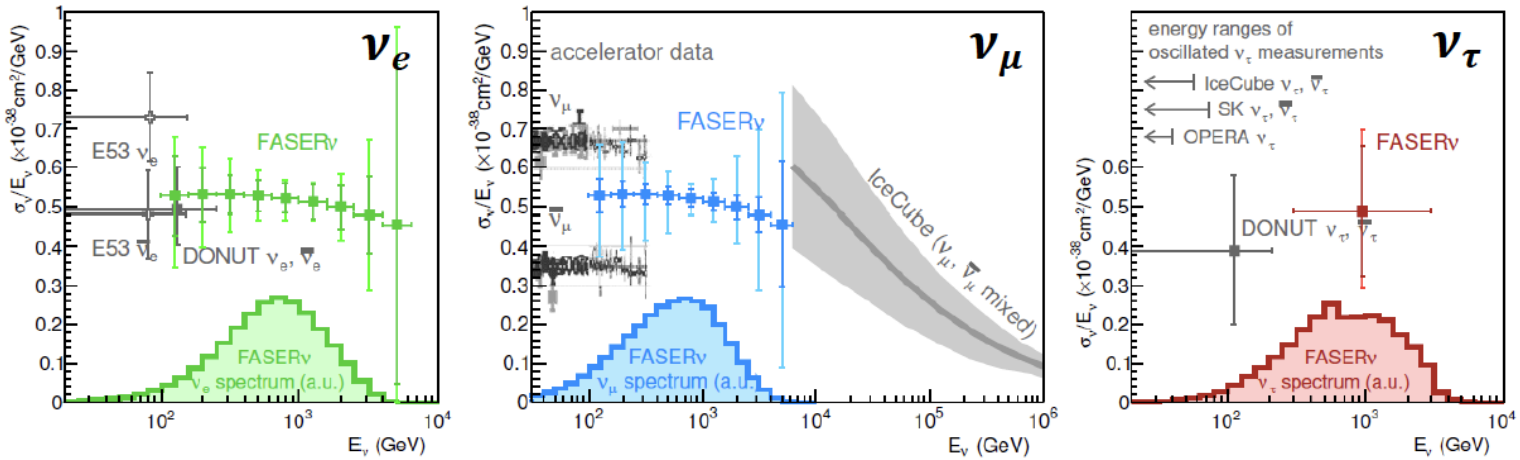

FASER Collaboration 1908.02310 (2019)

- 2027-36: With Forward Physics Facility, can upgrade to ~10 tons in HL-LHC
  - Detect ~100,000 ν_e, ~1,000,000 ν_μ, and ~1000 ν_τ.
  - Study production, propagation, and interactions for all 3 ν flavors, lepton universality, ν oscillations, ν_τ magnetic moment, NSI, neutrino tridents, …
  - FPF will open up a new world of TeV neutrino physics at colliders.

QCD PHYSICS

- The forward production of hadrons is currently subject to large uncertainties. Experiments at a Forward Physics Facility would provide useful insights.

See Garzelli, Kling, EF5/EF6/EF7 brainstorming session

  - Accommodate both on-axis and off-axis neutrino detectors, which provide complementary information ($\pi \to \nu_\mu$, $K \to \nu_e$, $D \to \nu_\tau$).
  - Different target nuclei (lead, tungsten) to probe different nuclear pdfs
  - Strange quark pdf through $\nu s \to lc$
  - Forward charm production, intrinsic charm
  - Refine simulations that currently vary greatly (EPOS-LHC, QGSJET, DPMJET, SIBYLL, PYTHIA…)
  - Essential input to astroparticle experiments; e.g., distinguish galactic neutrino signal from atmospheric neutrino background at IceCube
  - New ideas?

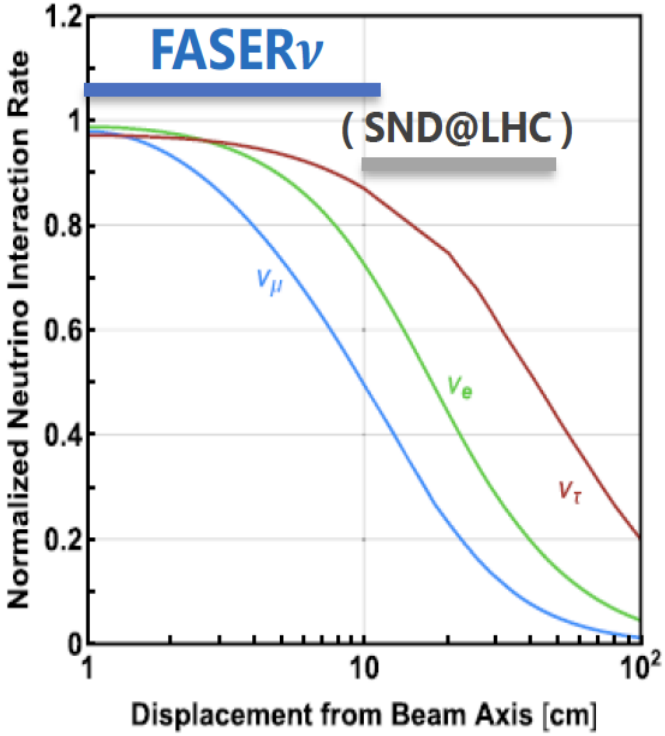

BSM PHYSICS

- FASER probes new parameter space in many models with just 1 fb^{-1}. Simply running through HL LHC will extend sensitivity by ~3000.

- With a Forward Physics Facility, could upgrade FASER (R=10cm, L=1.5m, Run 3) → FASER 2 (R=1m, L=5m, HL LHC), extending sensitivity by ~10^6, complementary to other experiments.

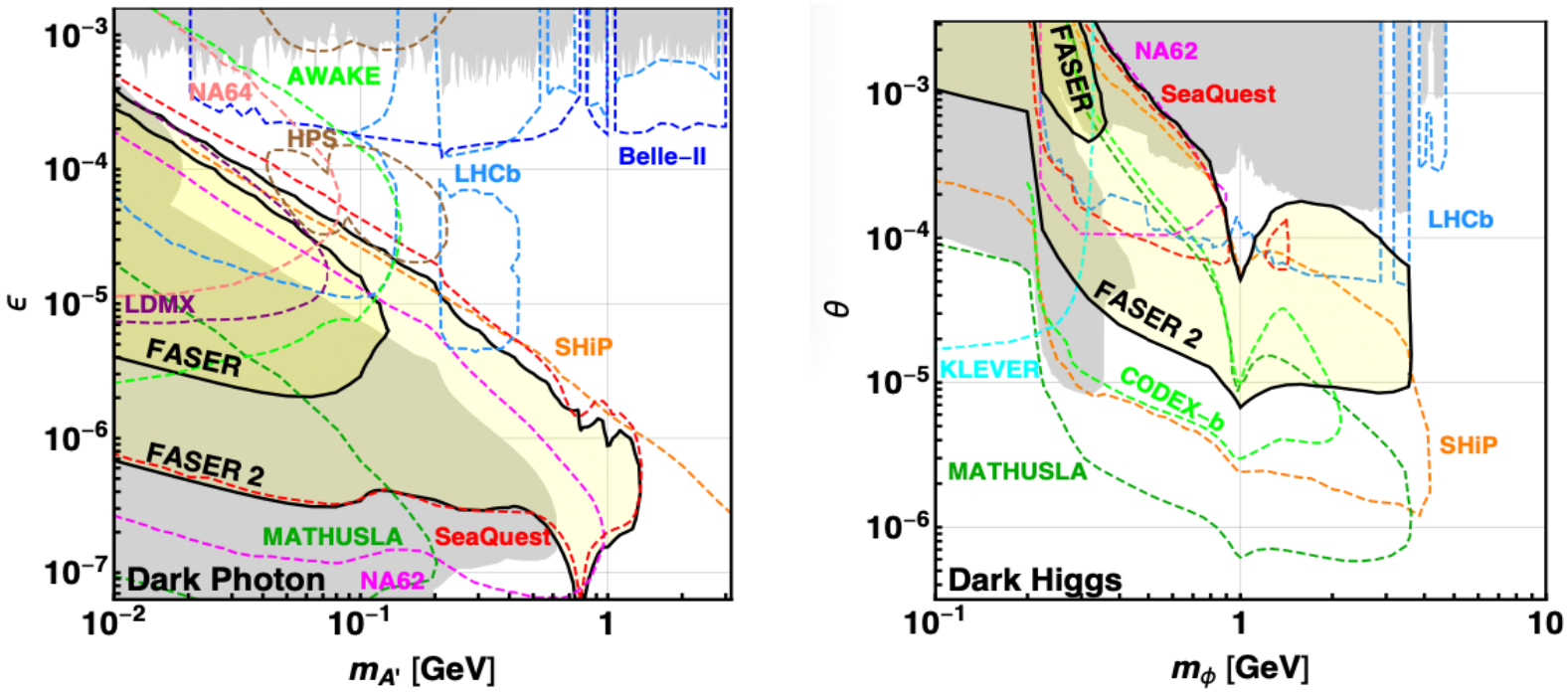

FASER Collaboration, 1811.12522 (2018)

LLP SEARCHES

- With a Forward Physics Facility, there is discovery potential for all portal particles (dark photons, dark Higgs bosons, heavy neutral leptons), ALPs with all types of couplings (photon, fermion, gluon), and many other models.

Benchmark Model	Label	Section	PBC	Refs	FASER	FASER 2
Dark Photons	V1	IV A	BC1	[7]	√	√
$B-L$ Gauge Bosons	V2	IV B	—	[30]	√	√
$L_i - L_j$ Gauge Bosons	V3	IV C	—	[30]	—	—
Dark Higgs Bosons	S1	V A	BC4	[26, 27]	—	√
Dark Higgs Bosons with hSS	S2	V B	BC5	[26]	—	√
HNLs with e	F1	VI	BC6	[28, 29]	—	√
HNLs with μ	F2	VI	BC7	[28, 29]	—	√
HNLs with τ	F3	VI	BC8	[28, 29]	√	√
ALPs with Photon	A1	VII A	BC9	[32]	√	√
ALPs with Fermion	A2	VII B	BC10	—	—	√
ALPs with Gluon	A3	VII C	BC11	—	√	√
Dark Pseudoscalars	P1	VIII	—	[36]	—	√

FASER Collaboration, 1811.12522 (2018)

SNOWMASS PLANS

- The far forward region contains an entire physics program that has been underappreciated for decades. A rich physics case has already been explored in detail and is established and mature, but many other opportunities remain to be discovered.

- For Snowmass, we would like to bring together people with diverse interests to study the physics potential and feasibility of the Forward Physics Facility at the HL LHC.

- Snowmass provides an ideal setting: this is an inherently cross-frontier topic, with relevance for EF, NF, RF, CF, TF, and AF.

- Short time window: if there is no Forward Physics Facility at the HL LHC, many of these physics opportunities will be left on the table and will disappear for decades.

- We will be writing an LOI for the Forward Physics Facility, and all are invited to join; email jlf@uci.edu.

OPEN QUESTIONS

- What other physics can be explored in the far forward region?
  - Millicharged particles (PBC Benchmark 3)? Yu-Dai Tsai
  - Invisibly decaying dark photons and dark matter detection (PBC Benchmark 2)? Brian Batell
  - Other ideas?

- What is the optimal design for each experiment?

- What is the ideal mix of experiments? Could imagine on- and off-axis LLP searches, on- and off-axis detectors targeting neutrinos and QCD, a milli-charge search experiment, an invisible decay search experiment, …

- How much space is required in UJ12 / UJ18? Is it feasible to construct the Forward Physics Facility in LS3 (2025-27)? Cost, schedule.