Design of SRF cavities at Fermilab

Andrei Lunin / Fermilab

PIP-II Technical Workshop

December 1, 2020

A Partnership of:
- US/DOE
- India/DAE
- Italy/INFN
- UK/UKRI-STFC
- France/CEA, CNRS/IN2P3
- Poland/WUST

SRF cavity design

Accelerating SRF cavity is a complicated electro-mechanical assembly and consist of:

- bare cavity (Nb shell)
- stiffening elements (ring, bars)
- LHe vessel with inlet
- frequency tuners (slow & fast)
- power and HOM couplers, field pickups

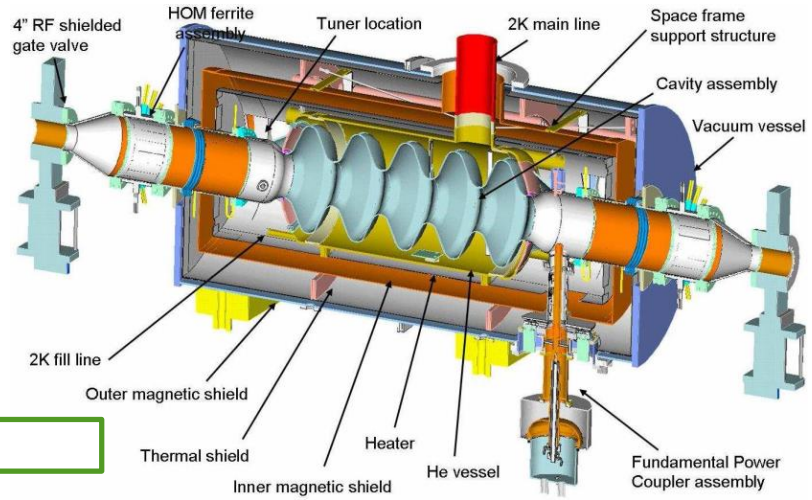

ERL 704 MHz 7-cell cavity

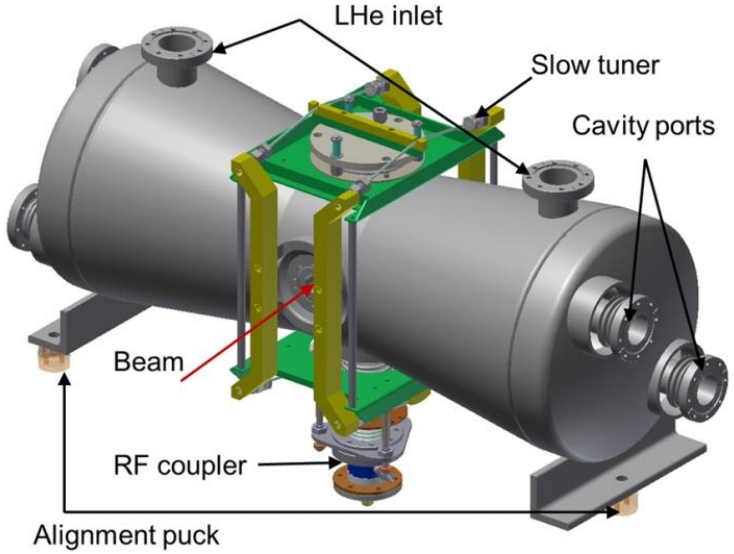

HWR 162.5 MHz cavity for PIP-II

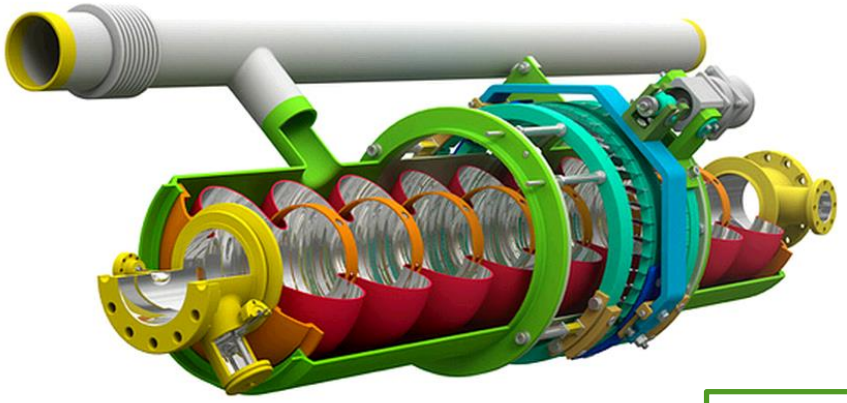

ILC 1.3 GHz 9-cell cavity

The design of SRF cavity requires a complex, self consistent electro-mechanical analysis in order to minimize microphonics and/or Lorentz force detuning phenomena and preserving a good cavity tunability simultaneously !

Specific Problems in Design of SRF Accelerating Cavities

- Acceleration efficiency
  - maximize shunt impedance (R/Q)
  - minimize surface fields (electric & magnetic)
- High Order Modes (HOMs) damping
  - incoherent effect (beam loss factors, cryogenic heat loads)
  - coherent effects (resonant excitation, emittance dilution)
- Beam dynamics
  - transverse kicks & longitudinal beam instabilities
- Operation at high gradient and small beam current
  - narrow cavity bandwidth & microphonics
  - Lorentz force detuning, dF/dP
- Field Emission
  - multipactor & dark current
- Input Power Coupler
  - external coupling
  - dynamic coupler RF losses and static heat load

Dynamic Heat Loads in the LCLS-II Production Cryomodule (CW, 0.3 nC, 1 MHz, 16 MV/m)

Loss Origin		Cavity [8]	HOM Coupler & Pickup [16+8] Rad	HOM Coupler & Pickup [16+8] Loss			Bellow [9]	Flange [8+20]	Power Coupler [8]				∑ [n] [W/CM]		
Operating Mode[1,2,3,4,5] (16 MV/m)		10.1 W [81 W]	Peak: 8 W	Peak: 0.05 W	Peak: 0.12 W	Peak: 0.34 W	3 mW [24 mW]	0.15 W [1.2 W]	0.2 W [1.6 W]	2 W [16 W]		17 W [136 W]	84 W	16.4 W	137 W
			Mean: 0.9 W [22 W]	Mean: 6 mW [0.17 W]	Mean: 15 mW [0.4 W]	Mean: 36 mW [1 W]									
HOM Resonance[6] (< 10GHz)		Peak: 0.1 W	Peak: 10 W	Peak: 0.25 W	Peak: 0.6 W	Peak: 2 W	Peak: 0.1 W	Peak: 10 mW	PC [1]	Gate Valve [2]	Spool Pipe [1]	HOM Abs [1]	0.15 W	0.05 W	0.1 W
		Mean: 1 mW [0.01 W]	Mean: 20 mW [0.5 W]	Mean: 0.5 mW [0.01 W]	Mean: 1 mW [0.02 W]	Mean: 3 mW [0.07 W]	Mean: 10 mW [0.1 W]	Mean: 1 mW [0.03 W]							
Beam Wake	Generated[7]	[12.0 W]	[0.2 W]				[0.4 W]	[0.01 W]	[0.2 W]	-	-	-	12.8 W		
	Transient Loss[7]	[0.6 W] >0.7 THz	8 mW [0.2 W]	[0.02 W]	[0.05 W]	[0.1 W]	10 mW [0.1 W]	7 mW [0.2 W]	[0.1 W] [0.5 W] [4.7 W]	0.45 W [0.9 W]	0.04 W [0.04 W]	5.5 W [5.5 W]	1.9 W	0.6 W	10.3 W
	Resistive [8] Loss (ASE)	-	-	-			30mW [0.3 W]	-	-	25 mW [0.05 W]	0.1 W [0.1 W]	[0.1 W]	0.5 W	-	0.1 W
Total Loss [W/CM]		82 W	23 W	0.2 W	0.5 W	1.2 W	0.5 W	1.4 W	1.9 W	1 W	0.15 W	147 W	87 W	17 W	148 W

2K | 5K | 70K

[n] – number of elements in cryomodule

SRF Cavity Designs (personal experience)

650 MHz high-β elliptical cavity for PIP-II

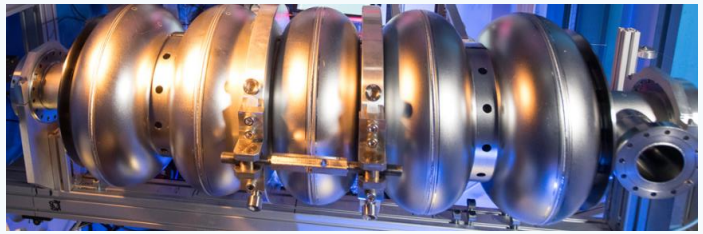

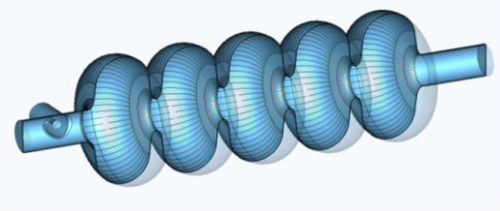

Performed analysis:

EM-optimization
HOM-damping
Incoherent losses of low-β beam

1.3 GHz and 3.9 GHz elliptical cavities for LCLS-II

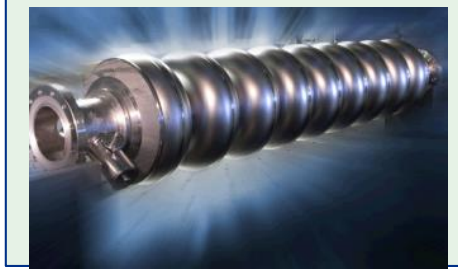

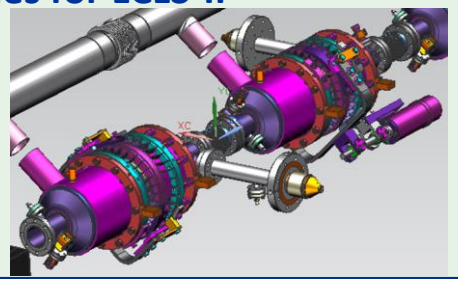

Performed analysis:

HOM-damping
HOM statistics
Couplers RF/wake kicks
Wakefields power dissipation

2.815 GHz deflecting cavity for ANL/SPX

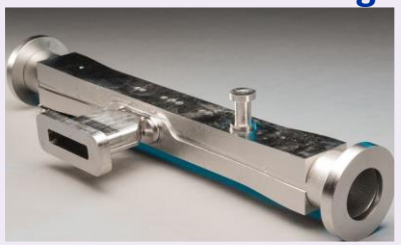

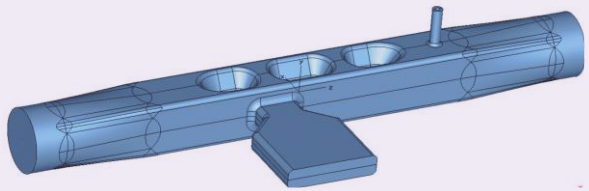

Performed analysis:

EM-optimization
HOM-damping

Modern SRF cavities cover a wide range of particle velocities (beta 0.05..1), operating frequencies (0.072...4 GHz) and beam currents (1mA…100mA, CW & Pulsed)

Simulation Workflow

1. Creation of the project 3D model
   - drawing in the CST GUI (takes time, full-parametrization, easy modification)
   - geometry import from 3rd parties' CADs (quick, need special license, limited parametrization, potential mesh problem)
2. Choosing a proper solver
   - depends on the problem, available hardware, simulation time …
3. Setting boundary conditions
   - frequency, symmetries, ports, materials, beam excitation, temperature, …
4. Checking the mesh quality
   - generate and visualize the mesh, set initial mesh size, create sub-volumes and modify models if needed, mesh fine-tuning (curvature order, surface approximation)
5. Solver fine-tuning
   - direct or iterative, parallelization, special settings, …
6. Running first simulation
   - check the results, set postprocessing steps, tune & modify the mesh, …
7. Setting optimization
   - set parameters sweep, define the goal function, simplify the model

OVER 80% OF TIME

Drawing Cavity 3D Model

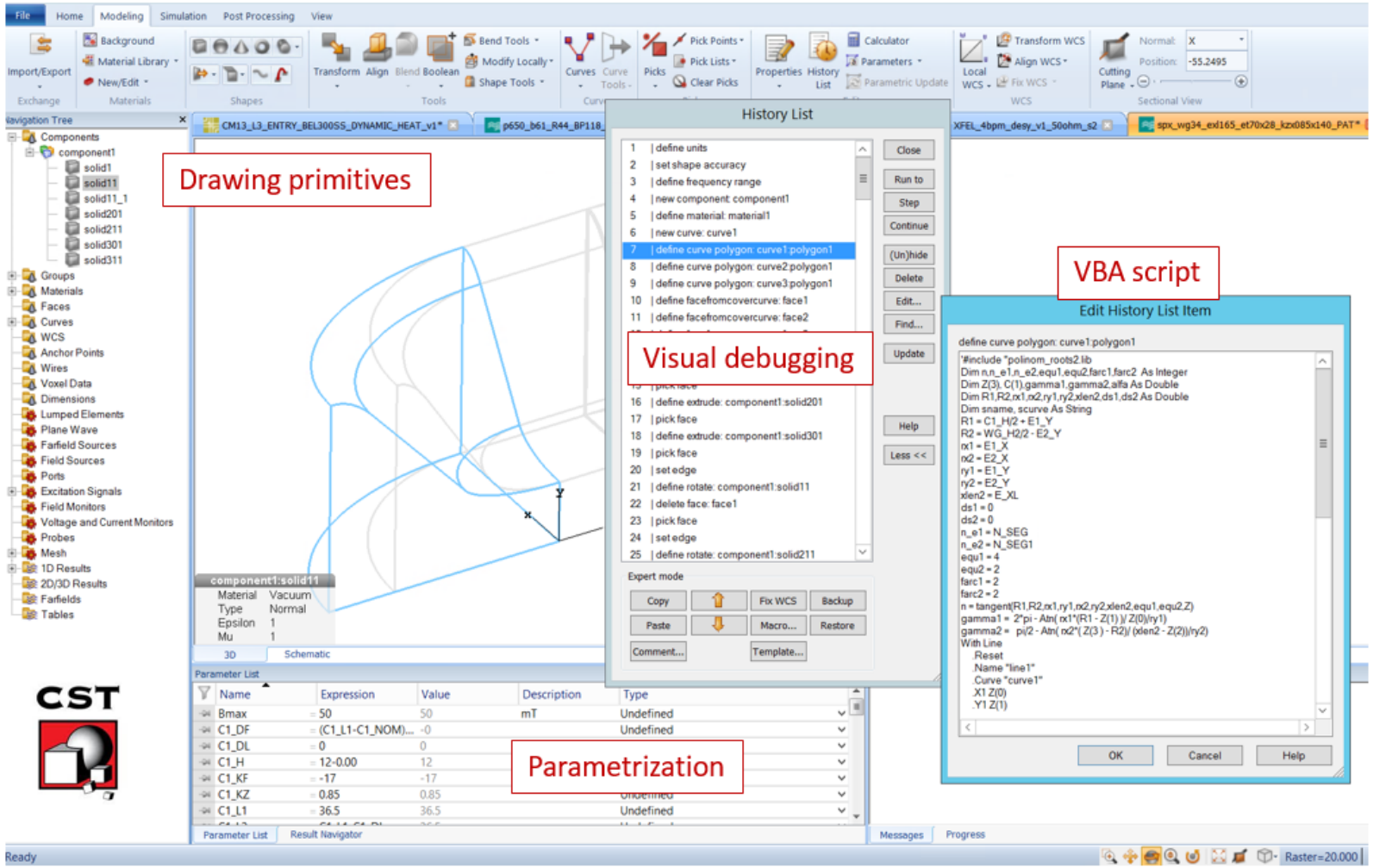

- Parametrize model from the beginning of your work!
- Python/VBA scripting helps in creating custom shapes and pre-meshing

How to Get Reliable Results

Approximations

Real cavity test stand

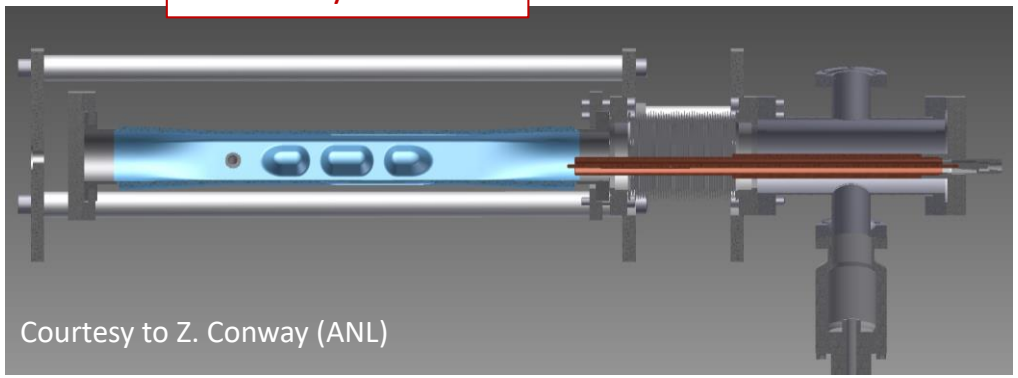

CST Model

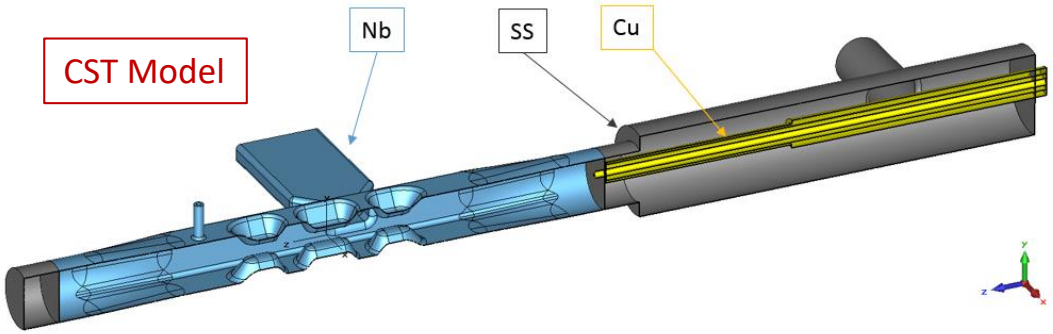

What the solver is seeing

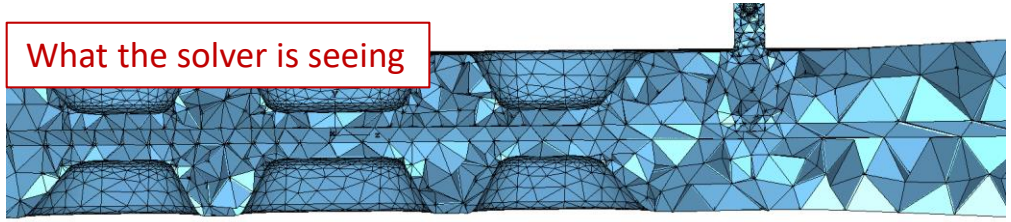

- Don't try to simulate everything from the beginning
- Start with a simple case (ideal, lossless, 1-port,..)
- Try to estimate your problem analytically & compare with numerical results
- Don't stick to a single number as the simulation result. Always look for dependencies, patterns and dynamics in your system.
- Check the mesh convergence!
- Verify results with other methods and solvers (FD <-> TD, Eigen <-> Modal, …)

- Proper/advanced meshing is critical for getting a reliable result!

Symmetrical Boundary Conditions

Setting symmetry planes & boundaries in CST

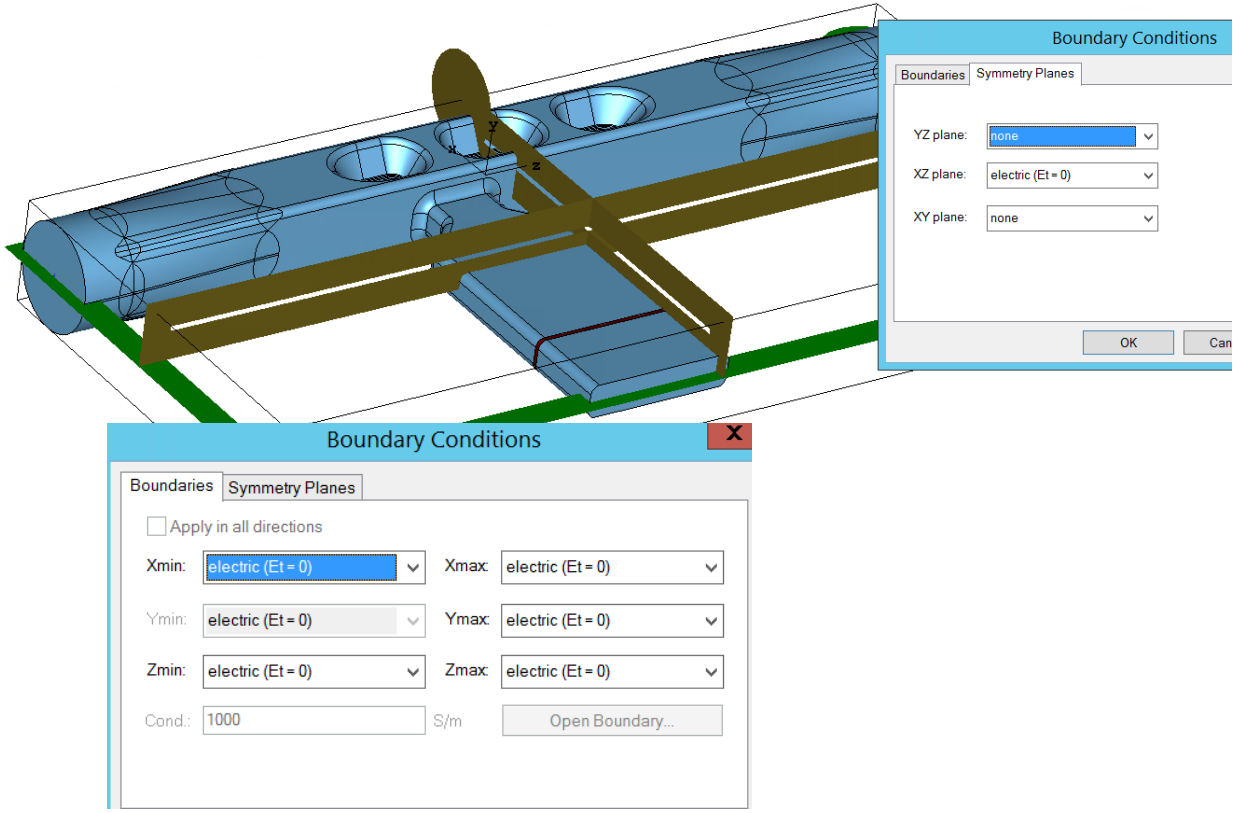

HFSS Pseudo-2D

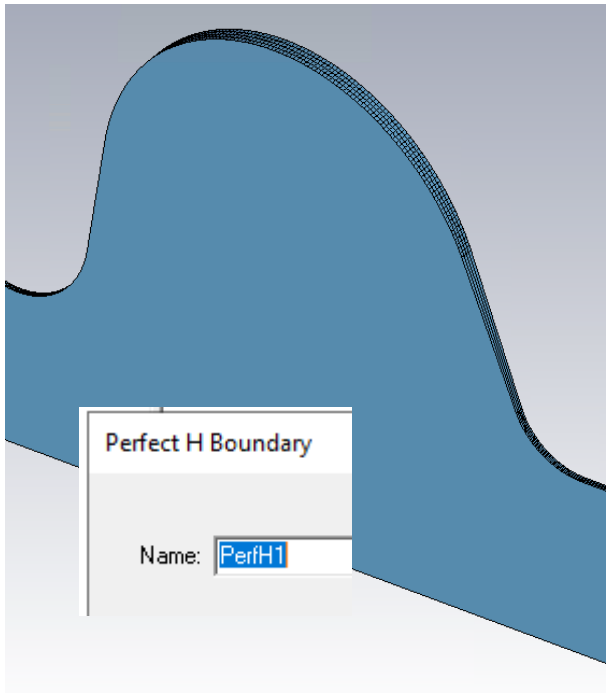

- Model symmetries save CPU memory and simulation time

Surface Meshing of QMiR Cavity

Noisy surface electric field (TET-mesh)

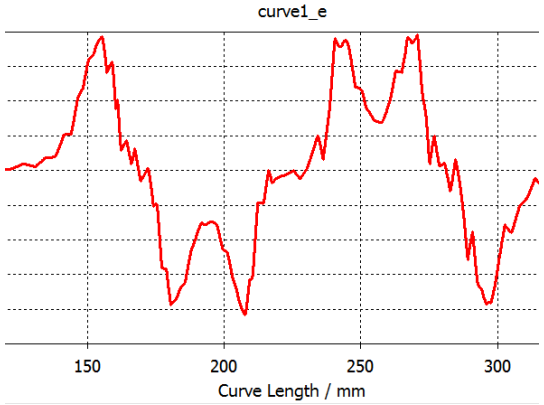

Artificial Segmented Surface Pre-meshing

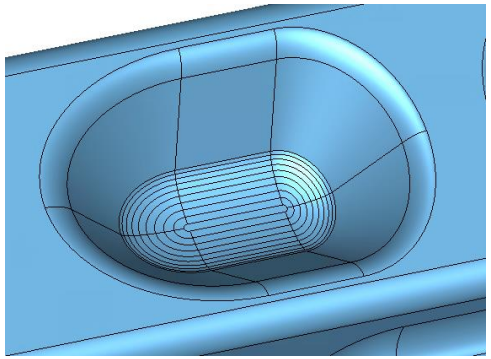

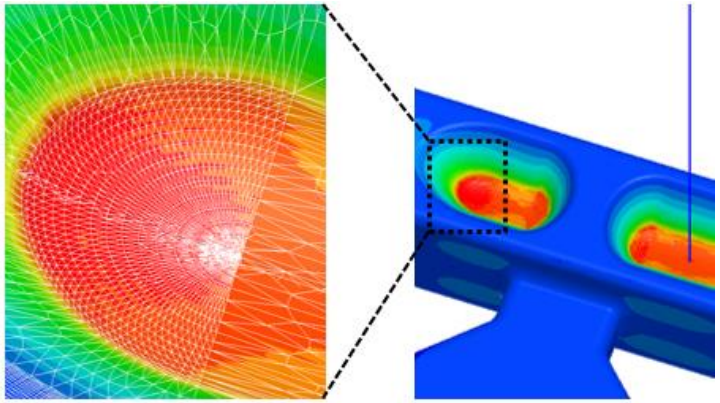

Surface Magnetic Field along the Cavity, [mT]

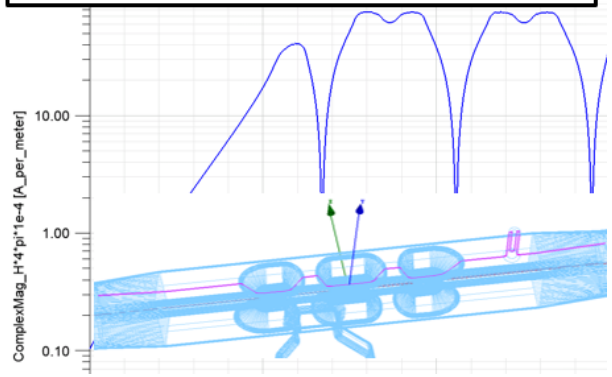

Surface Meshing of ILC 9-cell cavity

COMSOL 2D

- 500K FE mesh

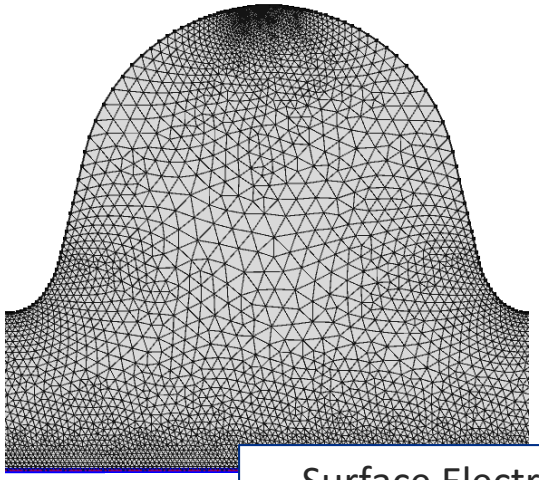

HFSS pseudo-2D

- 300K FE mesh

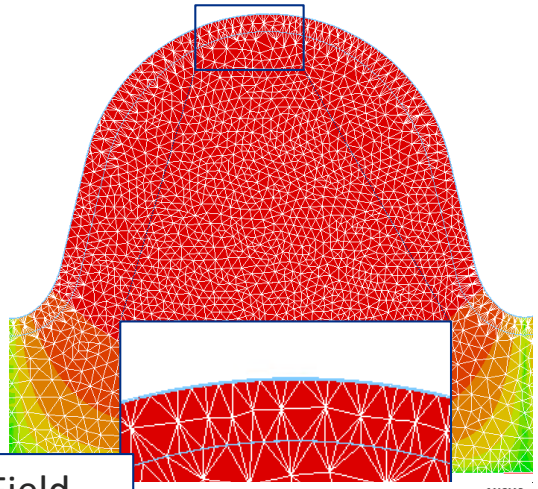

Surface Electric Field

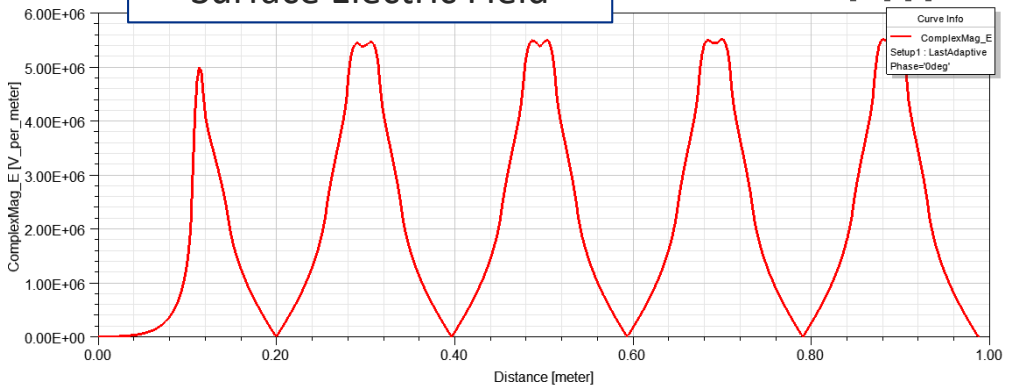

- Pre-segmented surface mesh greatly improves field accuracy
- Relative surface fields (E/H) noise < 0.1% (2D) and < 1% (3D)

ILC Cavity RF-Kick (Ex, Ey 3-orders of magnitude smaller than Eacc)

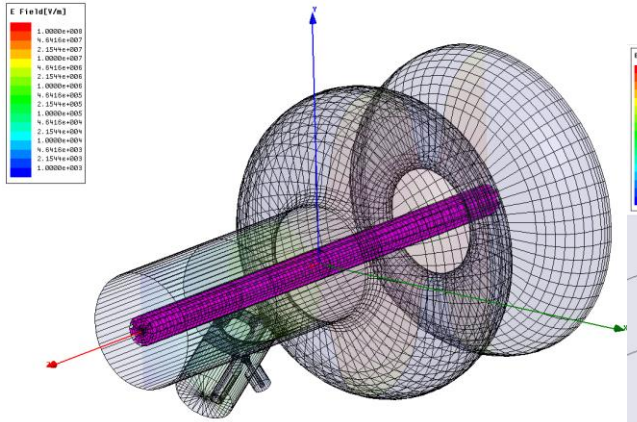

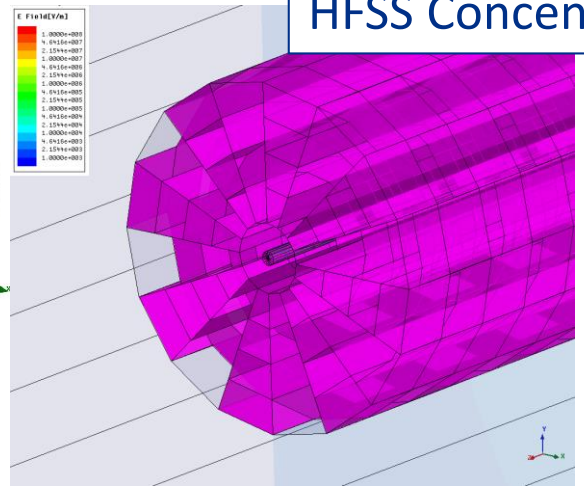

HFSS Concentric Meshing

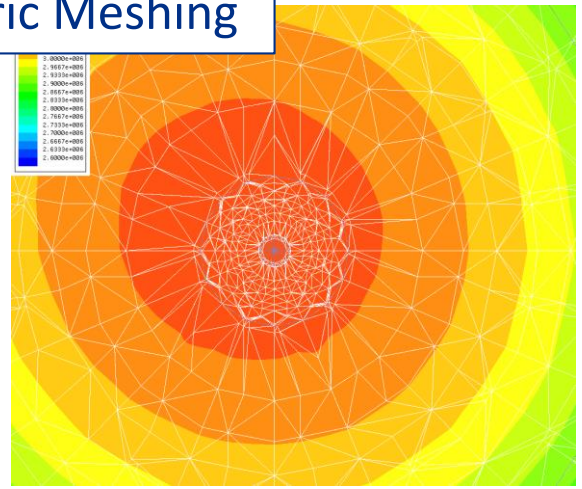

COMSOL "Cubic" Meshing

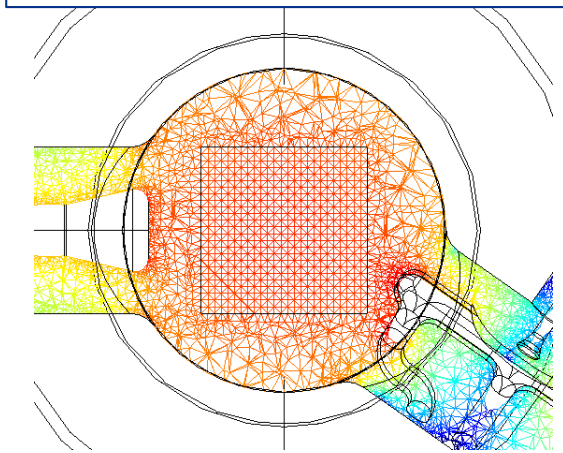

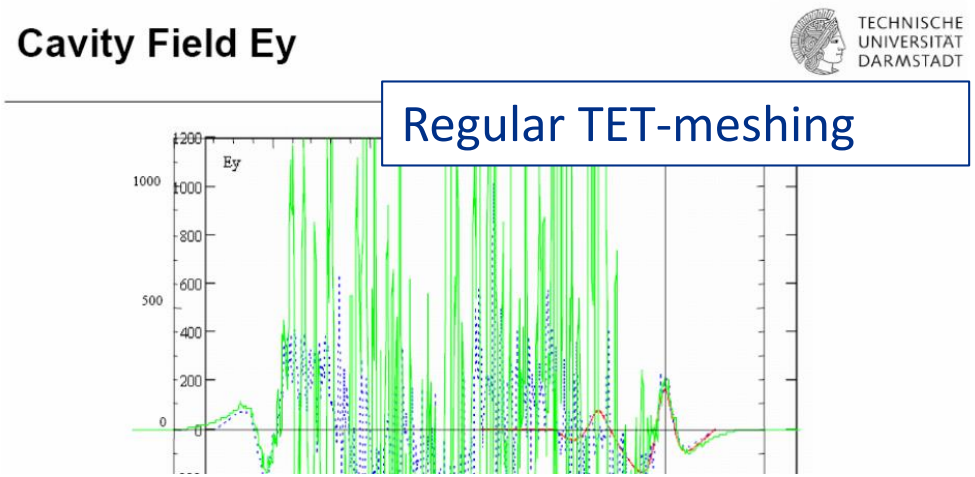

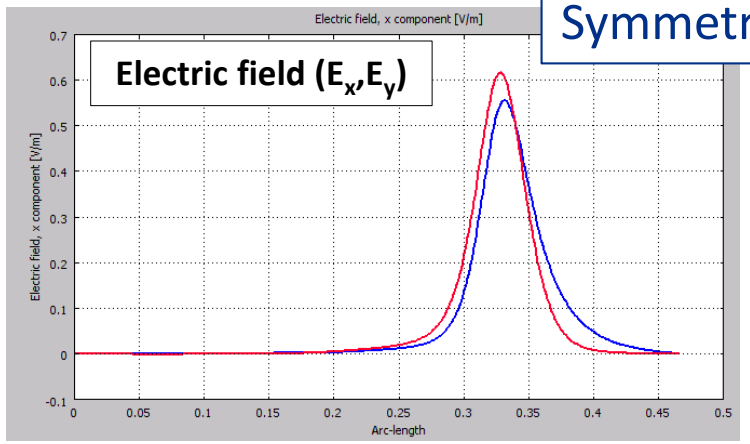

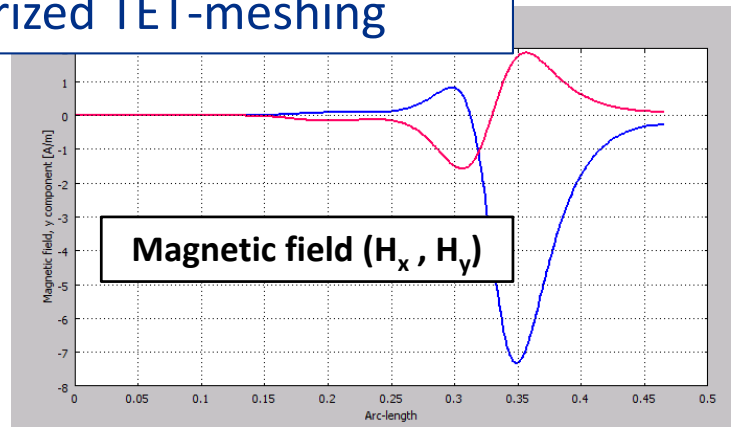

- Regularized mesh significantly reduces on-axis field noise

Statistical Analysis of the HOMs Spectrum in PIP-II 650 MHz high-β Cavity

Cavity modeling with random geometrical errors

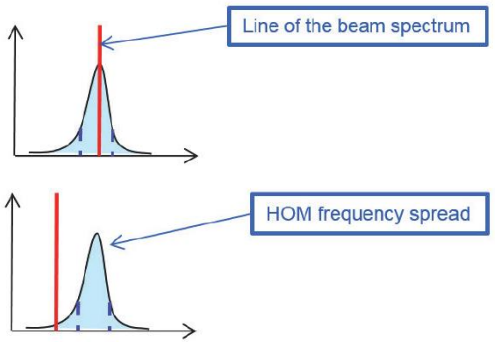

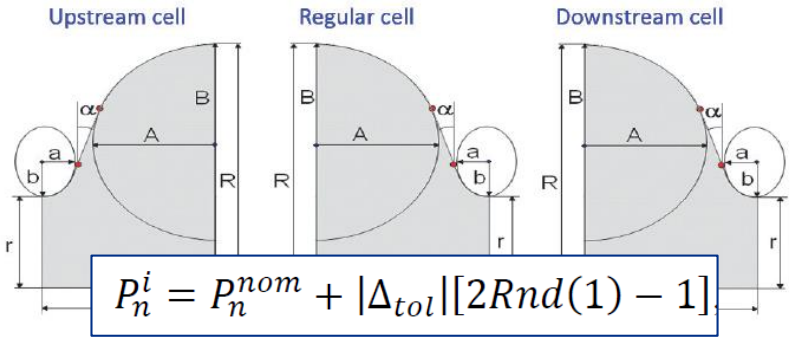

$$P_n^i = P_n^{nom} + |\Delta_{tol}|[2Rnd(1) - 1]$$

5th Monopole Passband Histograms*

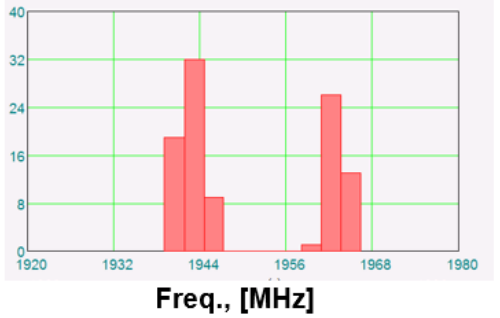

Maps of Electrical field of the 5th Monopole Passband for the ideal structure (a) and the real structure (b) (± 0.2 mm tolerance applied)

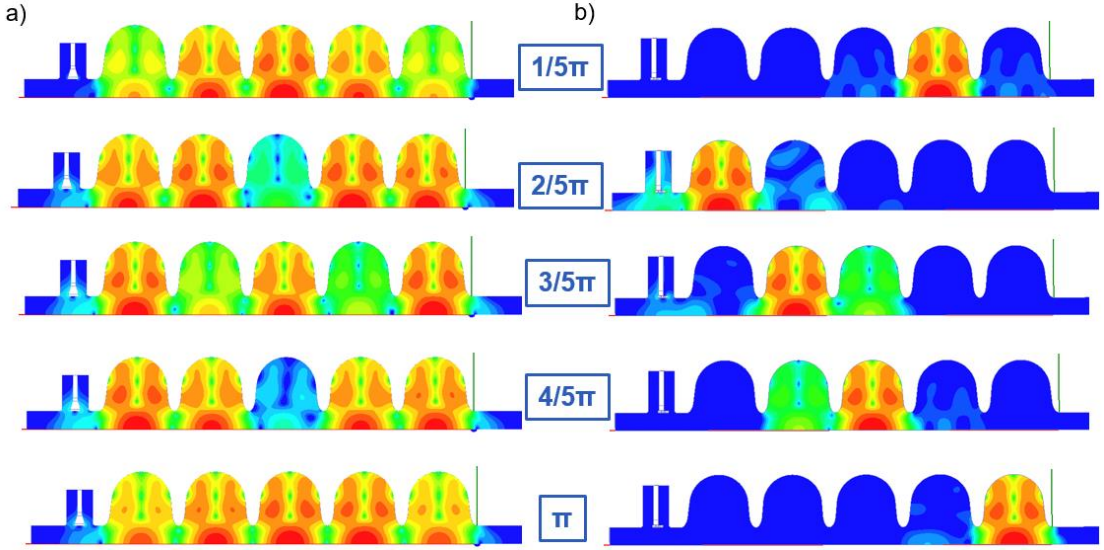

Bead pull measurement

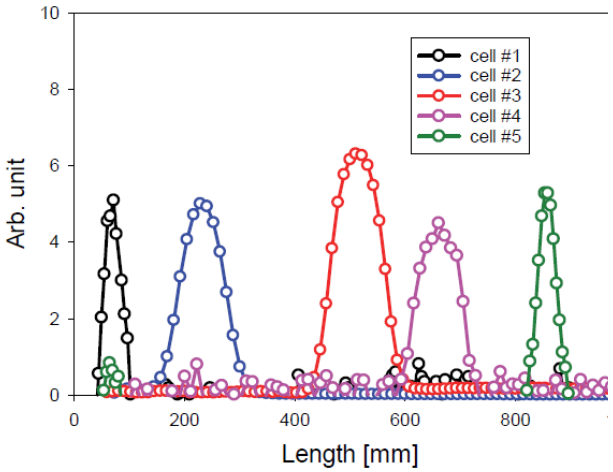

- Cavity mechanical errors may change drastically HOMs fields and parameters

Impedance Boundary in Eigenmode Analysis

Complex eigen solver

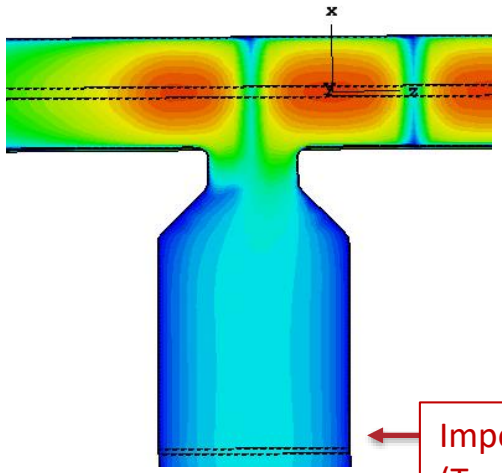

Impedance (Traveling Wave)

Direct Q-factor

characteristic impedance

$$Z_c = Z_0 \begin{cases} \dfrac{\beta_0}{\beta} = \dfrac{\lambda_g}{\lambda_0} & \text{TE mode} \\ \dfrac{\beta}{\beta_0} = \dfrac{\lambda_0}{\lambda_g} & \text{TM mode} \\ 1 & \text{TEM mode} \end{cases}$$

Lossless eigen solver

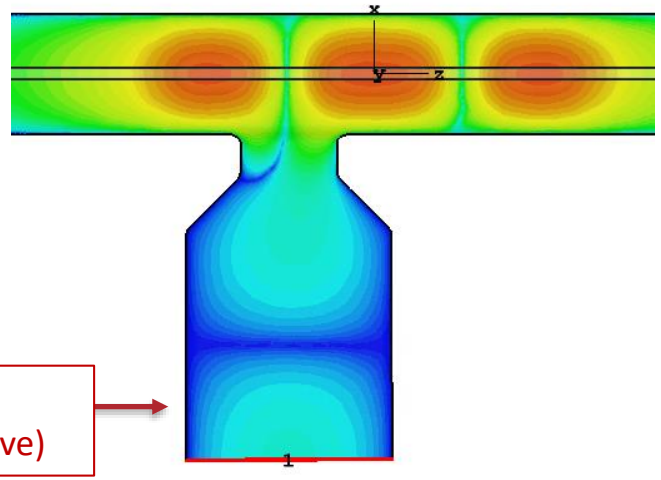

Electric plain (Standing Wave)

Perturbation Q-factor

Frequency = 2.782052 + i 1.425472e-006 GHz

Eigenmode solver results:

Mode	Frequency	Accuracy	Q (volume losses)
1 ^	2.782052 GHz	6.919189e-008	975835.4

External Q-factor computation completed.

External Q-factor results:

Mode	Loaded Frequency	External Q
1	2.815 GHz	7.072e+005

- Impedance boundary is a most accurate way to set matching conditions
- WG Port (PML) – broadband impedance but less accurate
- Plot complex amp. of E-field in logarithmic scale and check if its TW (no reflection)

Impedance Boundary in CST Studio

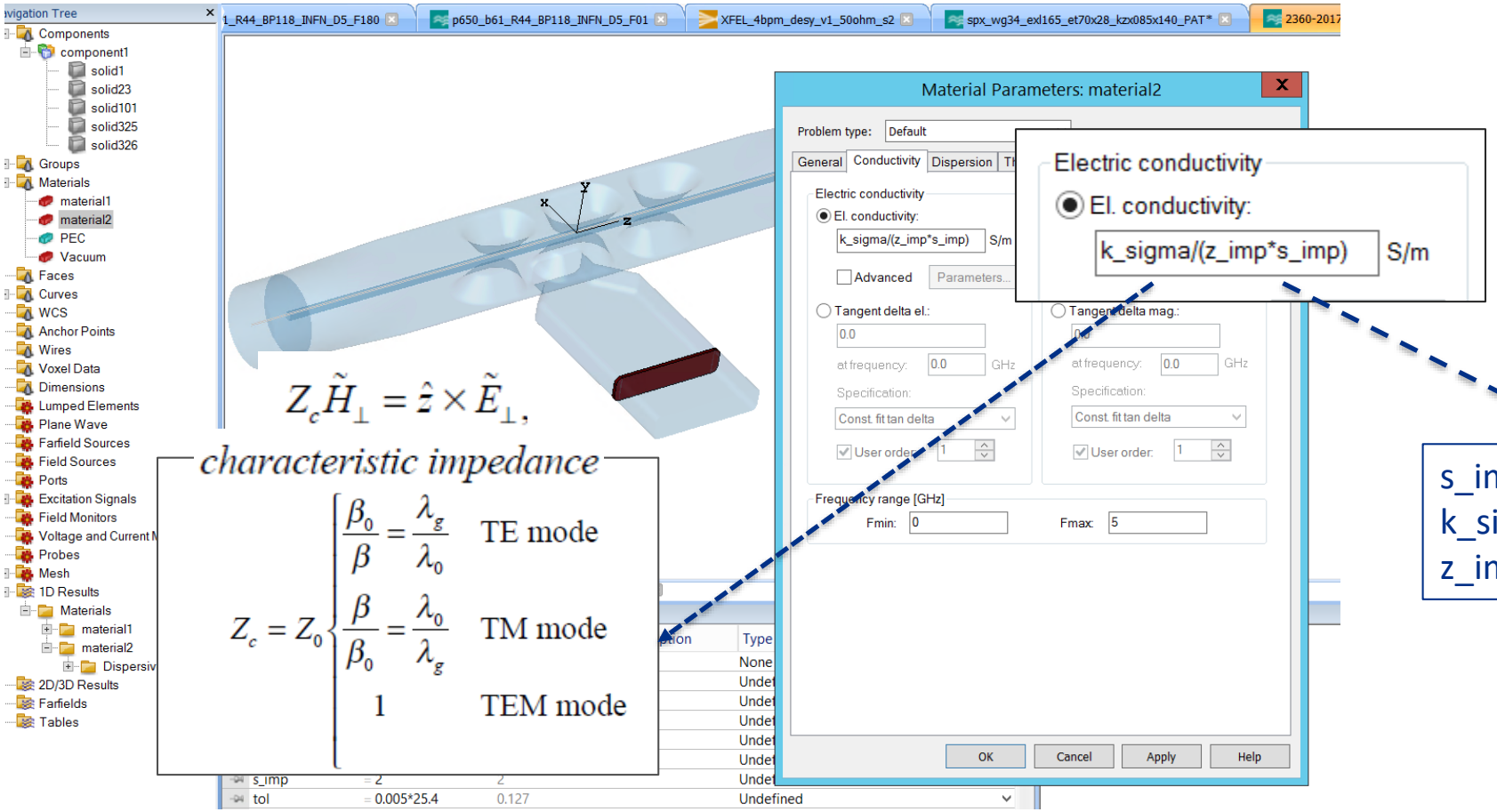

s_imp = 2 mm << λ_0 - thickness
k_sigma = 1000 - [mm] to [m]
z_imp = 665 Ω - for WG @2.8GHz

- CST has no native (pre-defined) Impedance Boundary
- Nevertheless, it is possible to create artificial IB with specific lossy element (thin insert)

Frequency Domain S-parameters Analysis

Multi-mode Port Setup

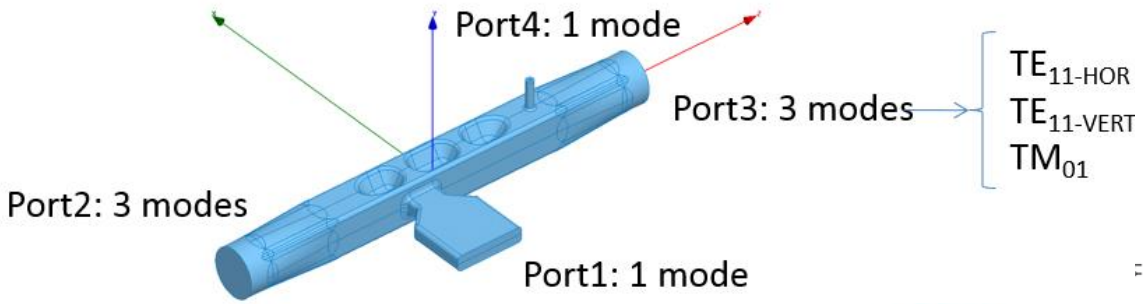

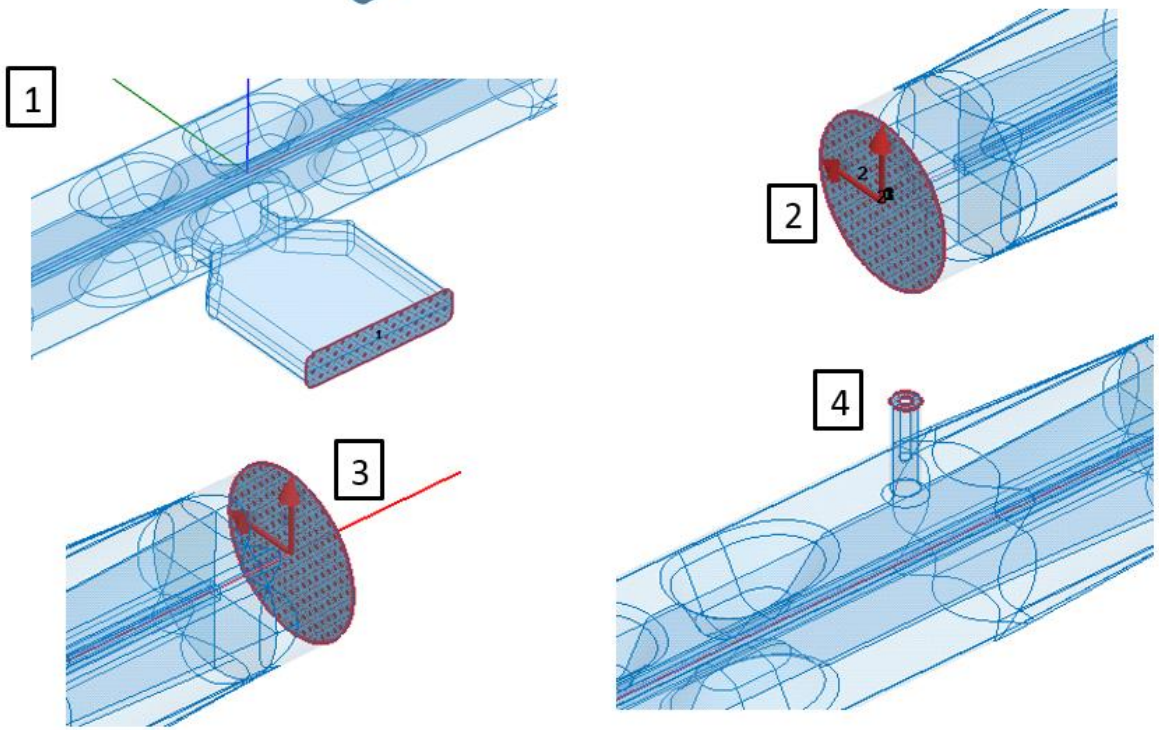

Resonant S-parameters curves

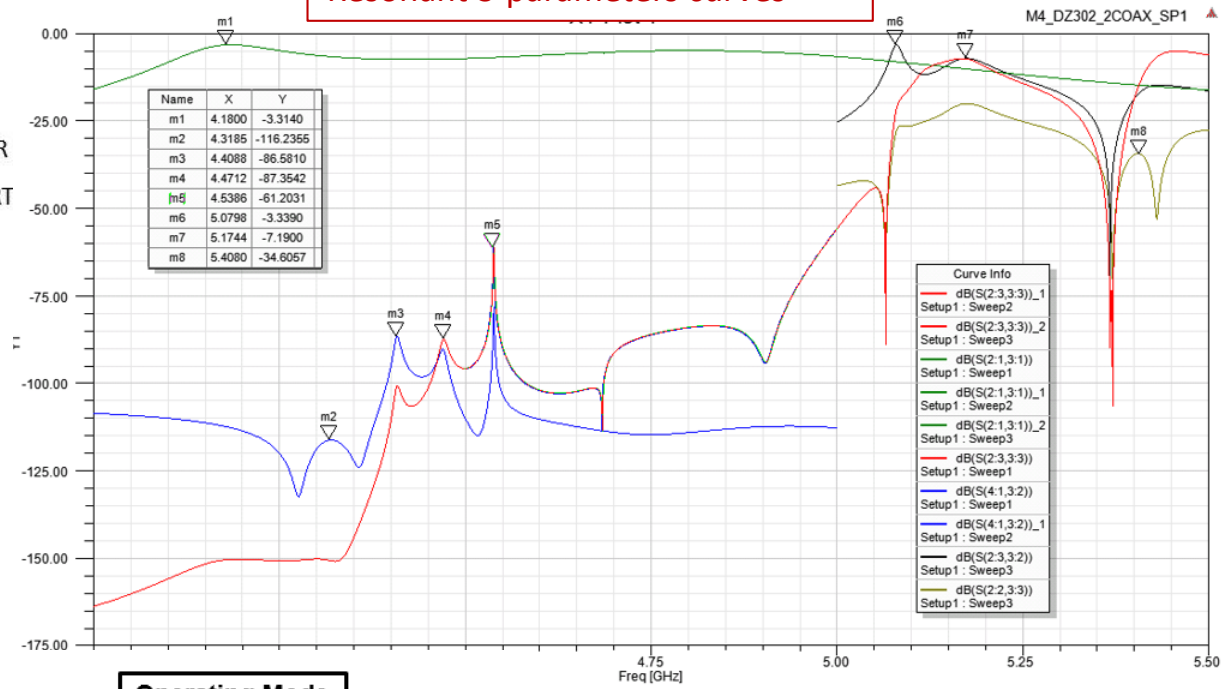

Name	X	Y
m1	4.1800	-3.3140
m2	4.3185	-116.2355
m3	4.4088	-86.5810
m4	4.4712	-87.3542
m5	4.5386	-61.2031
m6	5.0798	-3.3390
m7	5.1744	-7.1900
m8	5.4080	-34.6057

Operating Mode

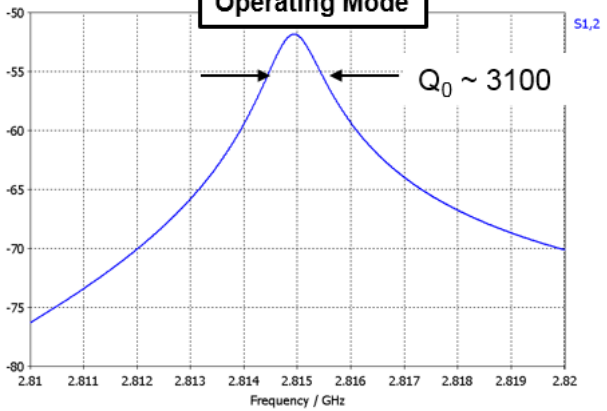

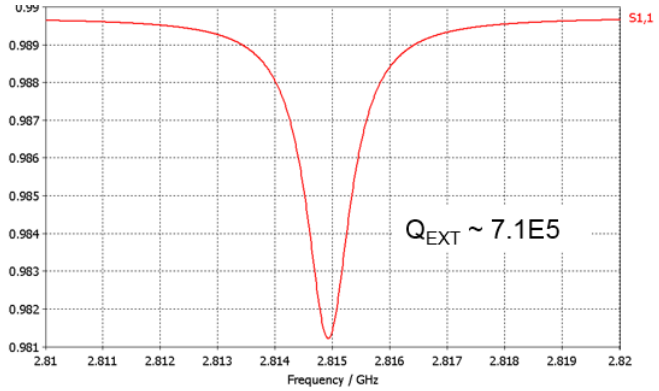

- We can crosscheck results of Eigenmode and Driven-Modal solvers

$$|S_{11}| = \sqrt{1 - 4 * \beta}\ ,\ \beta = \frac{Q_0}{Q_{EXT}}$$

Wakefields Simulation (Incoherent Losses)

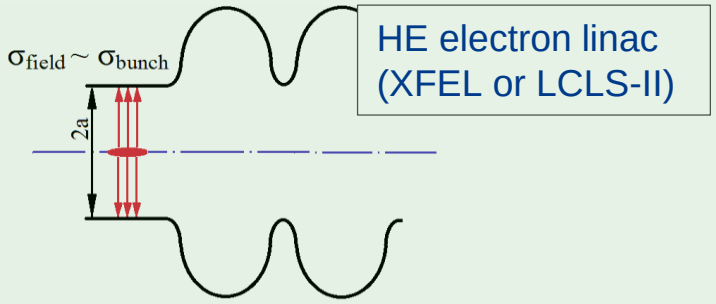

HE electron linac (XFEL or LCLS-II)

$\gamma >> 1$

- fmax ~ c/σ_{bunch}
- for σ_{bunch} = 50μ, fmax < 6 THz

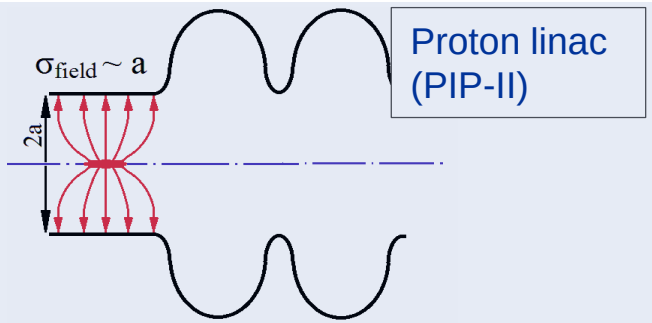

Proton linac (PIP-II)

$\gamma \sim 1$

- fmax ~ c/a
- for a = 50mm, fmax < 6 GHz

Loss factor depends strongly on the σ_{field} !

Solve in TD

- computing wakefield and wake potentials

Solve in FD

- loss factors calculation of individual cavity modes

- Incoherent beam losses can be significant in high intensity SRF accelerators.

CST Particle Studio Loss Factor Simulation

Time Domain

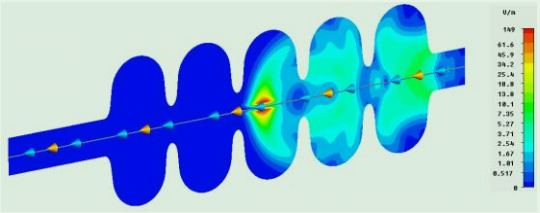

Ultra-relativistic beam (β=1)

Time Domain

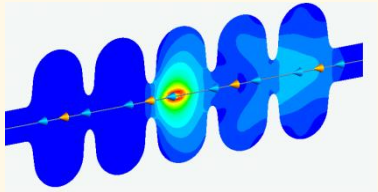

Highly-relativistic beam (β>0.9)

Frequency Domain

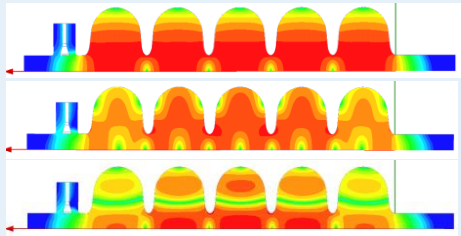

Weakly-relativistic beam (β<0.9)

Short bunches (σ_z < 1mm)

- required memory ~ $(a/\sigma_z)^3$
- computation time ~ $(a/\sigma_z)^4$
- long catch-up distance ~ $a^2/2\sigma_z$

Solution: Indirect methods

Static Coulomb forces

- $E_{static} >> W_z$
- Wrong convolution: $\int (E_s + W_z)\sigma_z dz$

Solution: Two simulations to exclude E_{static}*

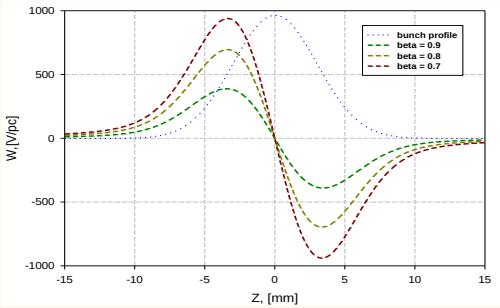

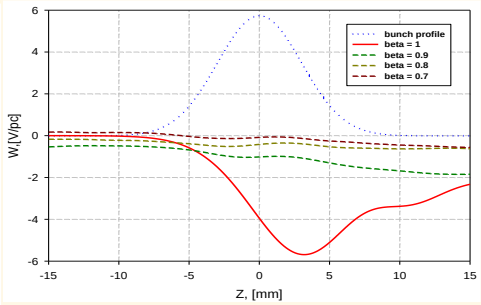

* Andrei Lunin et al., "Cavity Loss Factors for Non-Relativistic Beam in the Project X Linac," PAC2011, New York, March 28, 2011, TUP075

HOM modes

- HOM spectrum above beam pipe cut-off freq.

Solution:
Take modes with max R/Q,
Multi-cavity simulation

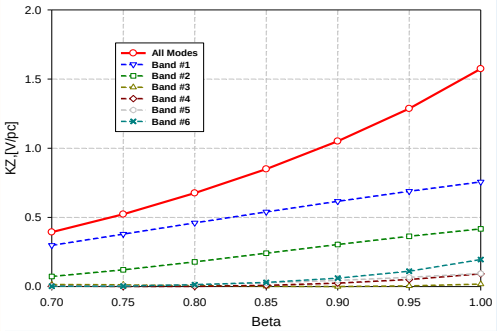

- CST PS Wakefield solver doesn't subtract static Coulomb forces for low-β beam

FD & TD HOMs Losses Analysis Comparison

Modal Loss Factors (FD)

Frequency [MHz]	$(R/Q)_x$	$(R/Q)_y$	$(R/Q)_z$	Modal K_{loss} [V/pC]	Q_{ext}	Q_{WG}	Q_{P1}	Q_{P2}
2476	0.001	0.034	-	-	2400	2400	-	-
2675	1.7e-4	4.95	-	-	6800	6800	-	-
2815	1e-5	521	-	-	5.1E5	5.1E5	-	-
4170	1.4e-4	7.3	-	-	32	160	125	74
4303	-	-	0.64	3.7E-3	55	-	160	85
4408	-	-	19.5	0.12	530	-	2500	680
4471	-	-	18.7	0.11	400	-	960	680
4538	-	-	0.17	1E-3	4900	-	14300	7750
5080*	-	-	60 - 80	0.3 -0.4	390	-	490	1900
5115*	-	-	10 - 20	0.05 – 0.1	100	-	4500	110
5165*	-	-	2 - 8	0.01 - 0.04	65	-	90	270
5410*	-	-	2 - 6	0.01 – 0.03	80	-	160	160
				$\sum K_m$ = 0.62 - 0.81				

* R/Q is roughly estimated because the TM_{01} mode is above cut off and have fields in a beam pipe

$$R/Q = \frac{U^2}{2\omega W}$$

Modal loss factor: $$(K_{loss})_m = \frac{1}{2}(R/Q)_m * \omega_m * (A_{damp})_m$$

Damping factor: $$(A_{damp})_m = e^{-k_m^2\sigma^2}, \quad k_m = \omega_m / c$$

Total Loss Factor (TD)

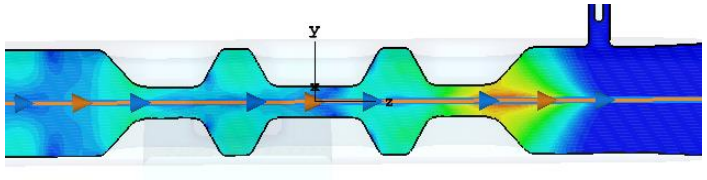

Sigma	10 mm
Max. beam frequency (-20 dB)	10.2391 GHz
Beta	1
Charge	1e-09 C

User File: Wake integration infos

```
Wake Integration type : Direct
Simulated wake length : 100 mm
Wake shift x          : 0 mm
Wake shift y          : 0 mm
Wake-Loss-Factor      : 8.516674e-001 V/pC
```

- It is useful to crosscheck FD (Eigen-solver) and TD (Wakefield solver) results

Frequency Scattering Matrix Analysis

3.9 GHz 9-cell Structure Decomposition

S-matrix (Upstream End Group) + 9 x S-matrix (Middle Cell) + S-matrix (Downstream End Group)

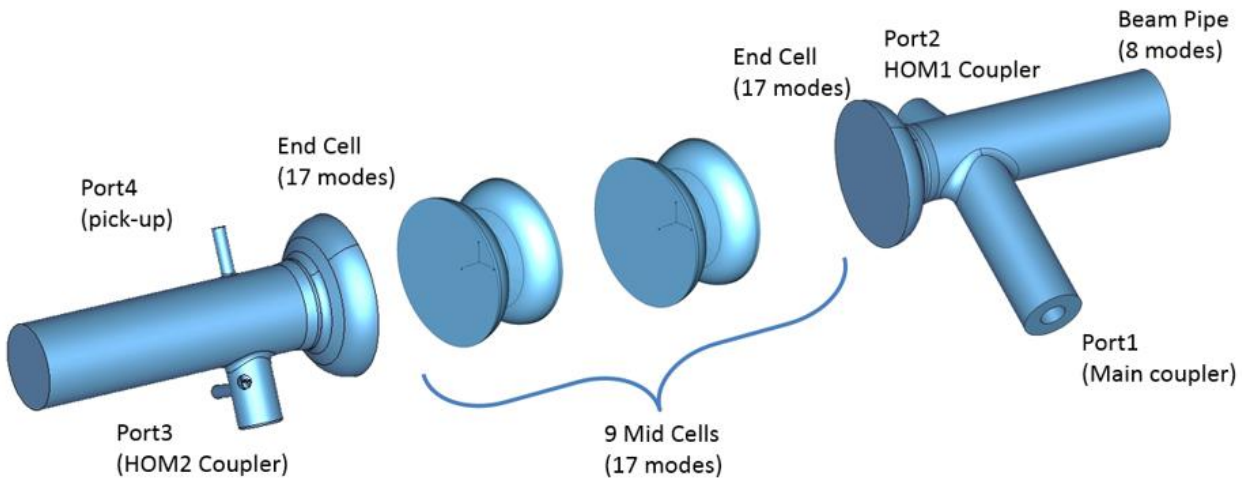

Full Structure S-matrix

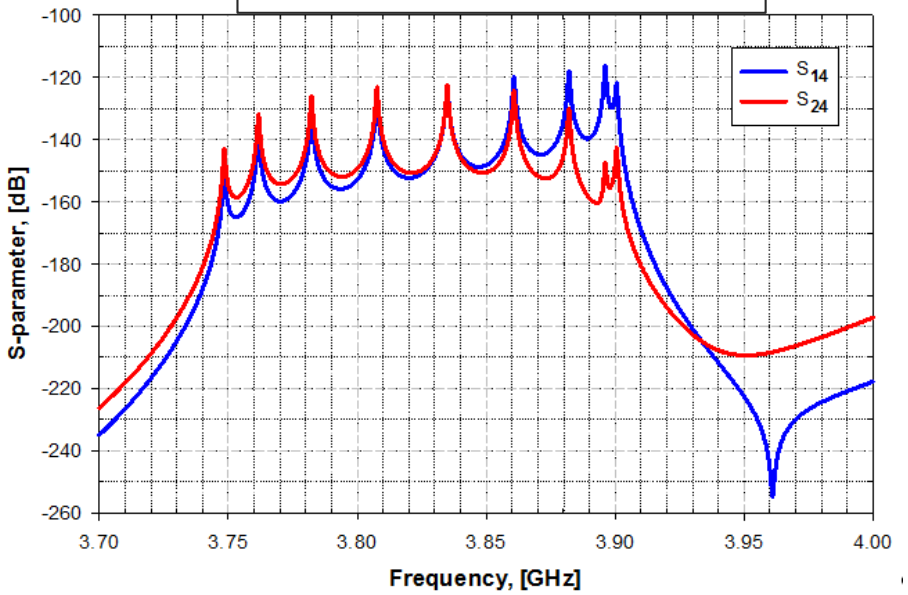

- The components must be non-resonant

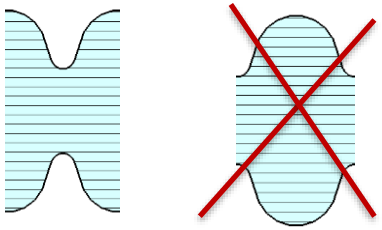

- Leave a regular waveguide section!

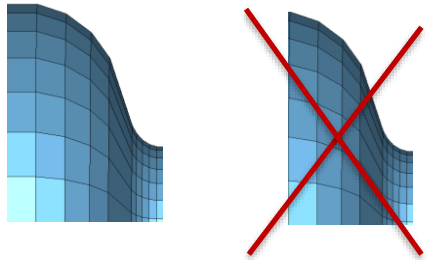

- Use proper mode alignment!

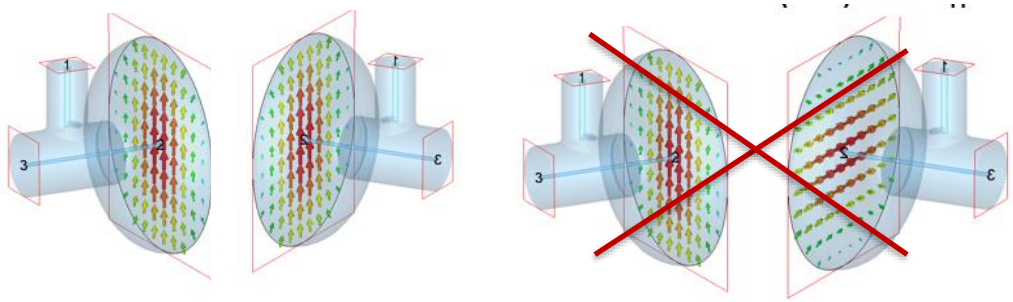

- Reduced calculation time
- Precise frequency resolution

- Easy phase manipulation
- Modeling of chain of coupled cavities

Frequency Scattering Matrix Analysis

CST Design Studio

Up, Mid and Down Blocks

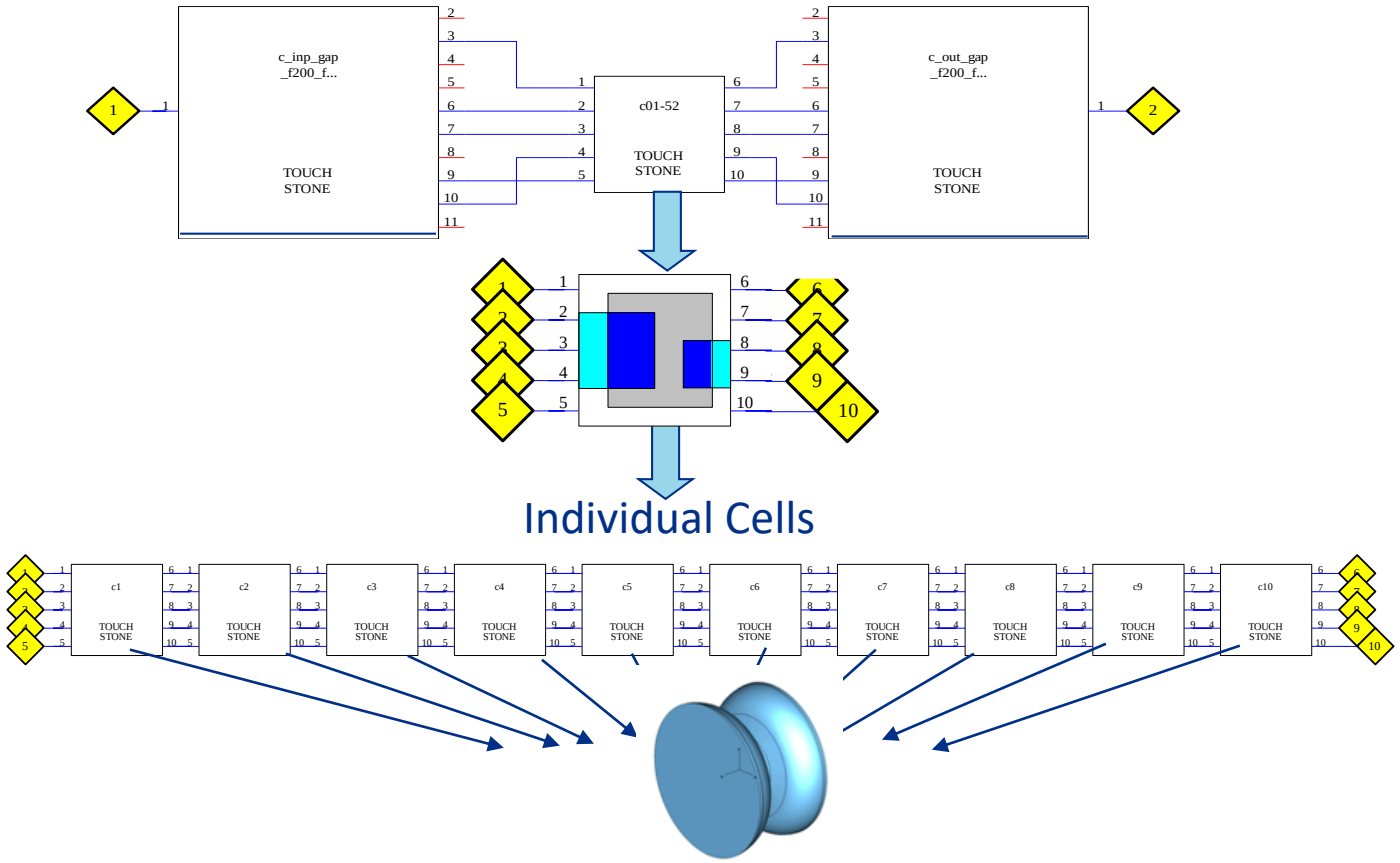

HFSS Circuit Design

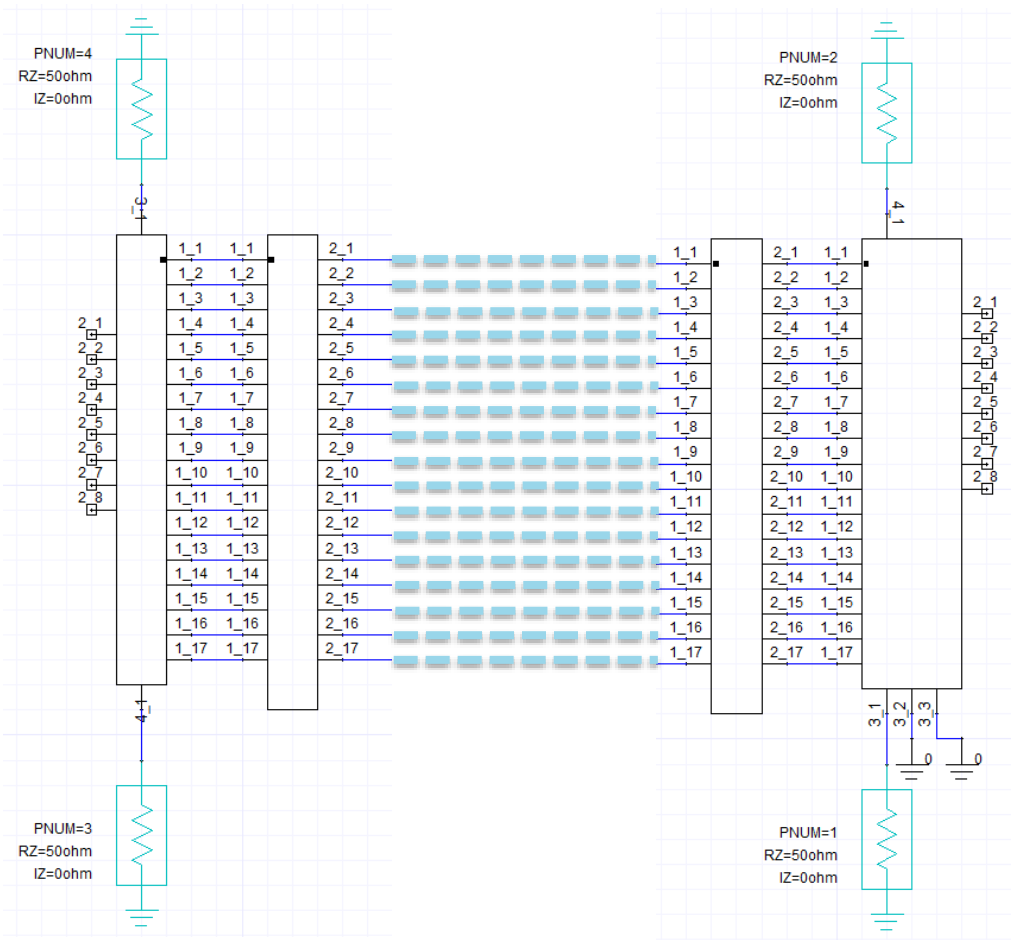

- Proper port terminations are essential
- All input impedances must be the same as in the calculated S-matrix

- Modern numerical simulation software is a powerful tool for multiphysics engineering analysis suitable for the design of various accelerator components.
- CST GUI makes an easy creation of complicated geometries and artificial meshing, thanks to a visual debugging feature
- CST Particle Studio provides unique interfaces for simulating charged particles beam dynamic (but need to fix loss factor for low-β beams)
- Symmetrical meshing greatly increases an accuracy of calculated field components (not yet available)
- Use TD/FD/DrivenModal solvers to crosscheck simulation results
- Impedance boundary is a natural way to set matching conditions in eigenmode analysis.
- Frequency scattering matrix analysis is a reliable method for modeling a chain of coupled cavities

THANK YOU!