# SingleModule PLC control

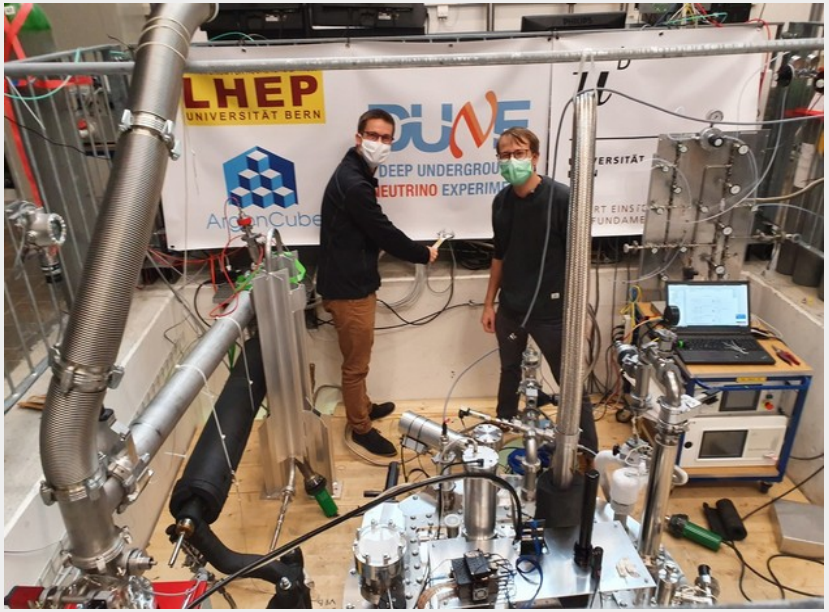


*I. Kreslo, Uni-Bern, 4 Mar 2021*

# PLC interface : Pressure/Flow sensors

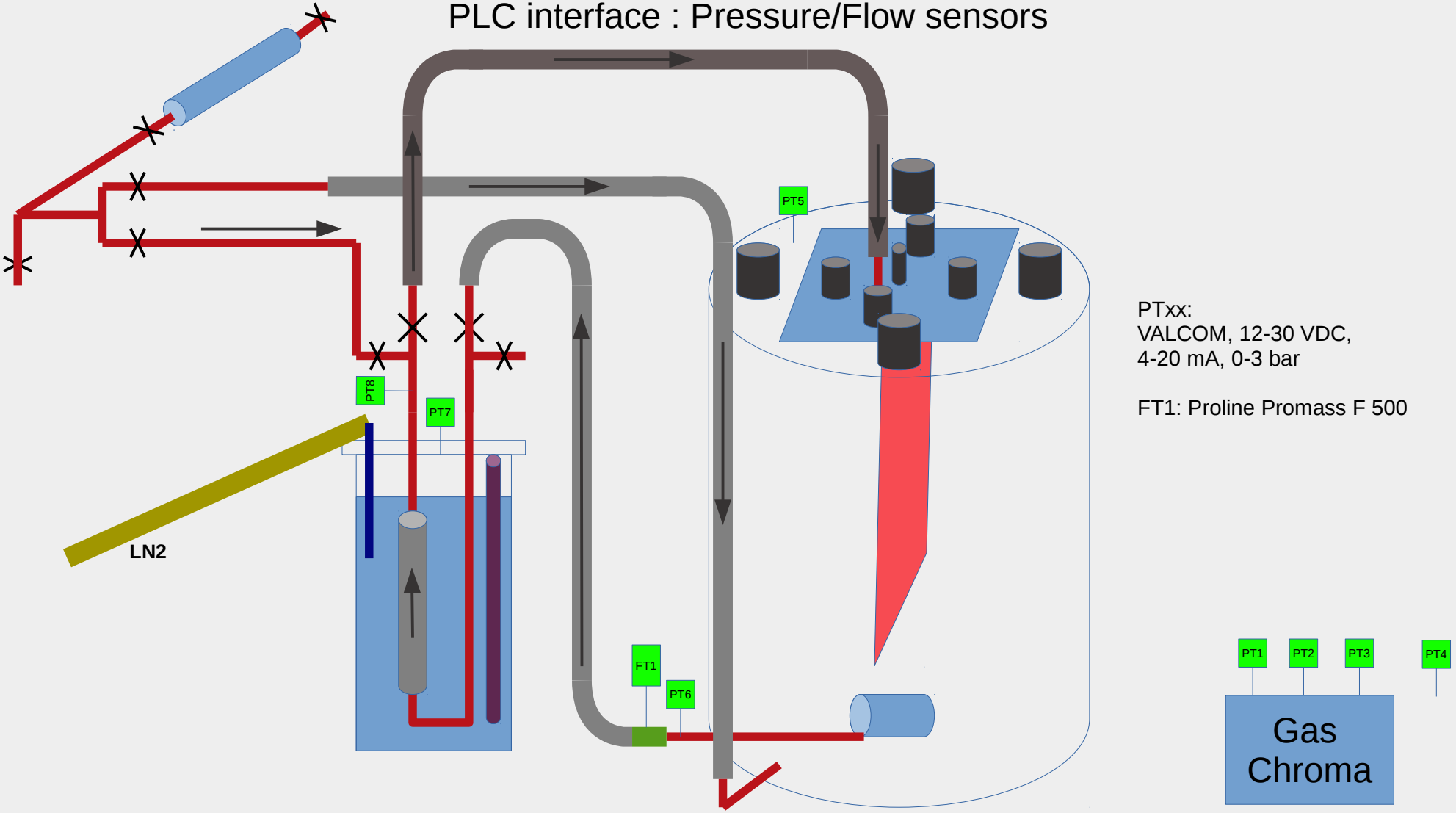

# P&ID : Temperature/Level sensors

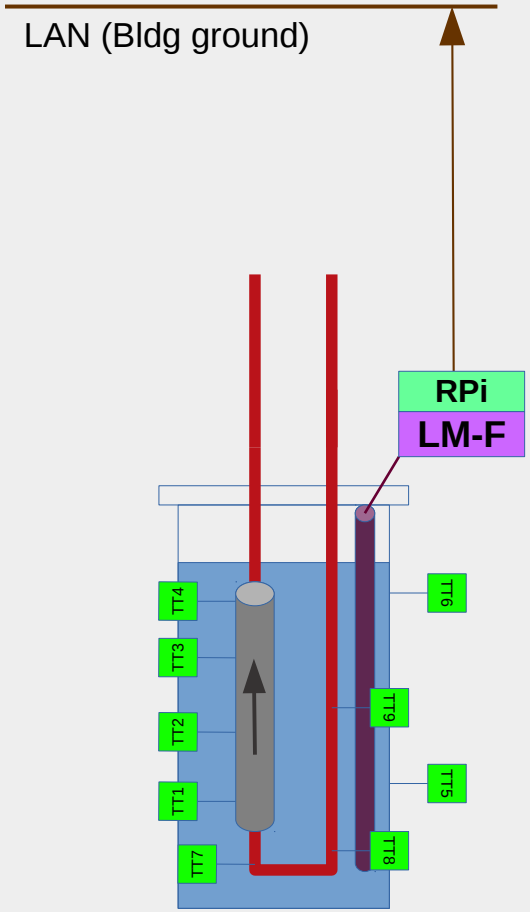


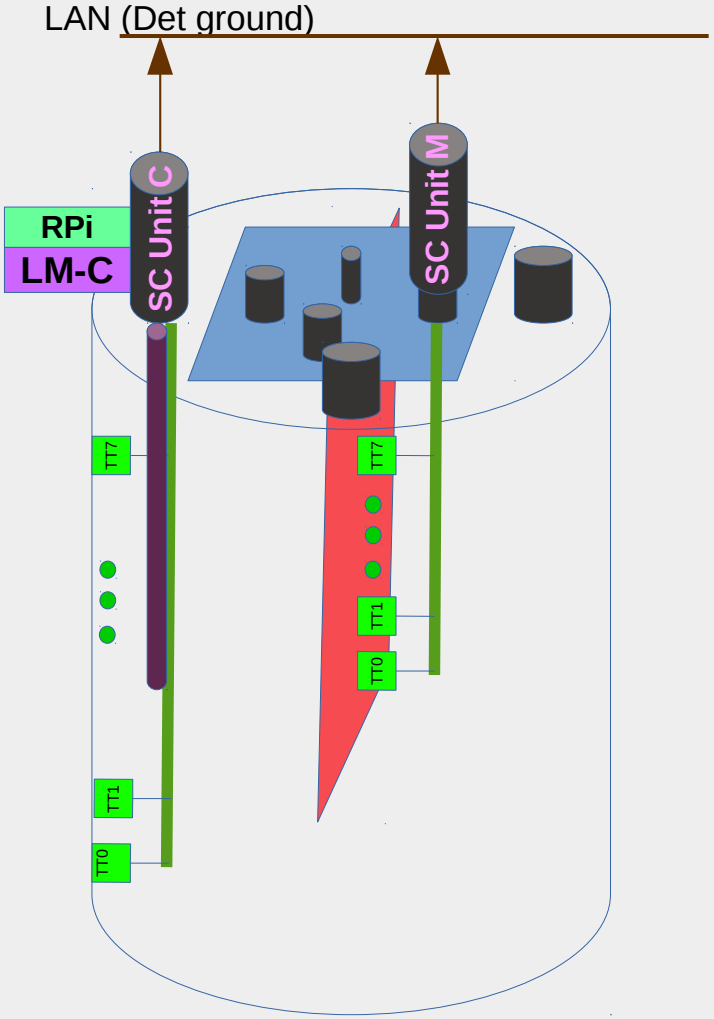

# PLC interface : Temperature/Pressure control

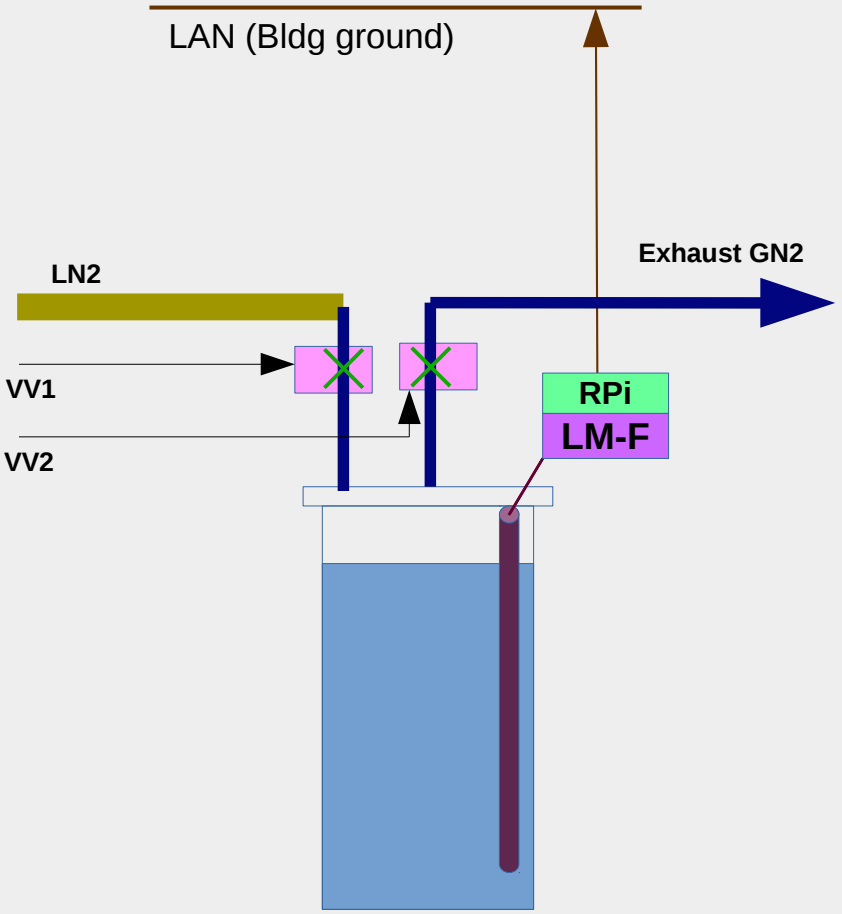


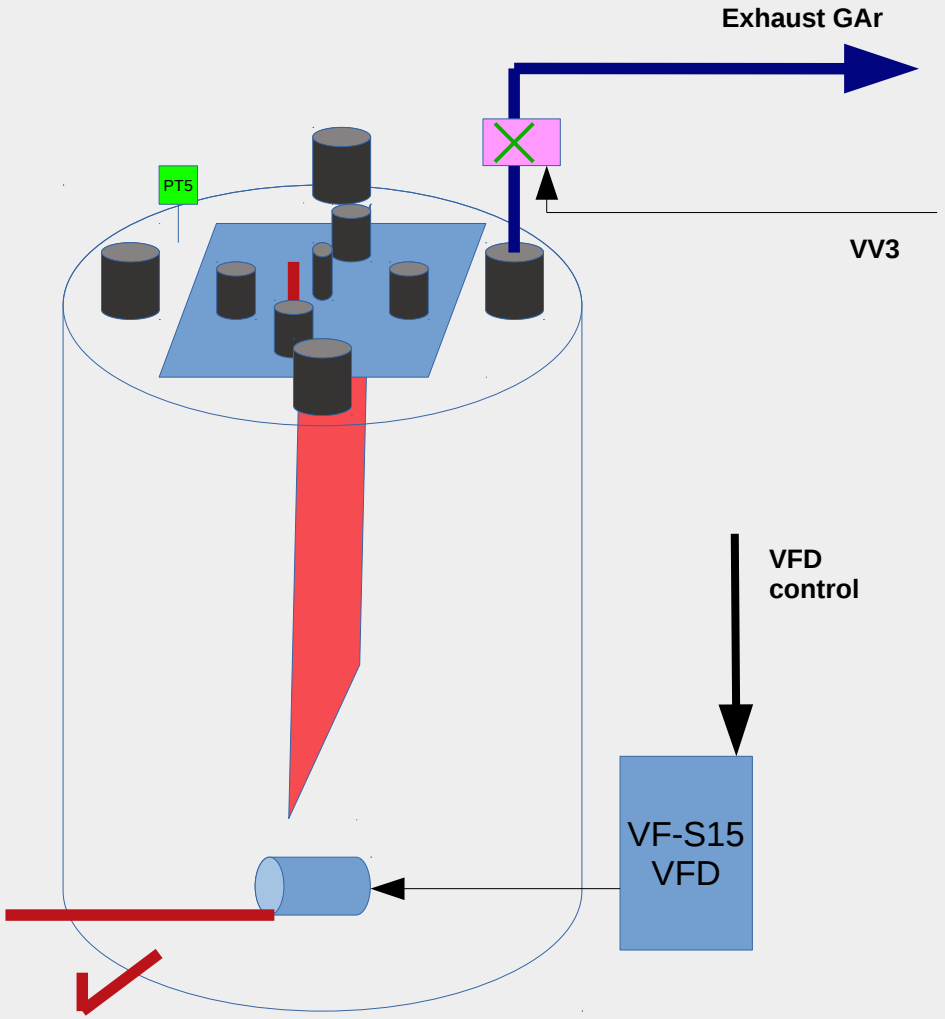

# PLC functional scheme: LN2 level control

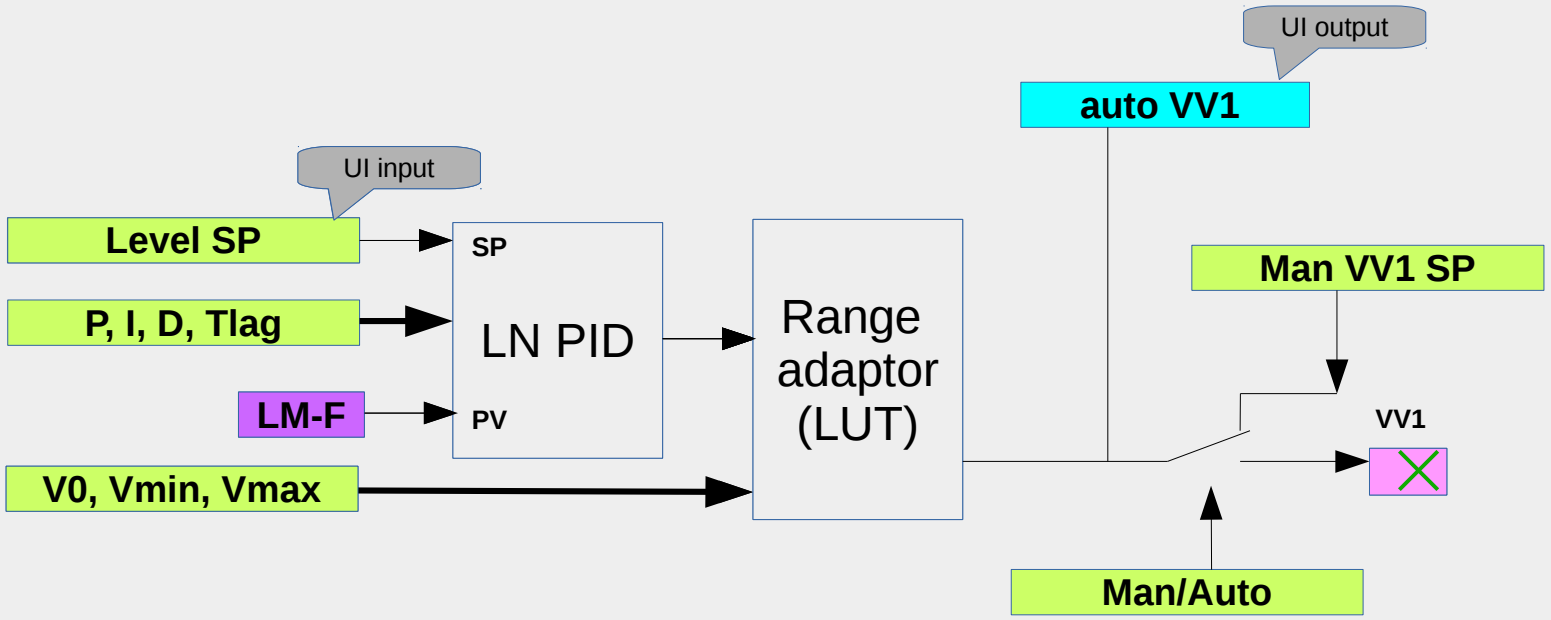


External data provider - LM-F level meter via Serial RS232

# PLC functional scheme: GN2 pressure control (part 1)

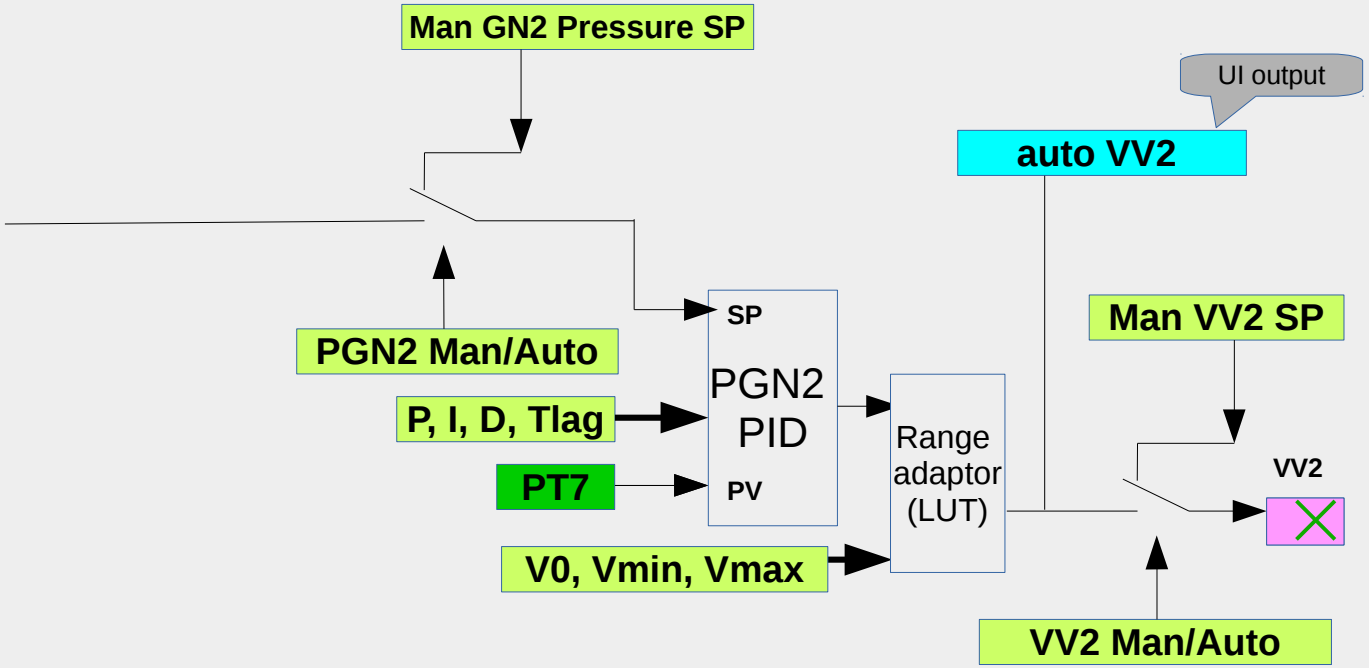

# PLC functional scheme: GN2 pressure control (part 1)

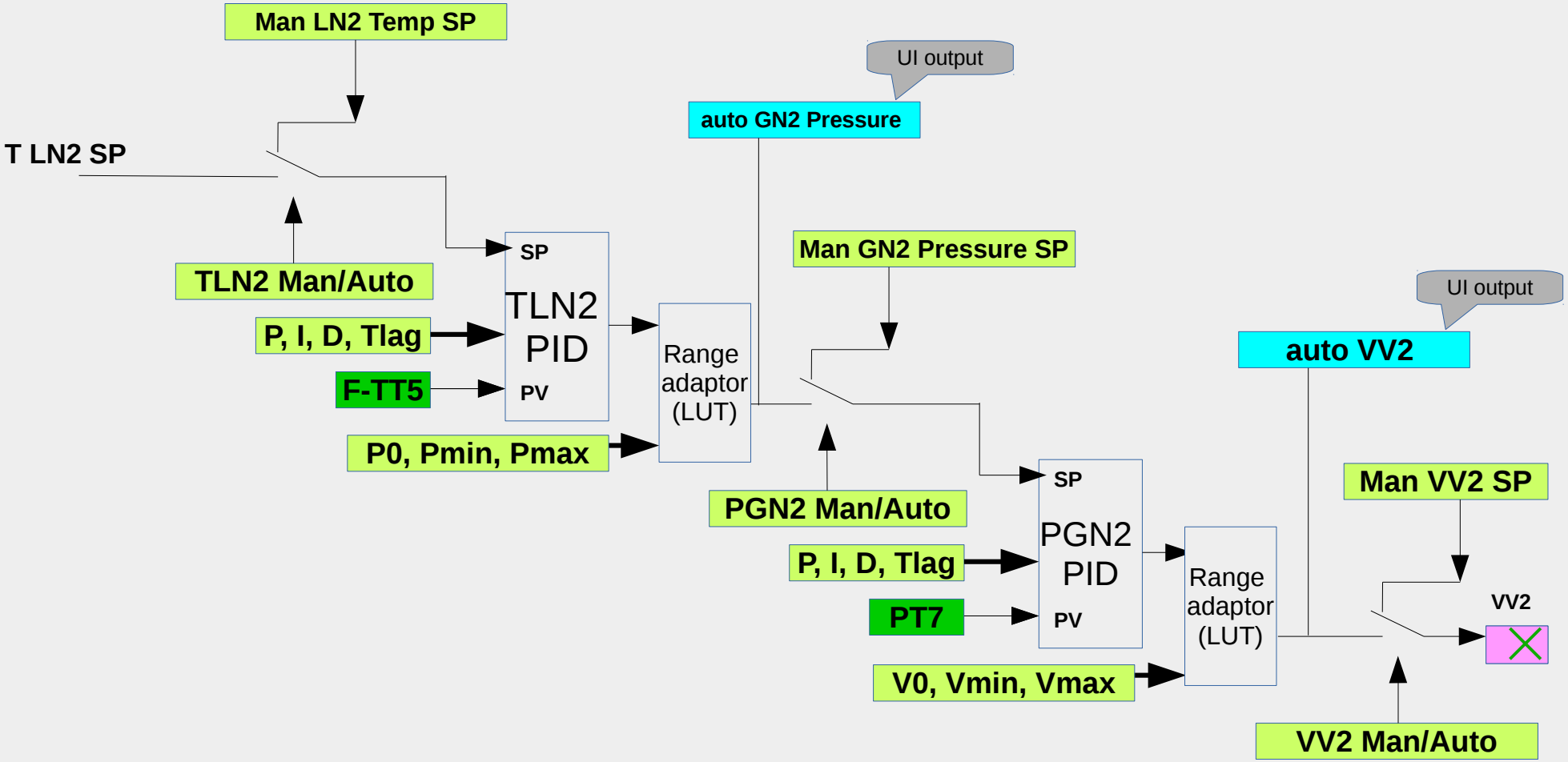

# PLC functional scheme: GN2 pressure control (part 2)

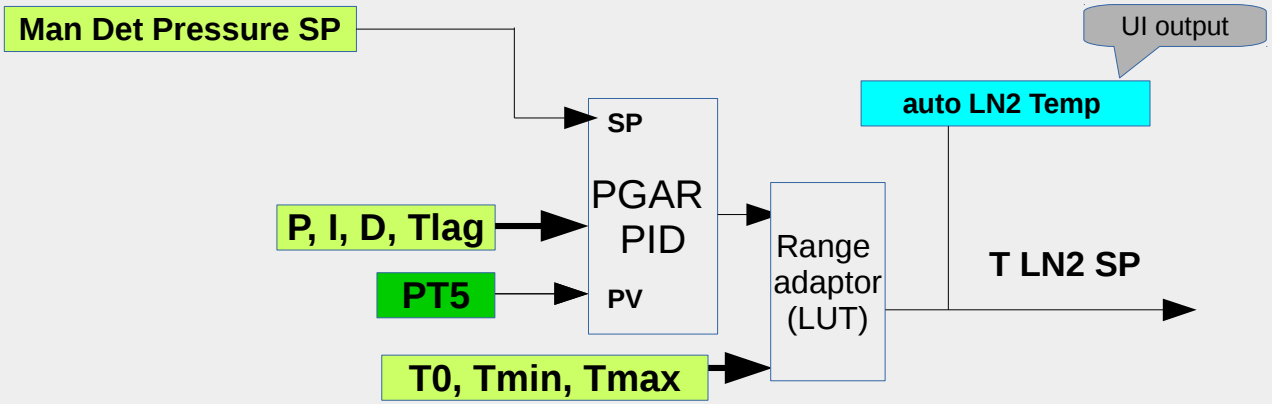


## Range adaptor:

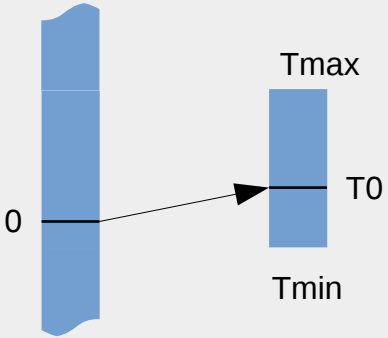

# PLC functional scheme: Detector ullage pressure control

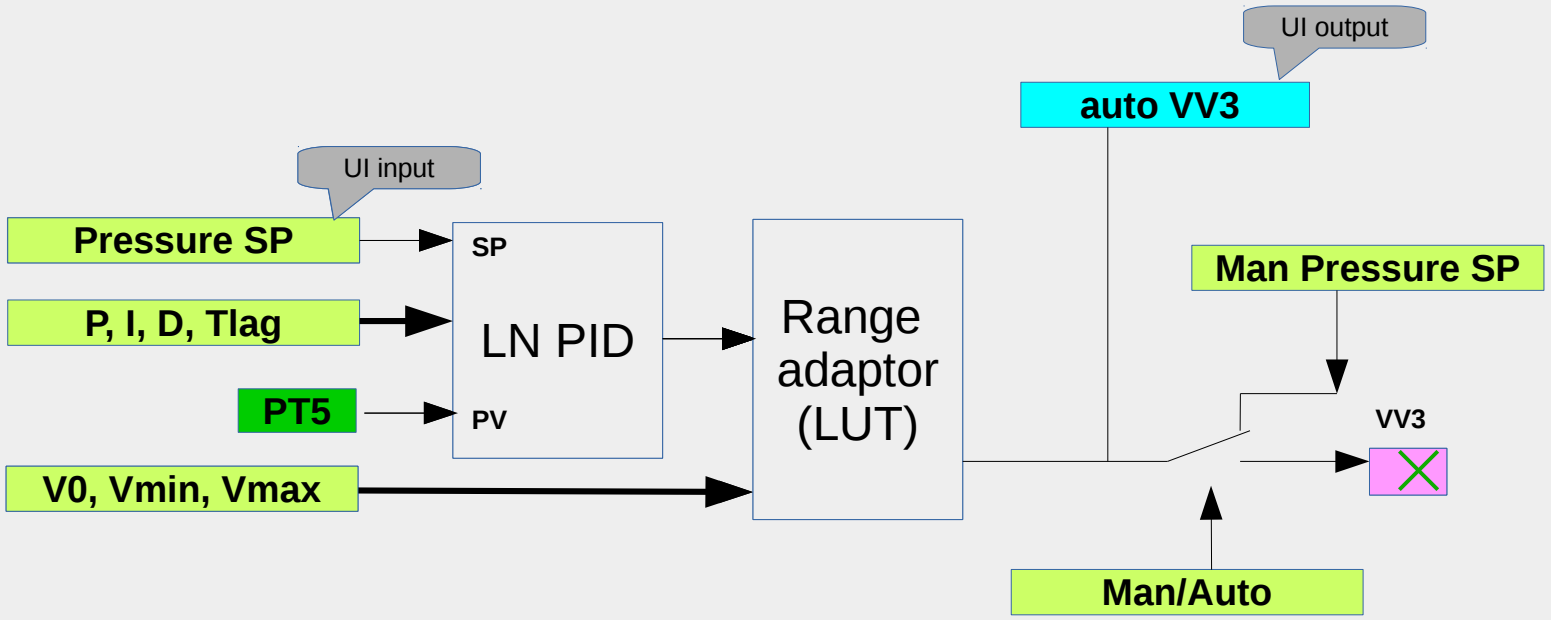

# PLC functional scheme: Sensor calibration module

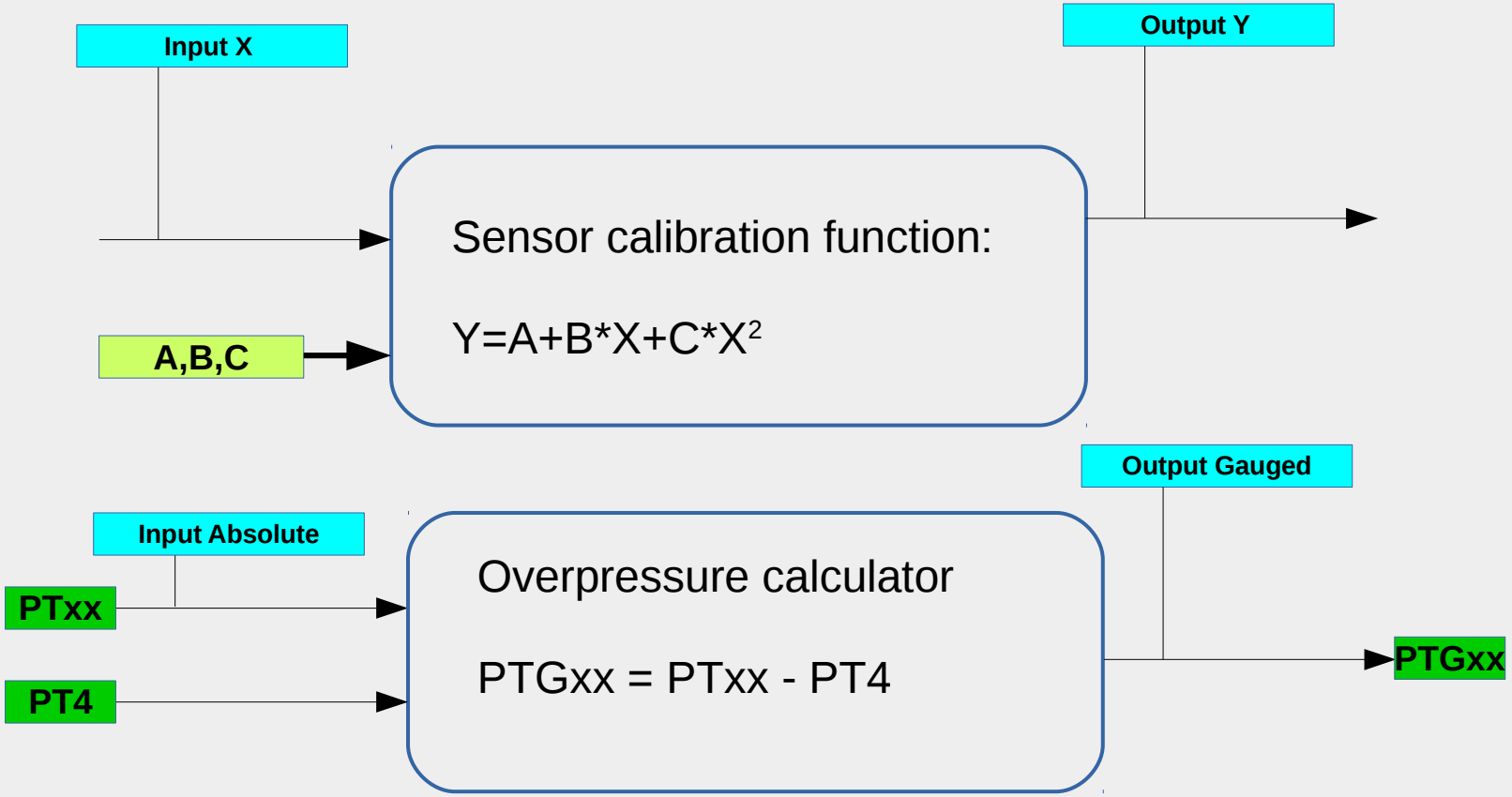

Safety :

“Red Button” pressed -> system to safe state

- VV1 closed
- VV2 open
- VV3 open
- Pump motor disabled, controller power off
- HV interlock OFF
- Blinking Red/green lights on light tower

“Reset from Safe state”

- VV1, VV2, VV3 to their normal state (regulated or manual, as was before the event)
- Light tower to normal state indication
- Pump remains OFF
- HV remains OFF

# Fermilab PLC

CX9020 CPU

67 IO terminals

Toshiba VFD

Line reactors

Power supply with UPS

HMI with touch screen

2 Oxygen sensors for ODH

TwinCAT2 on Win PC

# PLC UI windows

1. Filter control: (VV1 & VV2 PIDs, Det. pressure(PT5) , Levelmeter)
2. Detector control: (VFD control, PT5, PT6, PT8, exhaust VV3 valve PID, Levelmeter)
3. Gas Chromatograph: (PT1-PT4, PT5)
4. Sensors overview and calibration page (2$^{nd}$ order curve)
5. Alarms page (for remote operation)

Realized as **TwinCAT Visualization screens**

and

**HMI pages**

# PLC UI windows: Detector overview

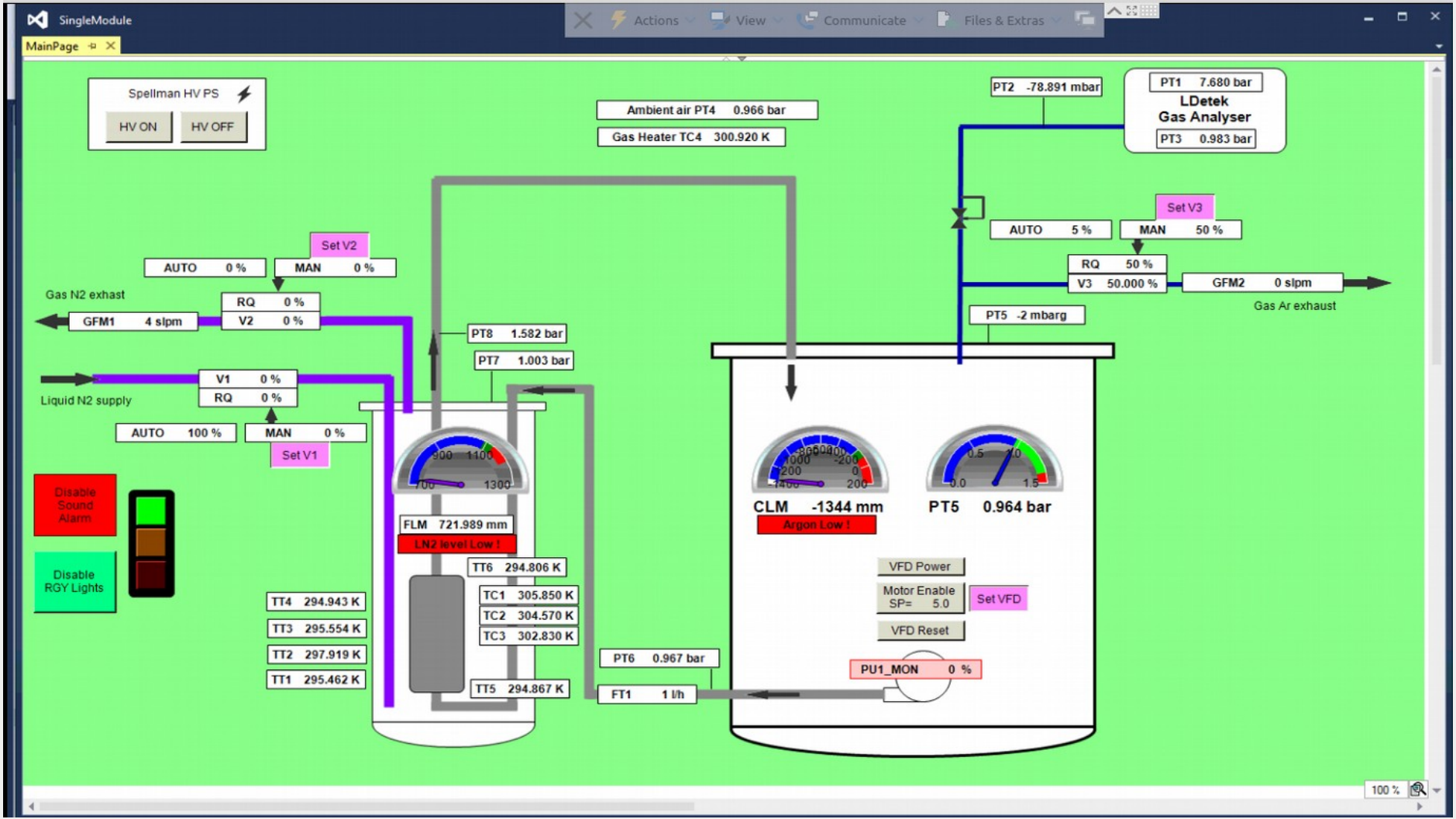

# PLC UI windows: PID page

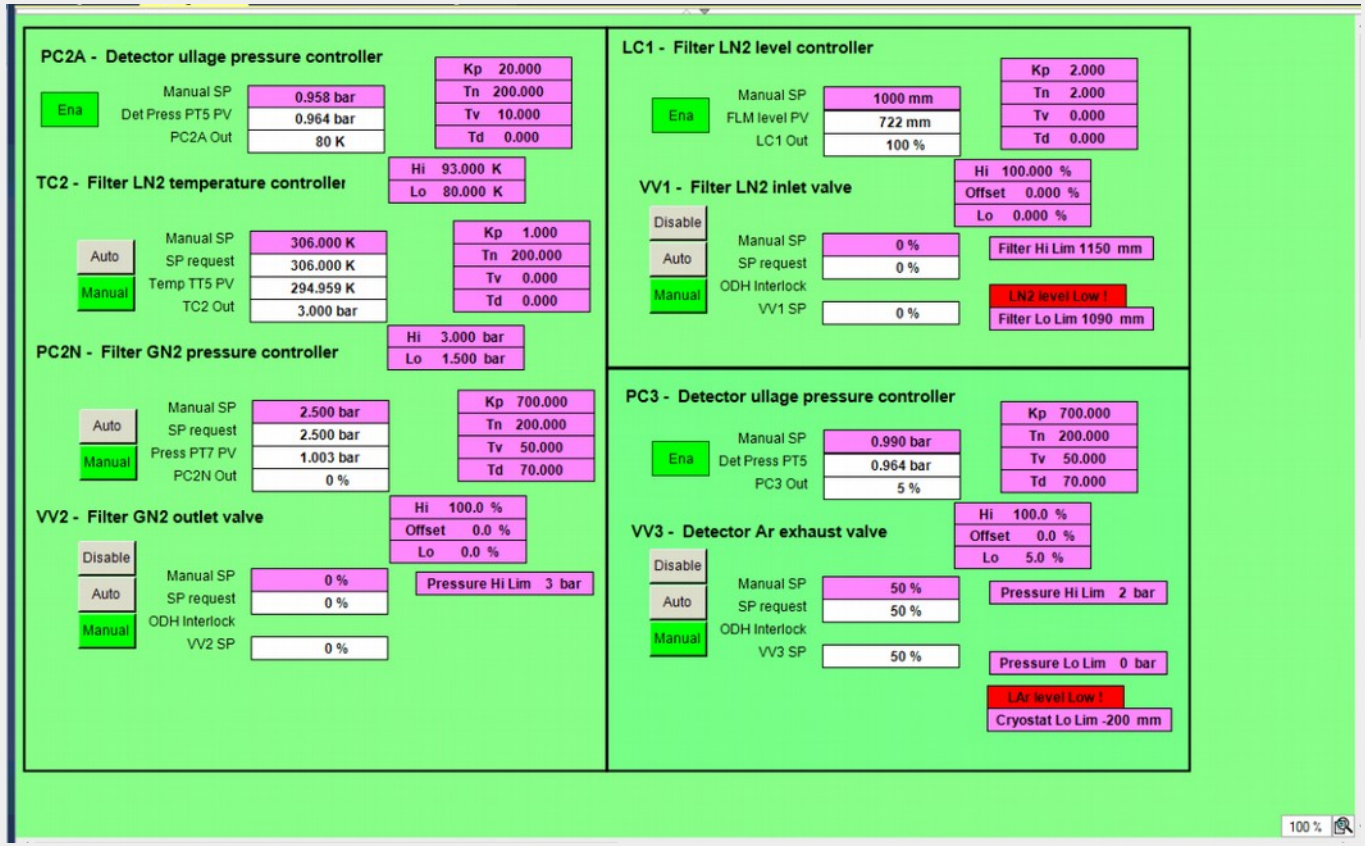


Allows valve control

PID parameters

Control loop configuration

# PLC UI windows: Sensor overview page

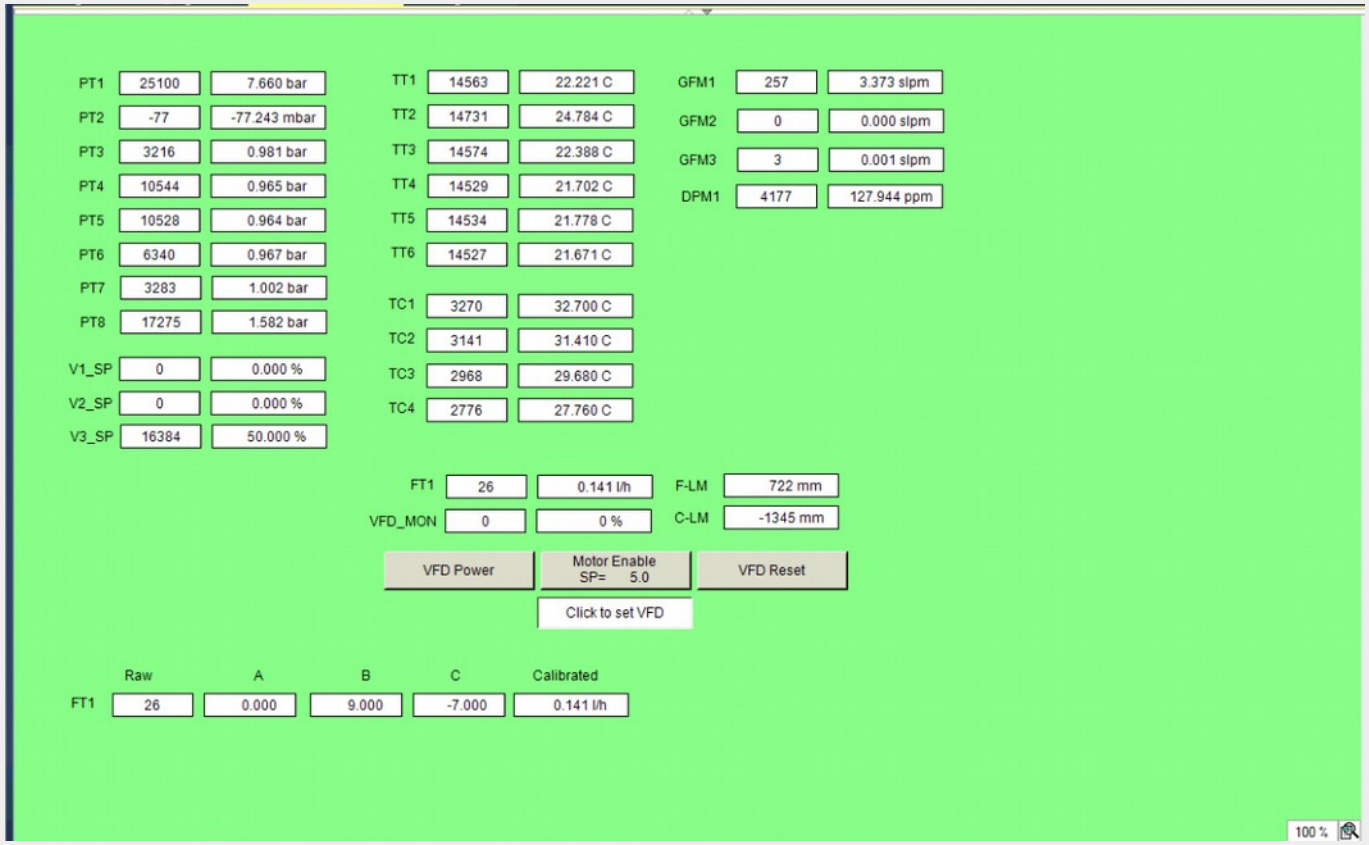


Raw data, failures

Calibration parameters

Low level debugging

# PLC UI windows: Alarms page

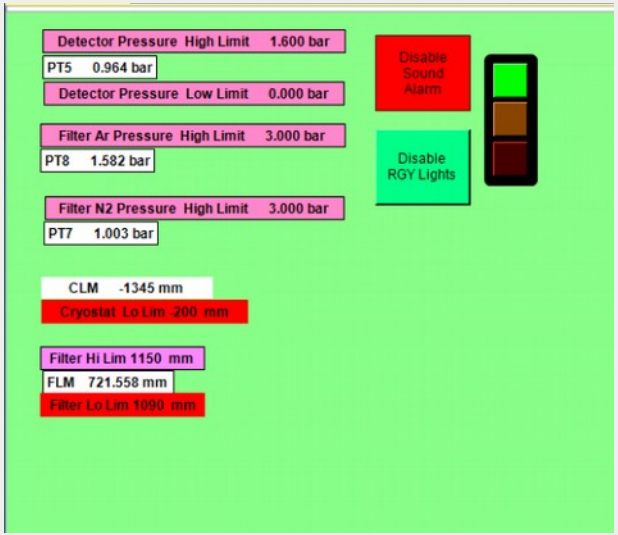


Remote view of alarms

Visual view of sound alarm

# PID realization

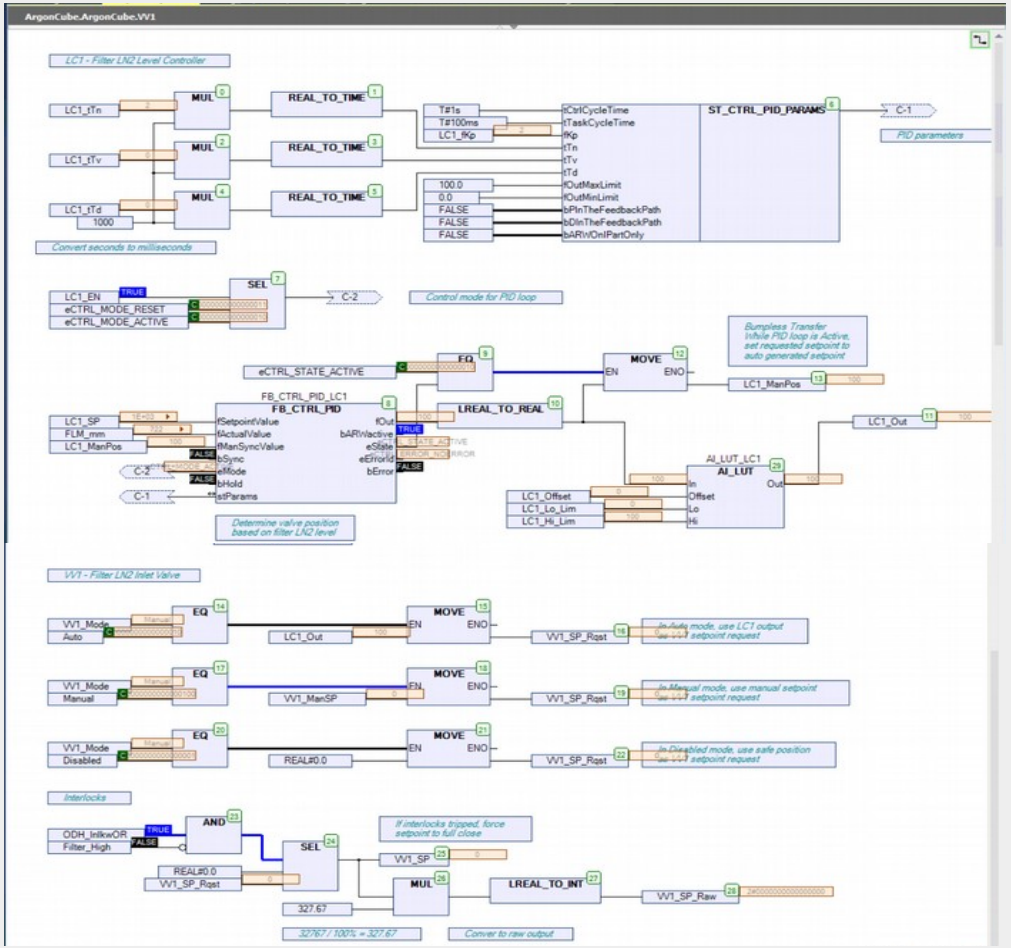


Tested on VV1 & VV2

Filter with GN2

Controlling pressure in the ullage

# PID tests

V1 - Gas N2 in

V2 N2 exhaust

Goal - stabilize P at SP

Input disturbances:

abrupt change of V1

abrupt change of SP

Works very well!

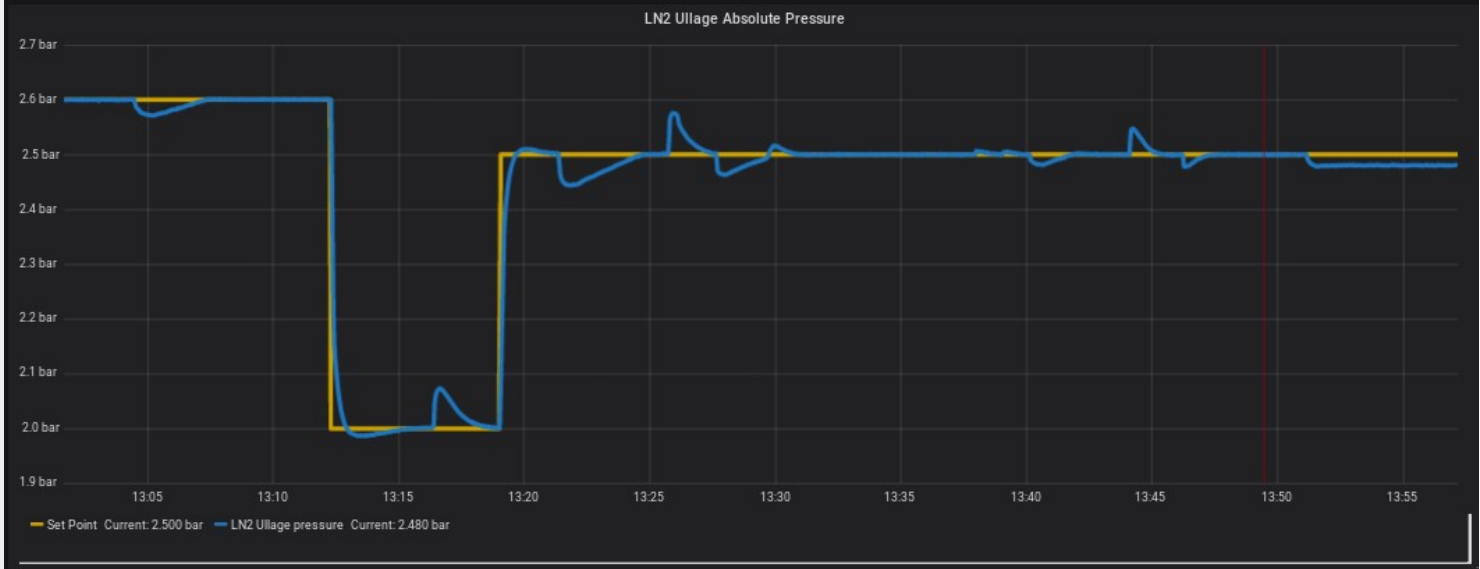

# PLC data flow to/from external subsystems

Interface core -
pymodbus
(Python ModBus library)

Uses PLC global variables
by ModBus direct R/W access

Main data flows:

SC units -> argoncube02
(Levels)

arconcube02 -> PLC

PLC ->argoncube02

In PLC - alarms on data flow failures

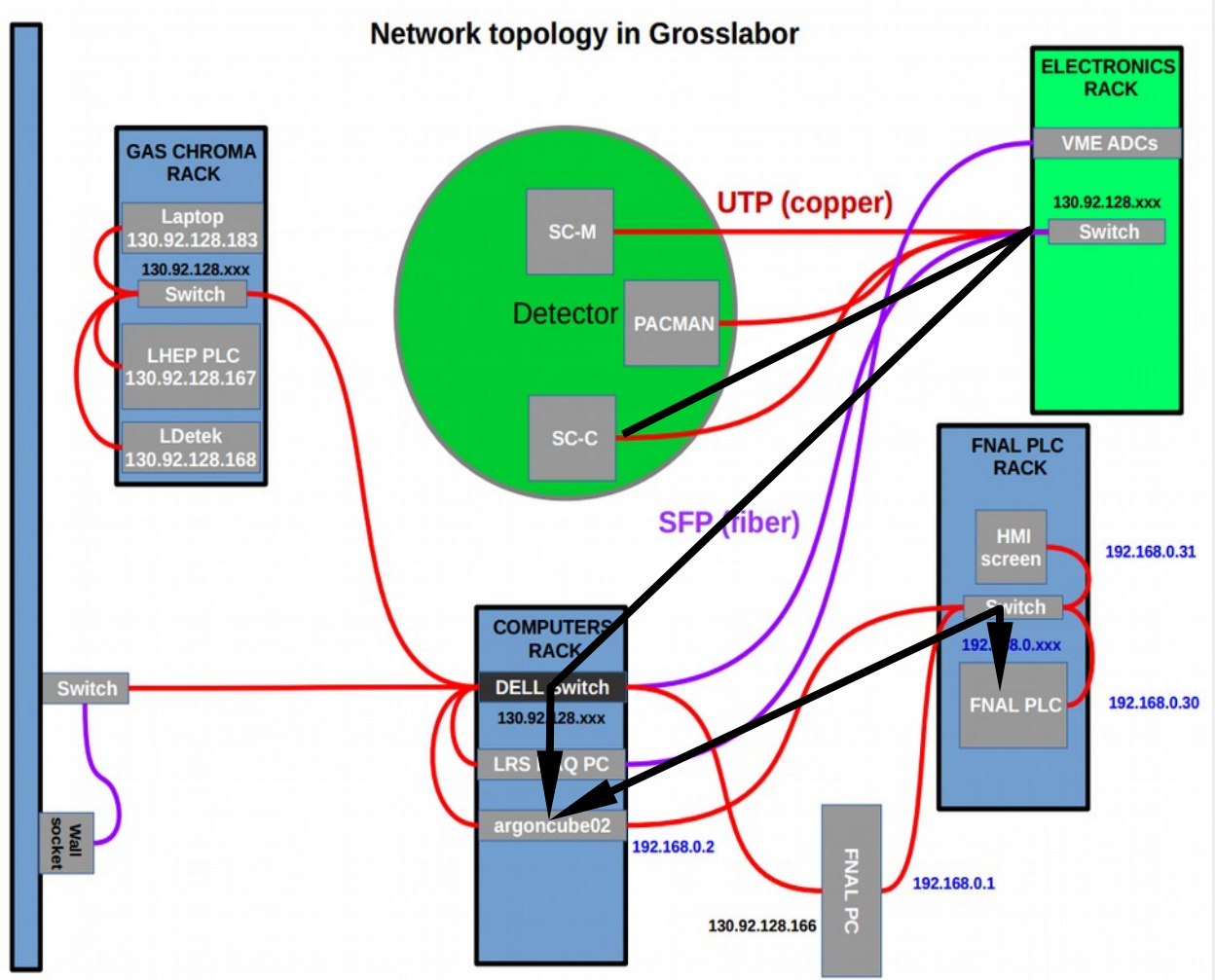

# Sensor data on argocncube02 (running Influxdb & Grafana)

# SingleModule PLC control : Summary

PLC is configured and programmed - ready for Single Module run in March

PIDs parameters to be tuned at the run start

Safety subsystem tested and ready (Parameters, Link failure, ODH, Red Button)

We are on low start for the run.

Big thanks for the FNAL team: Ting Miao, Trevor Nichols, Matthew Micheli !