Enabling Progress for Single Photon Detection Systems

Jean-François Pratte
S. Carrier, K. Deslandes, C.-F. Gauthier, V. Gauthier,
P. Gendron, M. Labrecque-Dias, P. Martel-Dion, F. Nolet,
S. Parent, C. Richard, T. Rossignol, N. Roy, N. St-Jean,
A. Turala, F. Vachon,
R. Fontaine, S. A. Charlebois

Université de Sherbrooke, Canada

CPAD Instrumentation Frontier Workshop 2021
March 18-22
Stony Brook, NY, USA

UNIVERSITÉ DE SHERBROOKE

GRAMS

Photodetection Module : Photon-to-Digital Converters (aka Digital SiPM) and Enabling Technologies

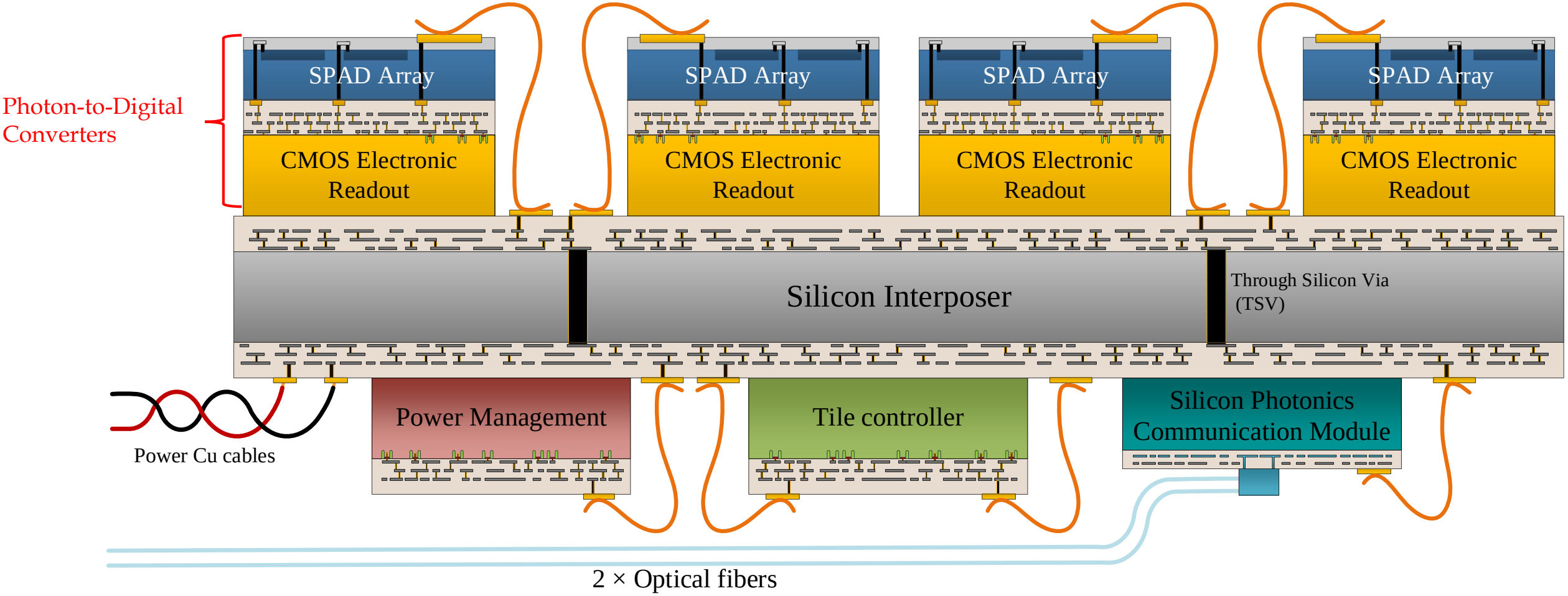

Enabling Progress for Single Photon Detection Systems

Photodetectors

Priority Research Direction	Technical Requirements
PRD 7: Extend wavelength range and develop new single-photon counters to enhance photodetector sensitivity	TR 1.3, TR 1.4, TR 2.8, TR 2.9, TR 3.6, TR 4.1,
PRD 8: Advance high-density spectroscopy and polarimetry to extract all photon properties	TR 4.1, TR 4.2
PRD 9: Adapt photodetectors for extreme environments	TR 1.4, TR 2.3, TR 2.9, TR 2.1 TR 5.10, TR 5.1
PRD 10: Design new devices and architectures to enable picosecond timing and event separation	TR 1.3, TR 1.4, TR 2.7, TR 4.3,
PRD 11: Develop new optical coupling paradigms for enhanced or dynamic light collection	TR 1.3, TR 1.4, TR 2.7, TR 2.8, TR 3.5, TR 3.6,

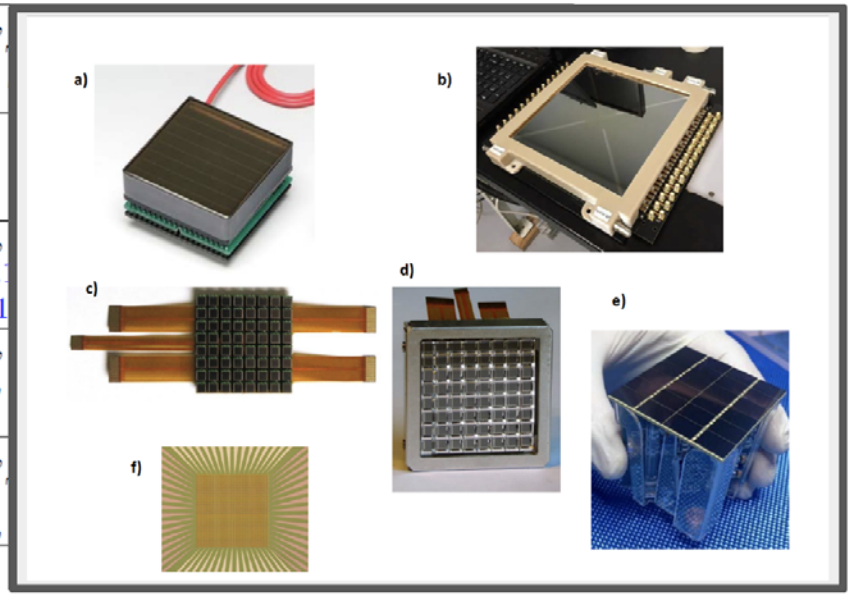

Connections outside of HEP

- **physics experiments and detectors at the light sources and in Astronomy**
- **Time-Of-Flight (TOF) PET medical imaging, biology, quantum computers, national security**

Facilities and Capabilities

- **close connections to industry for fabrication of devices and the procurement of materials.**
- **new infrastructure through upgrades at existing DOE facilities or partnerships with other federal facilities and industry. (eg: Ge CCD R&D, development of readout and ASICs**

Lindley Winslow Peter Krivzan (Leads) Graham Giovanetti Adriana Lita Felix Sefkow

55

From Analog to Digital Silicon Photomultiplier

UNIVERSITÉ DE SHERBROOKE

Analog and Digital Silicon Photomultiplier (SiPM): The Definition

Single photon avalanche diode (SPAD) is the basic unit cell of **analog and digital SiPM**

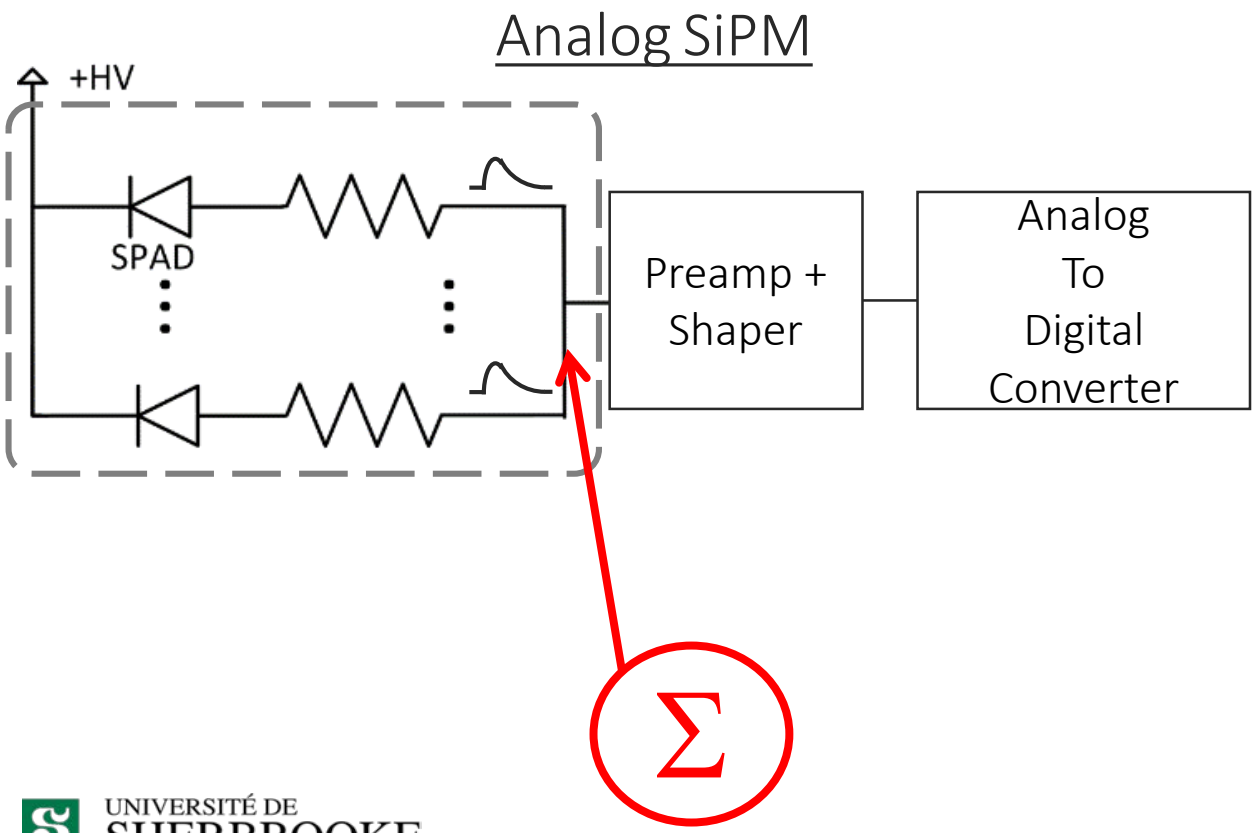

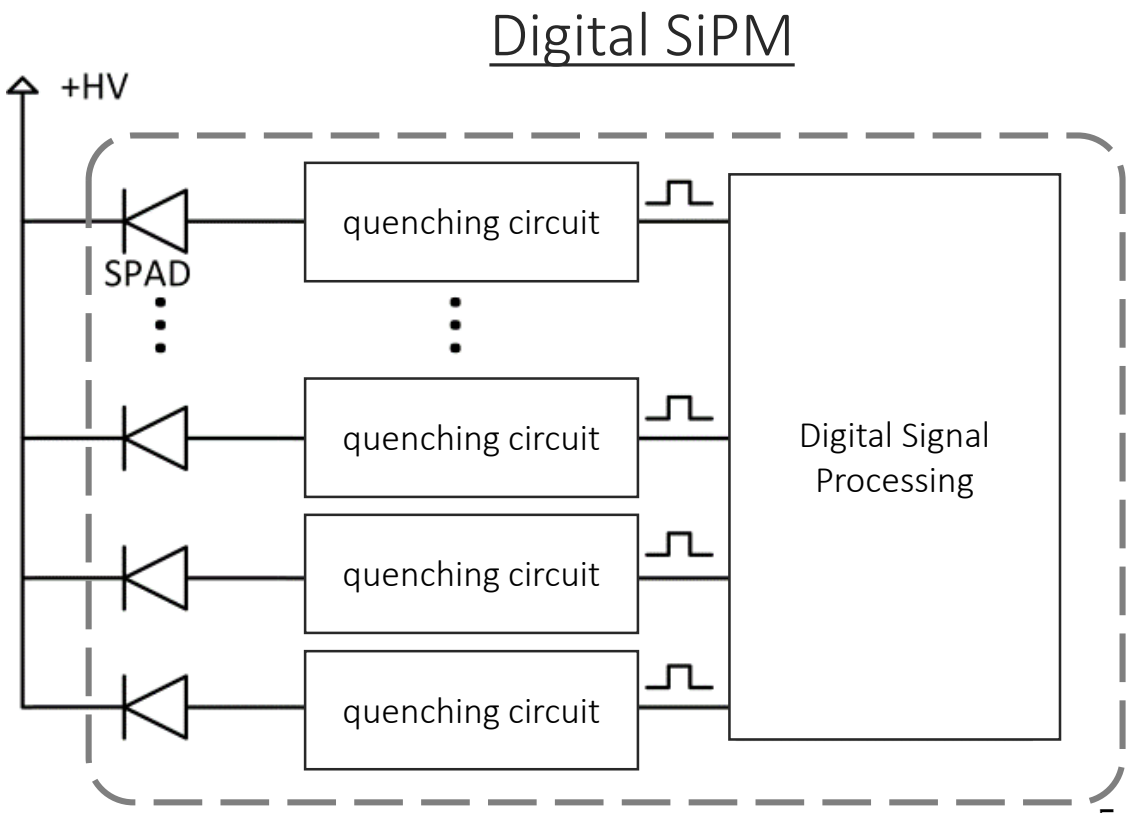

The Analog SiPM Paradox

- A SPAD is a **Boolean detector ("0" or "1"): digital information available at the sensor level**

- **Analog SiPM = Sum of boolean detectors (array of SPAD) to get a linear response…**

- Then, use a current/transimpedance amplifier + shaper + ADC

To digitize the data… again!

jean-francois.pratte@usherbrooke.ca

Enabling Progress for Single Photon Detection: Digital SiPM Advantages

- **Each SPAD is coupled one-to-one** with its individual readout circuit
- **Photon-to-bit conversion** at the sensor level
- Improved noise immunity
- Output capacitance is not an issue (compared to analog SiPM)
- Single-photon counting over the entire dynamic range
- Control over each SPAD: **faulty or radiation damaged = shut off**
- Mitigates afterpulsing noise
- No trigger = Low power consumption

3D versus 2D Photon-to-Digital Converters

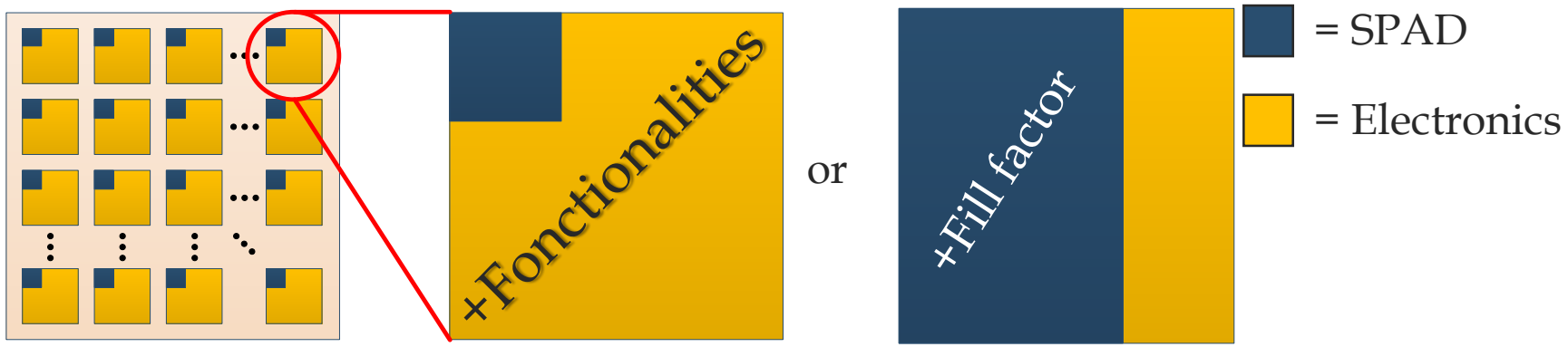

The solution:
3D vertical integration

- Enables high photosensitive fill factor
  with
- Advanced digital signal processing
- Choice of SPAD optimal technology
  with
- Choice of CMOS optimal technology for application specific functions

Photodetection Module

- Silicon-based solution for **cryogenic instrumentation** → coefficient of thermal expansion matching
  - Particle physics instrumentation: liquid argon and liquid xenon experiments
    - nEXO (neutrino)
    - ARGO (dark matter)
  - Quantum communication (quantum key distribution satellite receiver)
- Medical Imaging
  - Positron emission tomography (PET)
  - Computed tomography (CT)
- Neutron Imaging

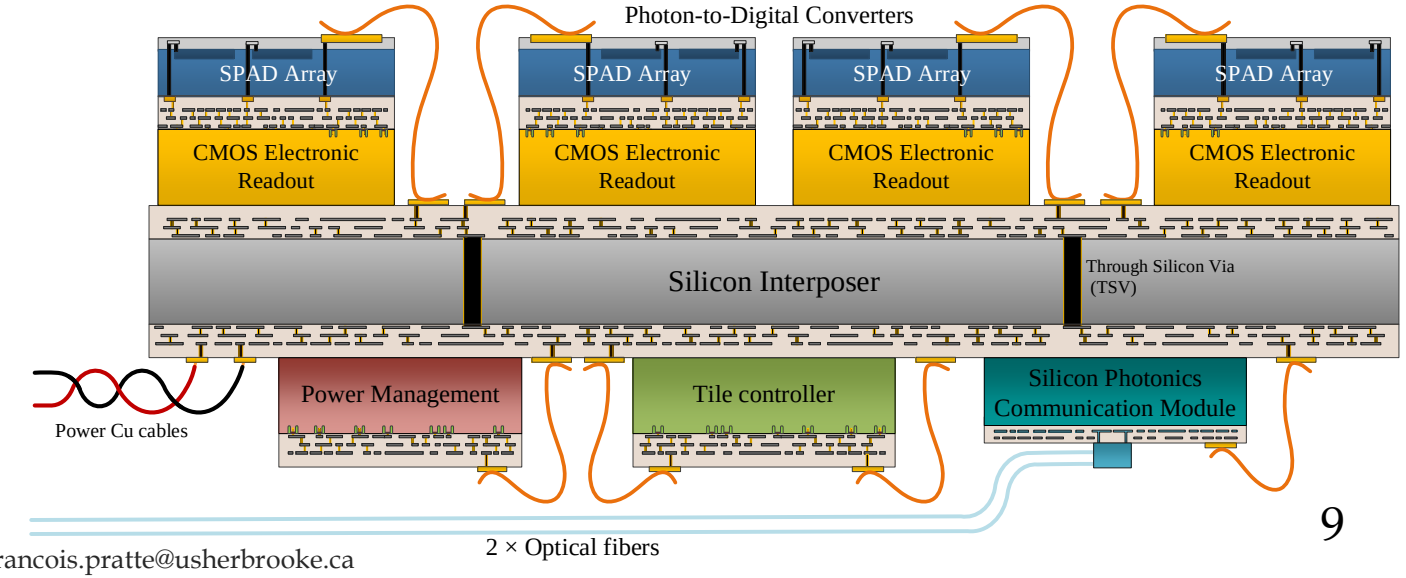

Photodetection Module – 3D Photon-to-Digital Converters

- SPAD array: Custom process Université de Sherbrooke – Teledyne-Dalsa
  - SPAD wafer over RDL wafer enabling 3D SPAD electrical and optical characterization: June 2021
  - Die-to-wafer process: February 2022
  - SPAD wafer over CMOS readout: summer 2022
  - **PRD7**: Extended wavelength range in the VUV for Noble liquid experiments

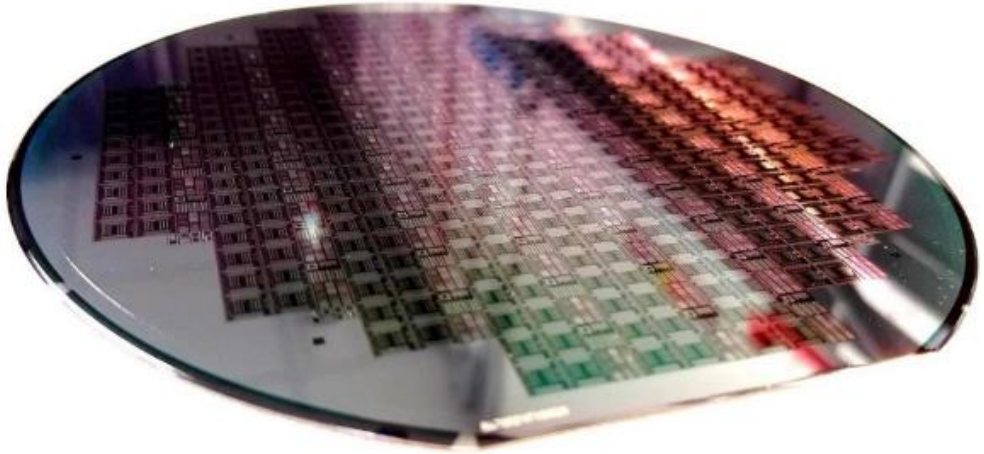

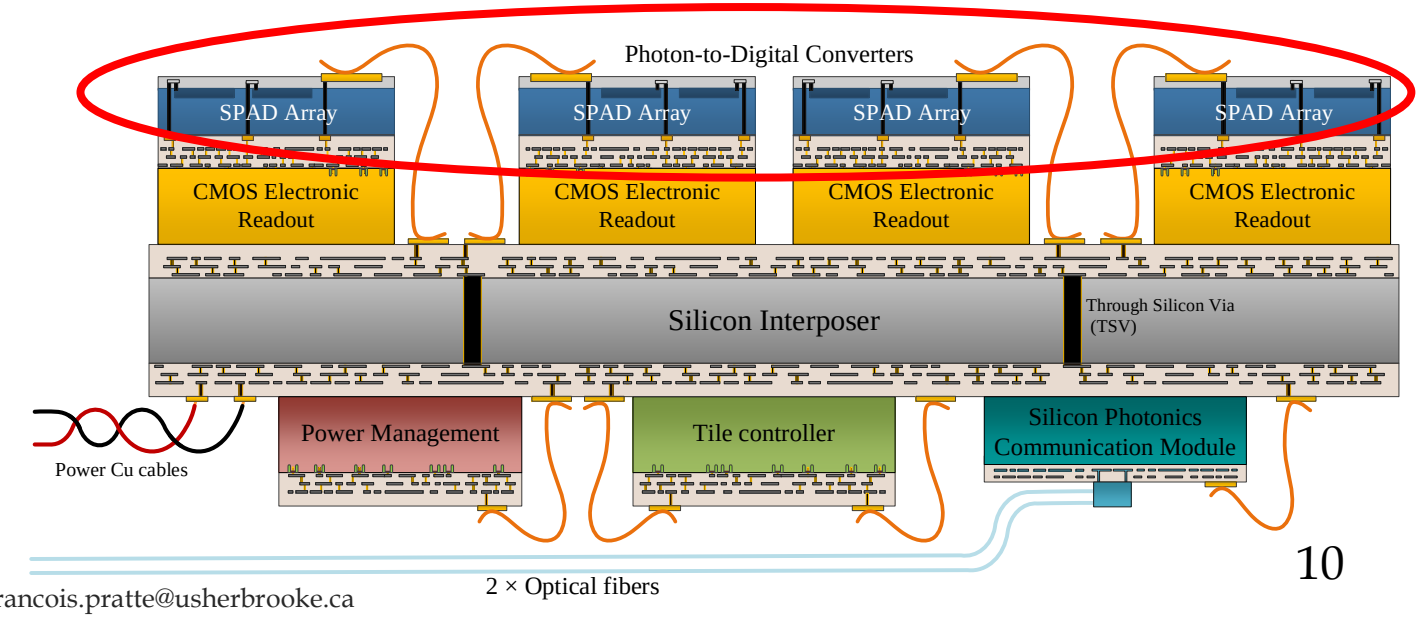

TELEDYNE IMAGING
Everywhereyoulook™

UNIVERSITÉ DE SHERBROOKE

jean-francois.pratte@usherbrooke.ca

Photodetection Module – 3D Photon-to-Digital Converters

- CMOS Electronic Readout
  1. High resolution timing application
     - Applications: Quantum key distribution, PET, CT
     - **PRD10**: Time-to-digital converter target: 5 ps resolution, sub 5 ps RMS jitter (**measurements ongoing and very promising**)
     - CMOS 65 nm
  2. Low power, large area experiments
     - Applications: Neutron Imaging and Noble liquids instrumentation
     - CMOS 180 nm
     - Rev. 2: Nov 2021

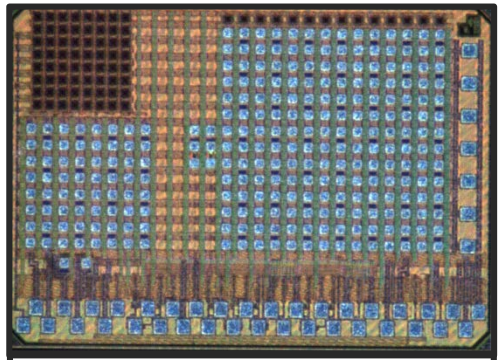

65nm CMOS high timing resolution readout (1.6 mm × 2.2 mm)

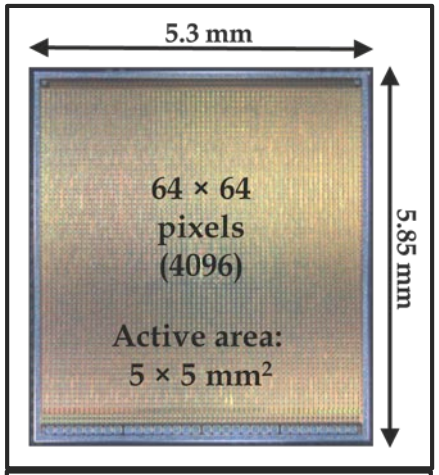

180 nm CMOS readout for low power, large area systems

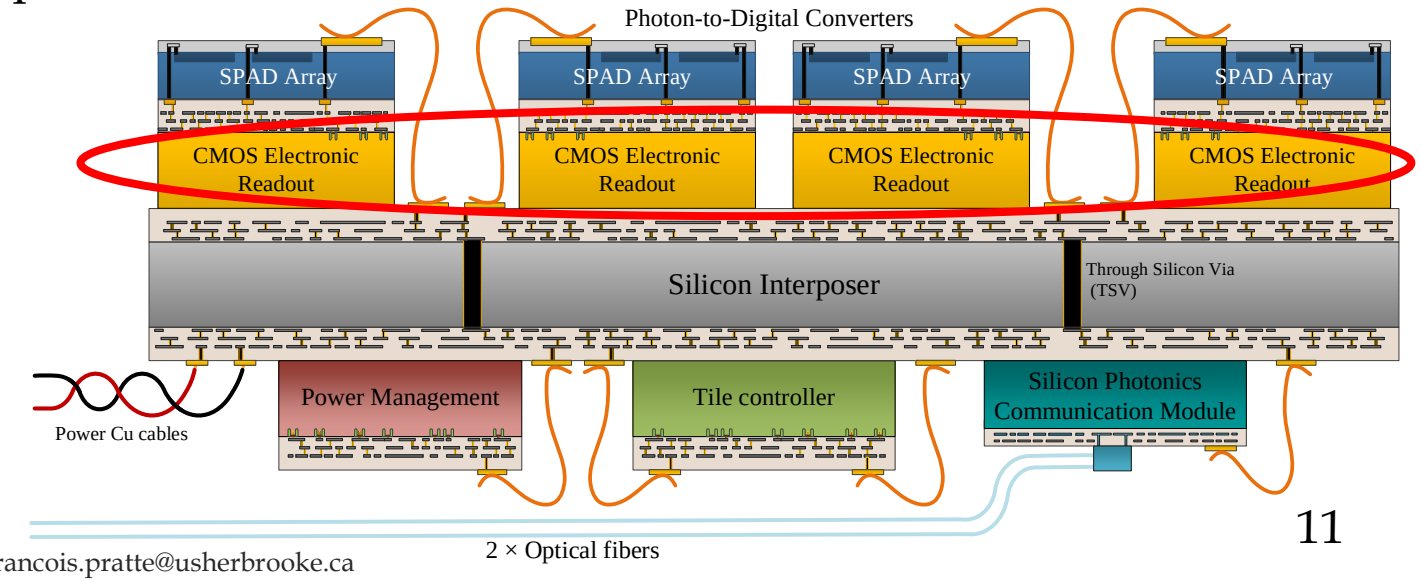

jean-francois.pratte@usherbrooke.ca

Photodetection Module – Silicon Interposer

- Silicon-based « PCB »
- Coefficient of thermal expansion matching between components: cryogenic instrumentation
  - **PRD9**: Adapt photodetectors for extreme environment (Noble liquid and space)
- Collaboration with IZM Fraunhofer (Berlin)
- 8 redistribution layers
- Initial results conclusive
- Full stack interposer testing: April 2021

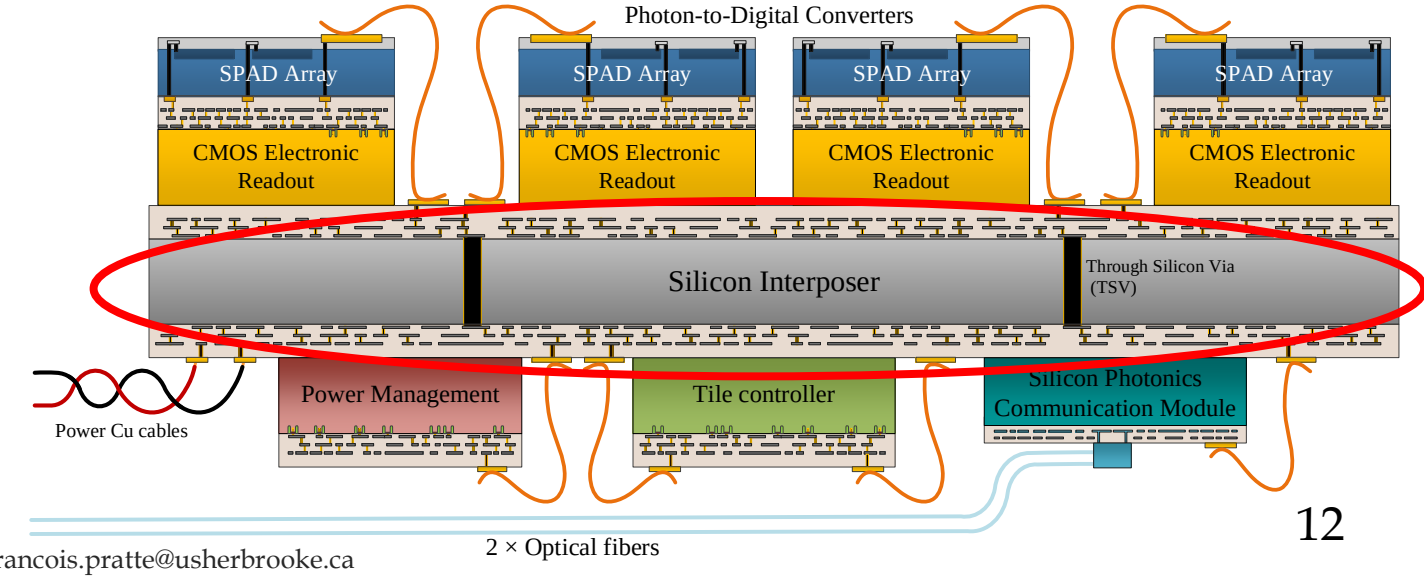

Photodetection Module – Tile Controller

- "Brain" of the photodetection module
  - Programs, controls and acquires the PDC
- Interface with silicon photonics communication module
- Array of 100 ps resolution time-to-digital converters
- Advanced triggering
- Currently under design

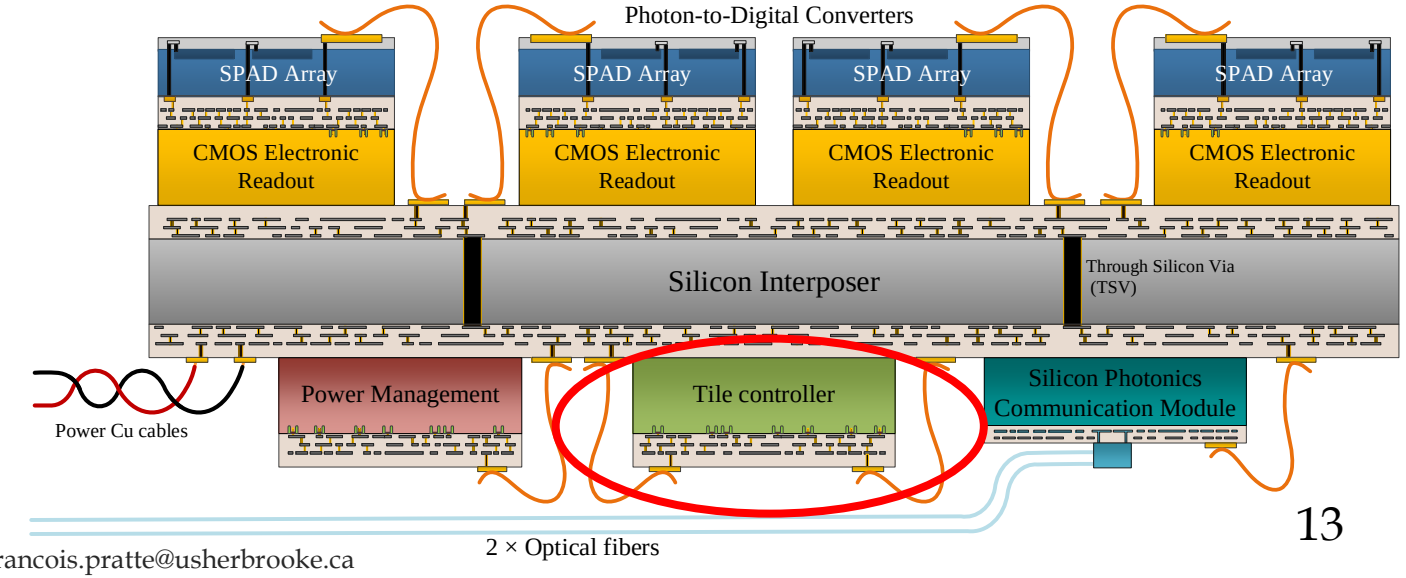

Photodetection Module – Silicon Photonics Comm Module

- Laser source at the DAQ, none on the photodetection module → **low power**
- Advanced Micro Foundry (AMF) SOI process
- 3 custom Michelson interferometric modulators
- 1 Michelson interferometric modulators from SiEPIC Library
- 3 high-speed infrared germanium photodetectors
- 1 custom micro-ring resonator
- 12 electrical I/O
- 8 photonic wirebond I/O
- 12 grating coupler I/O
- Device in fab, receiving May 2021
- Quantum computing interface

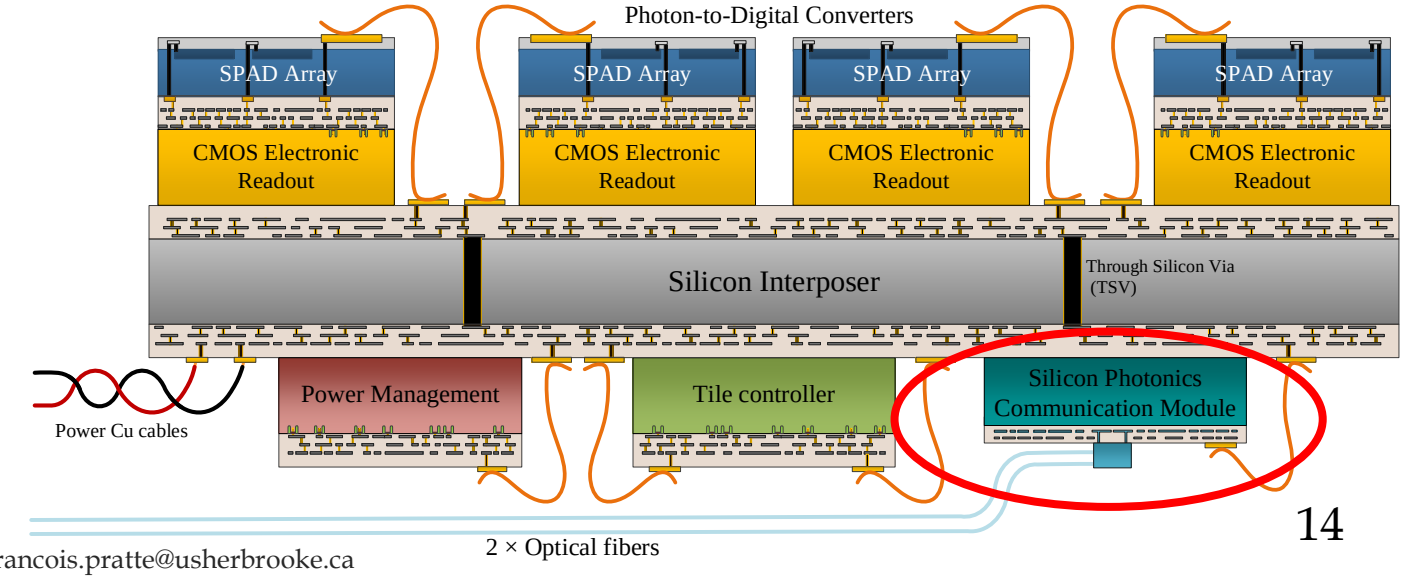

Conclusion

- Single photon instrumentation plays a key role in various fields
  - Game changer for many experiments
- It is strategic to support R&D of Photon-to-digital converters and their enabling technologies
  - **PRD7: wavelength range, PRD9: extreme environment, PRD10: timing**
- Requires cross-cutting expertises
- New photodetection module in progress
  - Scalability
  - Operation in various environmental condition (room temperature, cryogenic, space)
  - Improved performances
    - Single photon resolution and counting over the entire dynamic range
    - Timing resolution
    - Digital signal processing (Smart data acquisition)

jean-francois.pratte@usherbrooke.ca

Selected Publications from our Team

- **3D Photon-To-Digital Converter for Radiation Instrumentation: Motivation and Future Works. (2021). Pratte, J.-F.; Nolet, F.; Parent, S.; Vachon, F.; Roy, N.; Rossignol, T.; Deslandes, K.; Dautet, H.; Fontaine, R.; Charlebois, S.A. *MDPI Sensors*. 21, 598. https://doi.org/10.3390/s21020598**
- **Roadmap toward 10 ps time-of-flight PET challenge.** (2020). Lecoq, P.; Morel, C.; Pratte, J-F. et al. *Physics in Medicine and Biology*. Institute of Physics and engineering in Medicine.
- **22 µW, 5.1 ps LSB, 5.5 ps RMS jitter Vernier time-to-digital converter in CMOS 65 nm for single photon avalanche diode array.** (2020). Nolet, F.; Roy, N.; Carrier, S.; Bouchard, J.; Fontaine, R.; Charlebois, S. A.; Pratte, J-F. *Electronics Letters*. 56(9): 424-426.
- **Embedded time of arrival estimation for digital photomultipliers with in-pixel TDCs.** (2020). Lemaire, W.; Nolet, F.; Dubois, F.; Corbeil Therrien, A.; Pratte, J-F.; Fontaine, R. *Nuclear Inst. And Methods in Physics Research, A*. 163538
- **Dark Count Resilient Time Estimators for Time-of-Flight PET.** (2020). Lemaire, W.; Corbeil Therrien, A.; Pratte, J-F.; Fontaine, R. *IEEE Transactions on Radiation and Plasma Medical Sciences*. 4(1): 24-29
- **Measuring count rates free from correlated noise in digital silicon photomultipliers.** Vachon, F., Parent, S., Nolet, F., Dautet, H., Pratte, J. F., & Charlebois, S. A. (2020). Measurement Science and Technology.
- **A 256 Pixelated SPAD Readout ASIC with in-Pixel TDC and Embedded Digital Signal Processing for Uniformity and Skew Correction.** (2019). Nolet, F.; Lemaire, W.; Dubois, F.; Carrier, S. G.; Samson, A.; Charlebois, S. A.; Fontaine, R.; Pratte, J-F. *Nuclear Inst. And Methods in Physics Research, A*. 162891
- **Record breaking timing resolution with a room temperature single photon detector - Two photons timing resolution of record-breaking low jitter SPADs measured by Time Tagger Ultra HiRes.** (2019), Application Note Si-0004. M. Kolarczik, H. Fedder, M. Wick, F. Nolet, S. Parent, N. Roy, and J.-F. Pratte
- **Single Photon Avalanche Diodes and Vertical Integration Process for a 3D Digital SiPM using Industrial Semiconductor Technologies.** (2nd position NSS student competition – oral prensentation). (2018). Parent, S.; Côté, M.; Vachon, F.; Groulx, R.; Martel, S.; Dautet, H.; Charlebois, S. A.; Pratte, J-F. *2018 IEEE NSS-MIC Conference Record*. 2018 IEEE NSS-MIC, Sydney, Australia.
- **Energy discrimination for positron emission tomography using the time information of the first detected photons.** (2018). Corbeil Therrien, A.; Lemaire, W.; Lecoq, P.; Fontaine, R.; Pratte, J-F. *Journal of Instrumentation*. 13(1): p01012.

Selected Publications from our Team

- **Quenching Circuit and SPAD Integrated in CMOS 65 nm with 7.8 ps FWHM Single Photon Timing Resolution.** (2018). Nolet, F.; Parent, S.; Roy, N.; Mercier, M.-O.; Charlebois, S. A.; Fontaine, R. ; Pratte, J-F. *MDPI - Instrument - Special Issue Advances in Particle Detectors and Electronics for Fast Timing*. 2(4)
- **Digital SiPM channel integrated in CMOS 65 nm with 17.5 ps FWHM single photon timing resolution**. (2017). Nolet, F. and Dubois, F. and Roy, N. and Parent, S. and Lemaire, W. and Massie-Godon, A. and Charlebois, S. A and Fontaine, R. and Pratte, J.-F. *Nuclear Instruments and Methods in Physics Research Section A,* 912: 29-32.
- **TDC Array Trade-Offs in Current and Upcoming Digital SiPM Detectors for Time-of-Flight PET**. (2017). Tetrault, M.-A.; Lemaire, W.; Corbeil-Therrien, A.; Fontaine, R.; Pratte, J.-F. *IEEE Transactions on Nuclear Science*. 64(3): 925-932.
- **Low Power and Small Area, 6.9 ps RMS Time-to-Digital Converter for 3D Digital SiPM**. (2017). Roy, N. and Nolet, F. and Dubois, F. and Mercier, M-O. and Fontaine, R. and Pratte, J.-F. *IEEE Transactions on Radiation and Plasma Medical Sciences*. 10(6): 486-494.
- **A 2D Proof of Principle Towards a 3D Digital SiPM in HV CMOS with Low Output Capacitance**. (2016). Nolet F, Rhéaume V-P, Parent S, Charlebois SA, Fontaine R, Pratte J-F. *IEEE Transactions on Nuclear Science*. 63(4): 2293-2299.
- **Implementation study of Single Photon Avalanche Diodes (SPAD) in HV CMOS 0.8 µm technology**. (2015). Berube BL., Rhéaume V-P., Parent S., Maurais L., Corbeil Therrien A., Charlebois SA., Fontaine R., Pratte J-F. *IEEE Transactions on Nuclear Science*. 62(3): 710-718.
- **Modeling of Single Photon Avalanche Diode Array Detector for PET Applications**. (2014). Corbeil Therrien A., Bérubé B.-L., Charlebois S., Lecomte R., Fontaine R., Pratte J.-F. *IEEE Transactions on Nuclear Science.* 61(1): 14-22.
- **Dark Count Impact for First Photon Discriminators for SPAD Digital Arrays in PET**. (2014). Tétrault M.-A., C. Therrien A., Desaulniers Lamy A., Boisvert A., Fontaine R., Pratte J.-F. *IEEE Transactions on Nuclear Science*. 62(3): 719-726.
- **Real-Time Discreet SPAD Array Readout Architecture for Time of Flight PET**. (2014). Tétrault M.-A., Desaulniers Lamy É., Boisvert A., Thibaudeau C., Dubois F., Fontaine R., Pratte J.-F. *IEEE Transactions Nuclear Science.* 62(3): 1077-1082.

A team's work

Université de Sherbrooke

- **Serge Charlebois**
- **Réjean Fontaine**
- **Roger Lecomte**
- **Henri Dautet**
- Julien Sylvestre
- David Danovitch
- Caroline Paulin
- Catherine Pepin
- Danielle Gagné
- Étienne Paradis
- Étienne Grondin
- Konin Koua
- Simon Carrier
- Nicolas Roy
- Frédéric Nolet
- Samuel Parent
- Audrey Corbeil Therrien
- Benoit-Louis Bérubé
- Marc-André Tétrault
- Frédéric Vachon
- Tommy Rossignol
- Gabriel St-Hilaire
- Jacob Deschamps
- Xavier Bernard
- Thomas Dequivre
- William Lemaire
- Philippe Martel-Dion
- Nicolas St-Jean
- Artur Turala
- Luc Maurais
- Maxime Côté
- Vincent Philippe Rhéaume
- Étienne Desaulniers Lamy
- Alexandre Boisvert
- Michel Labrecque-Dias
- Pascal Gendron
- Arnaud Samson
- Jonathan Bouchard
- Frédérik Dubois
- Marc-Olivier Mercier
- Frédéric Bourque
- Keven Deslandes
- Charles-Frédérick Gauthier
- Valérie Gauthier

Collaborators

- Fabrice Retiere (Triumf)
- Lorenzo Fabris (ORNL)
- Simon Viel (Carleton)
- nEXO Collaboration
- nEXO Canada

Teledyne-DALSA Semiconducteur Inc

- Claude Jean (CEO)
- Stephane Martel
- Robert Groulx
- Maxime Côté

TELEDYNE IMAGING Everywhereyoulook™

NSERC CRSNG

Arthur B. McDonald Canadian Astroparticle Physics Research Institute

INNOVATION.CA CANADA FOUNDATION FOR INNOVATION | FONDATION CANADIENNE POUR L'INNOVATION

TRIUMF

Fonds de recherche sur la nature et les technologies Québec

RESMIQ Regroupement Stratégique en Microsystèmes du Québec

CMC MICROSYSTEMS

OAK RIDGE National Laboratory

3IT

CANADA FIRST RESEARCH EXCELLENCE FUND | APOGÉE CANADA FONDS D'EXCELLENCE EN RECHERCHE

INSTITUT QUANTIQUE

UNIVERSITÉ DE SHERBROOKE