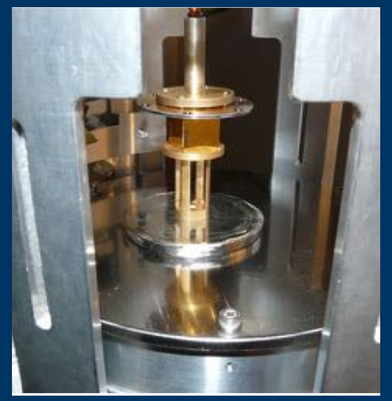

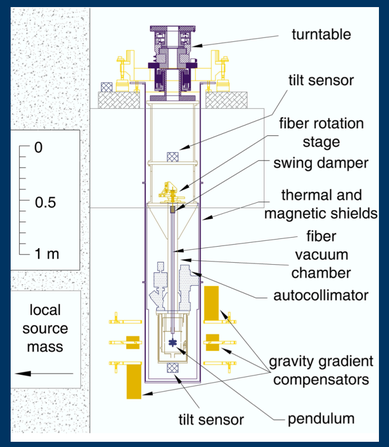

Hugely coherent detectors for fundamental physics

Comagnetometers and Accelerometers

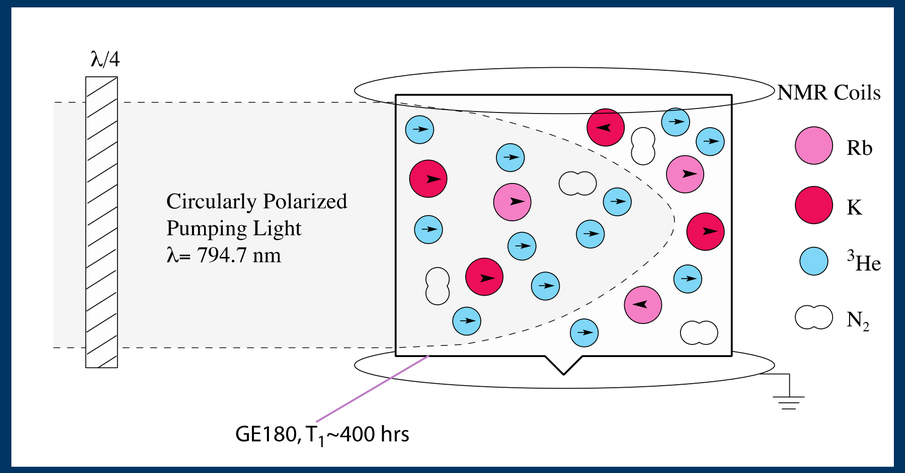

William Terrano, March 29 2021

Hugely-coherent sensors

Testing new physics with >10^{20} coherent particles

- Evade Standard Quantum Limit with very large particle numbers:
  1. suppress quantum fluctuations
  2. increases the signal size — linearly if the interaction is coherent

- Comagnetometers and torsion pendula take advantage of this:
  - set the best limits on: modifications to gravity,
  5th forces and ultra-low-mass dark matter;
  macroscopic interactions

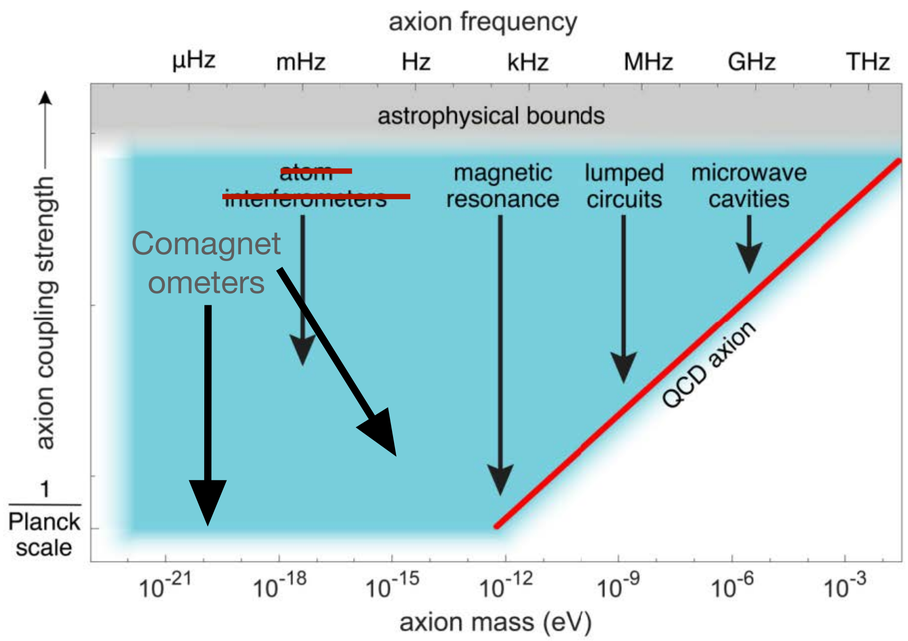

Torsion Pendulums

Physics reach of scalars

LONG-RANGE

- Fundamental Incomapatibility between GR and Standard Model
- Extremely feeble new scalar particles are widely predicted
- Long-range non-gravitational interactions of Dark Matter $V(r) = -G\frac{m_1 m_2}{r}\left(1 + \tilde{\alpha}\left[\frac{\tilde{q}}{\tilde{g}\mu}\right]_1\left[\frac{\tilde{q}}{\tilde{g}\mu}\right]_2 e^{-r/\lambda}\right)$
- Ultra-low-mass scalar dark matter direct detection

- Short-distance modifications to gravity:
  - Hierarchy Problem
  - Dark Energy — 85 μm
  - Chameleon Fields — non-renormalizable below ~20 μm

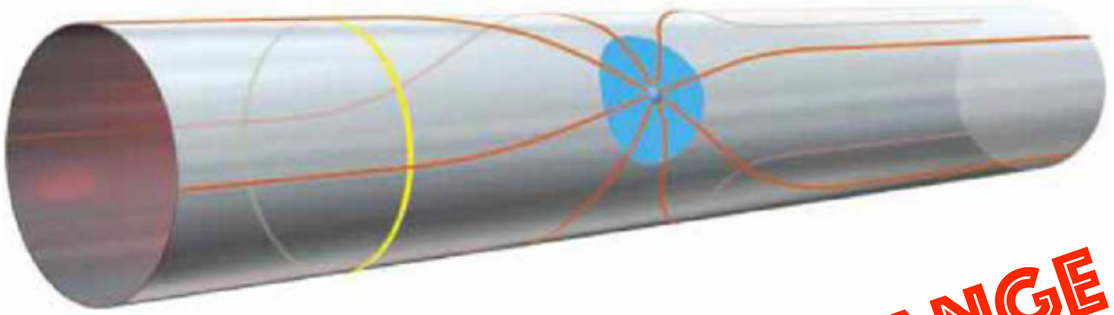

SHORT-RANGE

Torsion Pendulums

Long-Range

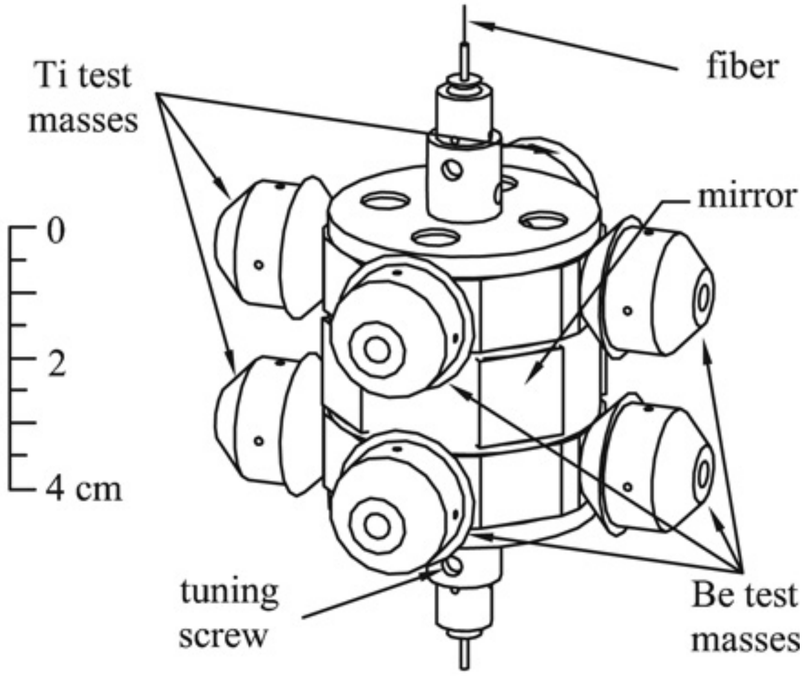

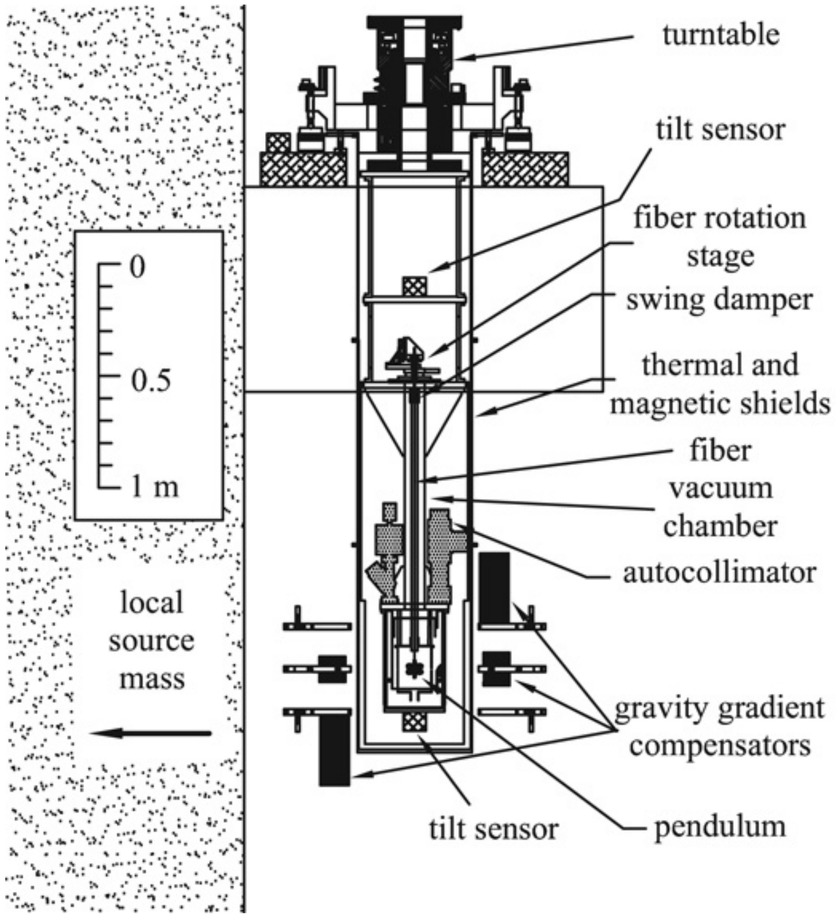

- Best limits on EP violation of dark matter
  - Direct interaction
  - Long-range interaction
- Best limits on EP violation at distances < 100 km
- Within ~10 of recent satellite-missions, but much greater detection potential

Torsion Pendulums

Future of Long-Range

- Lower noise fibers (what is the limit)?
- Systematics improvements:
  - Improve thermal stability and modeling — systematic limit for MICROSCOPE as well
  - Improve gravitational stability and modeling

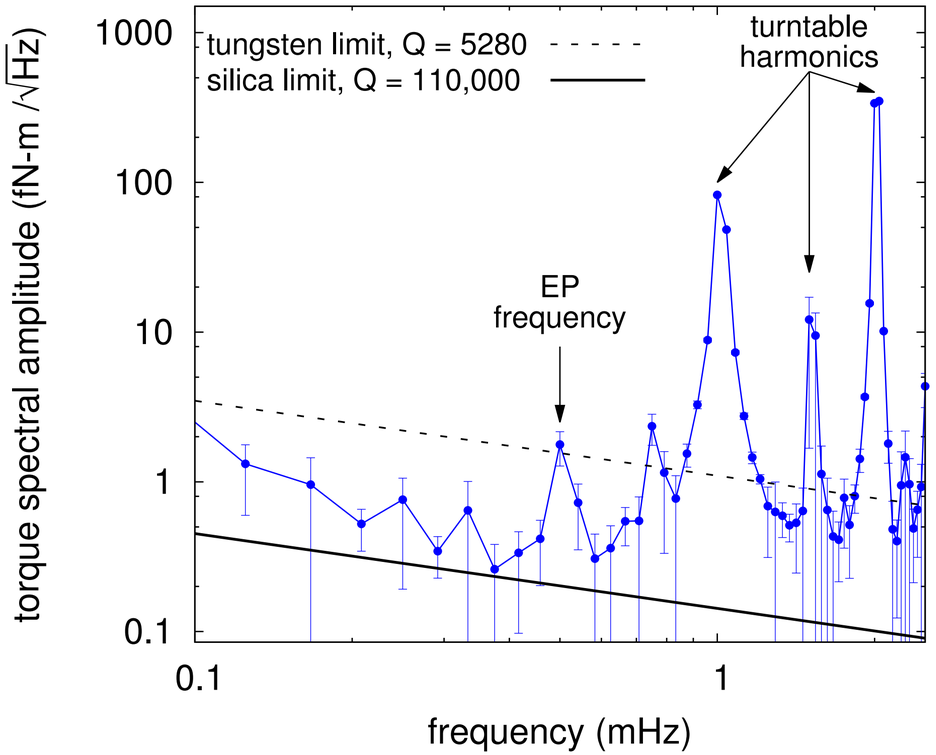

Torsion Pendulums

Short-range gravity

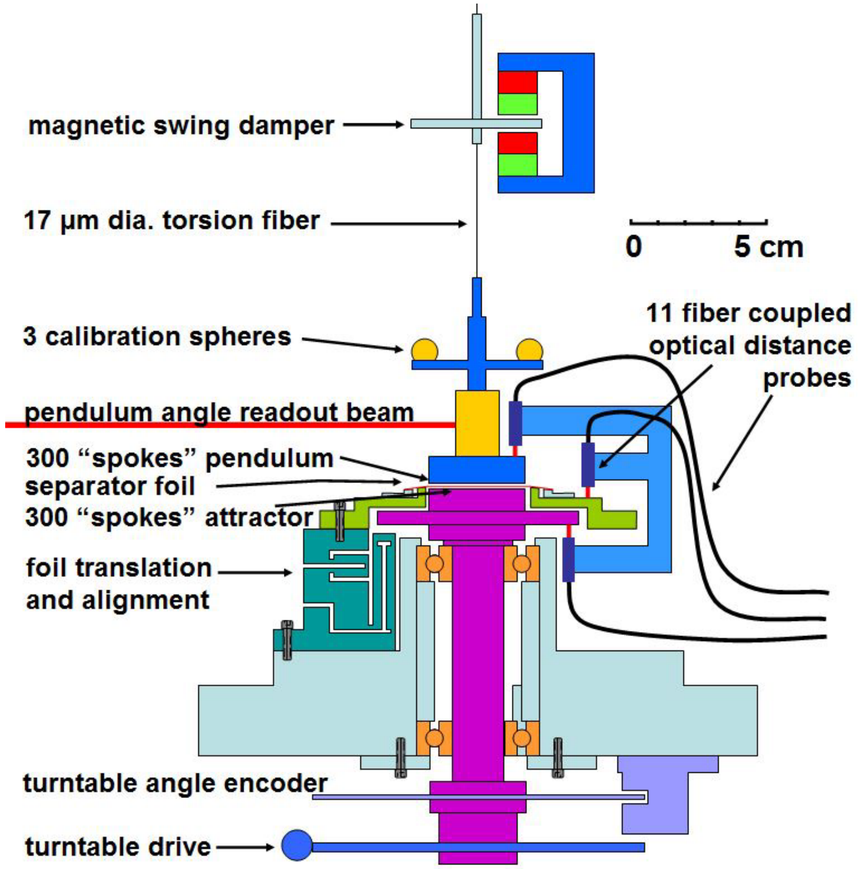

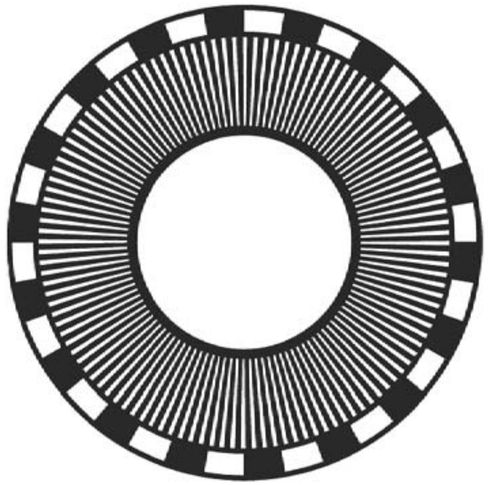

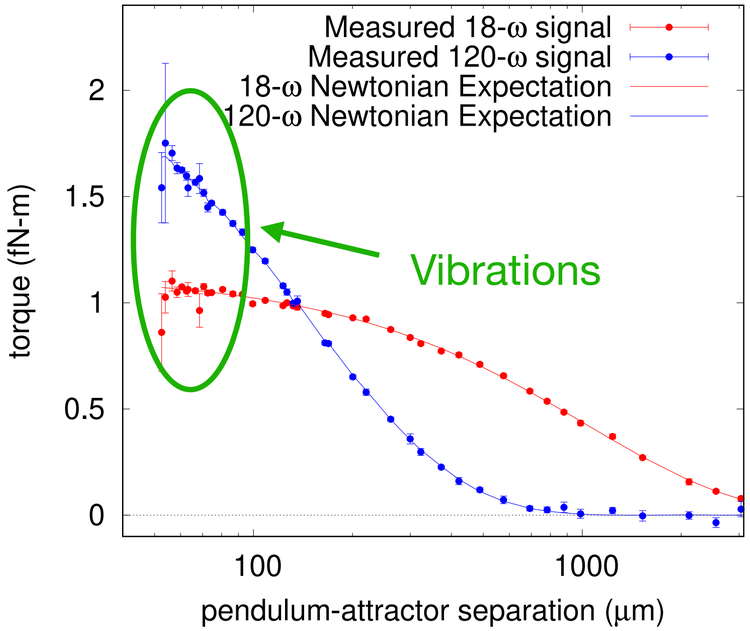

- Tests gravity at 40 microns
- Goal 25 microns
- <u>Needs:</u>
  Reduced vibrations,
  perfectly flat surfaces,
  lower patch-effect surfaces

Comagnetometry

Basic Principle

- Measure energy difference between spin-up and spin-down nuclei
- Noise limit: $\sigma_f^2 \geq \frac{12}{(2\pi)^2 (A/\rho)^2 T^3} C$
- High spin-densities possible O(50%) at atmospheric pressure [SEOP]
- magnetometer read-out is very low noise
- coherence times of many hours -> days

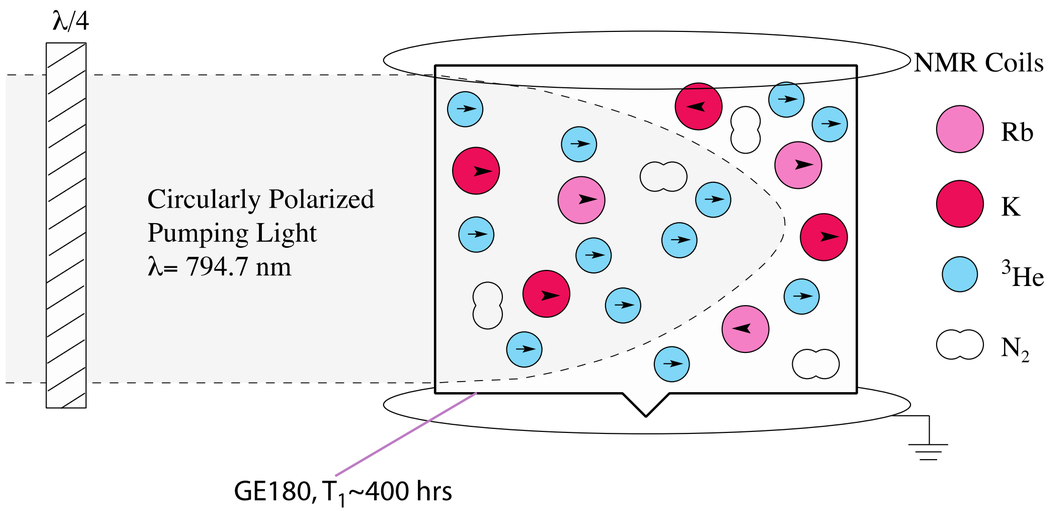

Comagnetometry

Best sensitivity in energy units

- Magnetic field drifts orders-of-magnitude larger than signal of interest: compare two spin-species

$$\omega_{\mathrm{inv}} = \omega_{\mathrm{Xe}} - \omega_{\mathrm{He}}(\gamma_{\mathrm{Xe}}/\gamma_{\mathrm{He}})$$

- Many implementations: spin-species, read-out, geometry

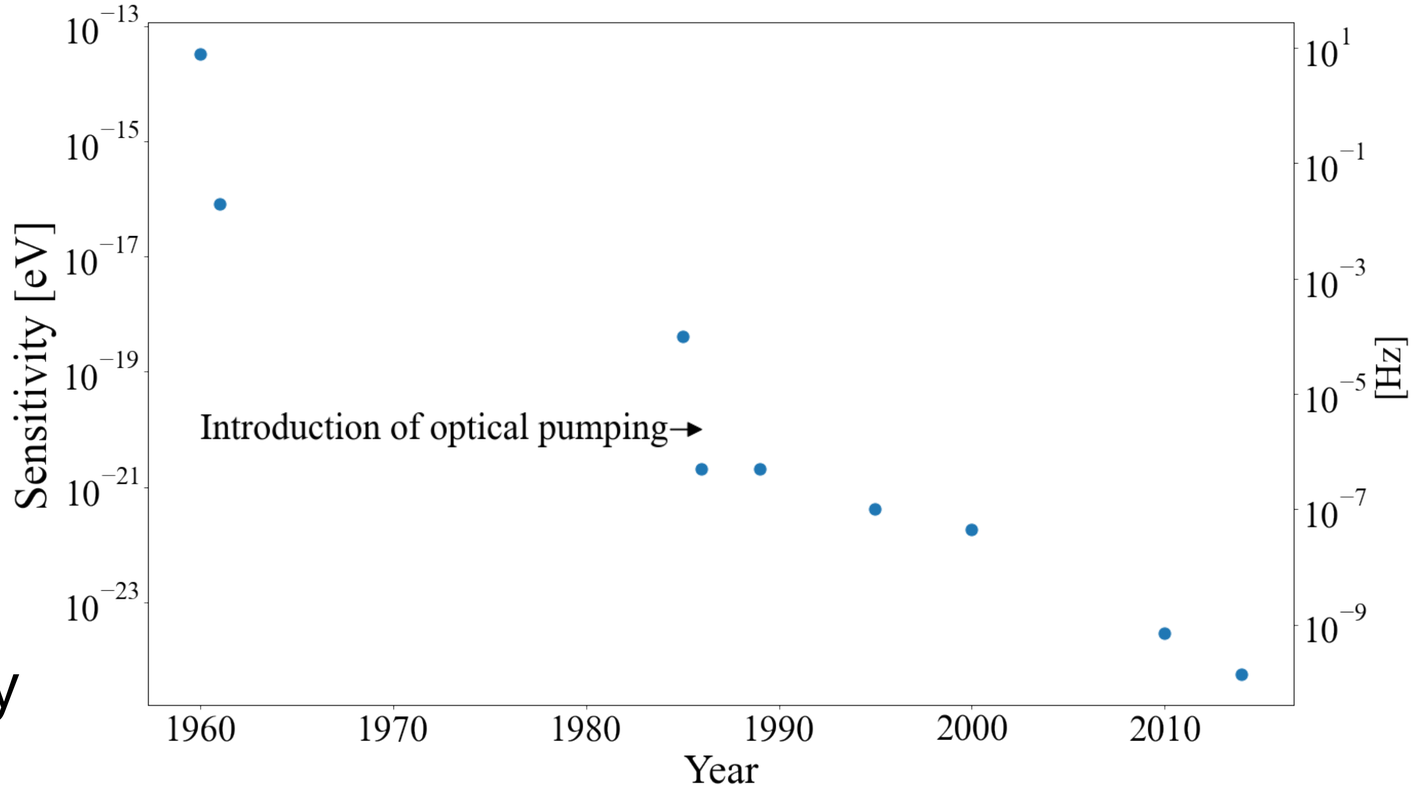

DM Signal: Energy-splitting of Spin along relative velocity direction

$$a = a_0 \cos \omega_C t$$

$$\mathcal{L} = (\partial_\mu a)\bar{\psi}\gamma^\mu\gamma_5\psi$$

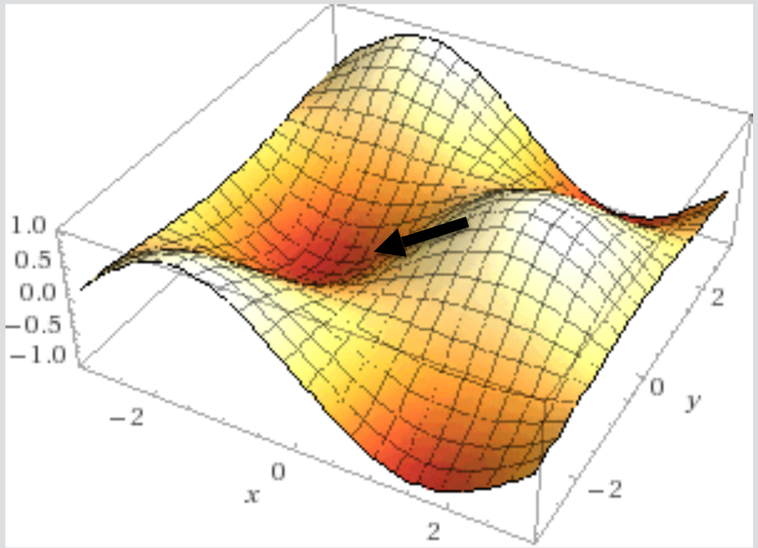

a at $t = 0$

Doubly-modulated

$$H_{\rm ax} \sim \sqrt{2\rho_{\rm DM}}\vec{v}\cdot\vec{\sigma}_\psi \cos m_{\rm a} t.$$

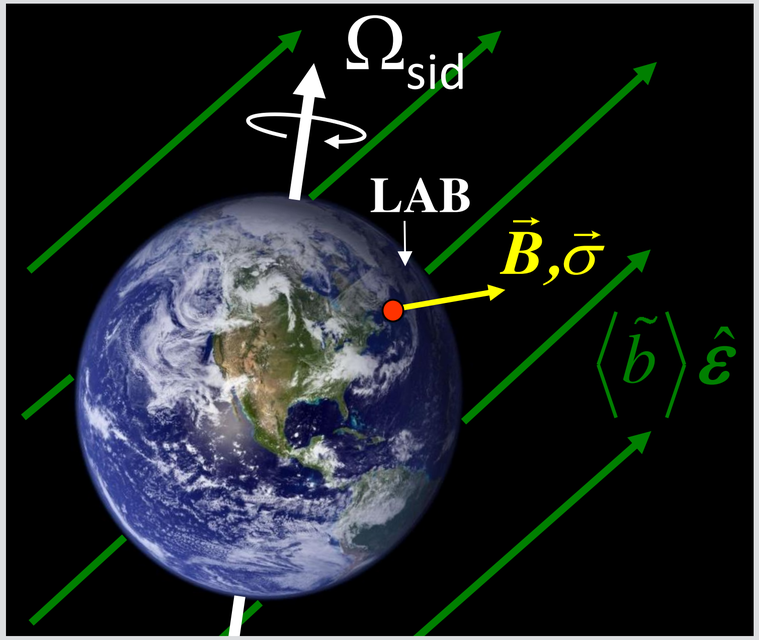

Magnitude ~ axion velocity in lab frame

DM Signal: Oscillating Torque on Spin

$$a = a_0 \cos \omega_C t$$
$$\mathcal{L} = (\partial_\mu a)\bar{\psi}\gamma^\mu\gamma_5\psi$$

$$H_{\rm ax} \sim \sqrt{2\rho_{\rm DM}}\vec{v}\cdot\vec{\sigma}_\psi \cos m_{\rm a} t.$$

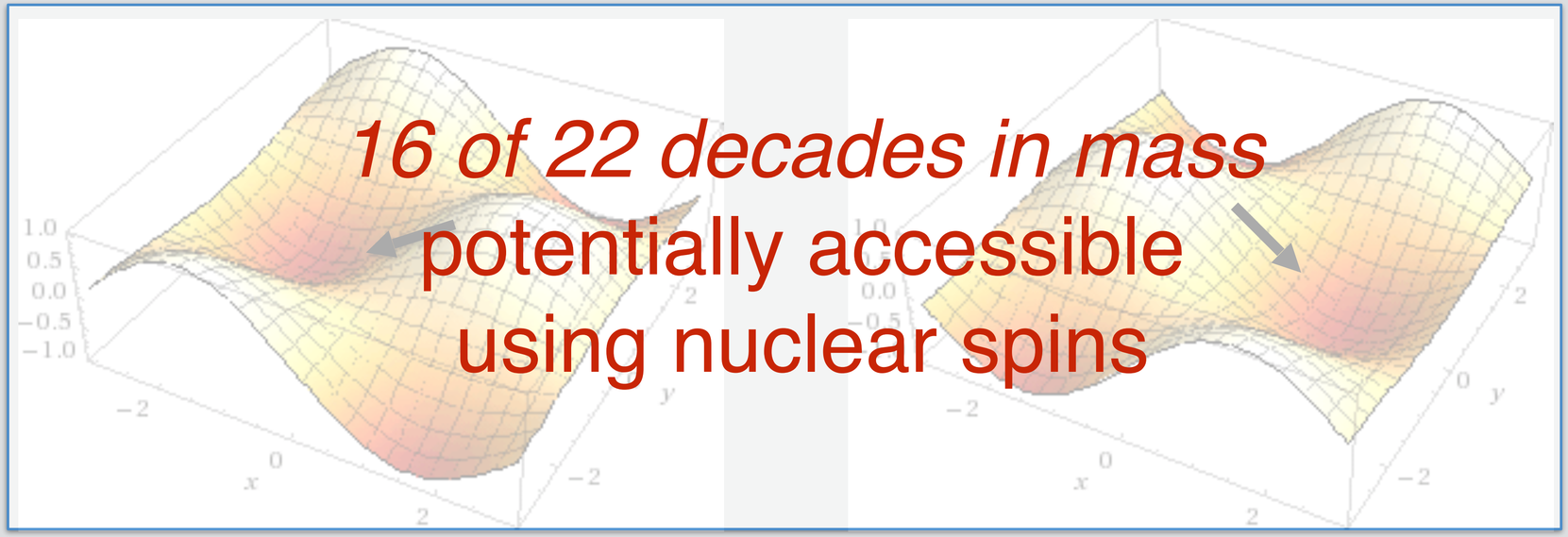

$$H_{\rm ax} \sim 10^{-25}\ {\rm eV} \left(\frac{g_{a\bar{\psi}\psi}}{10^{-10}\ {\rm GeV}^{-1}}\right)\left(\frac{v}{10^{-3}}\right)\left(\sqrt{\frac{\rho_{\rm DM}}{(0.04\ {\rm eV})^4}}\right)\cos m_{\rm a} t$$

Comagnetometry

DM limits

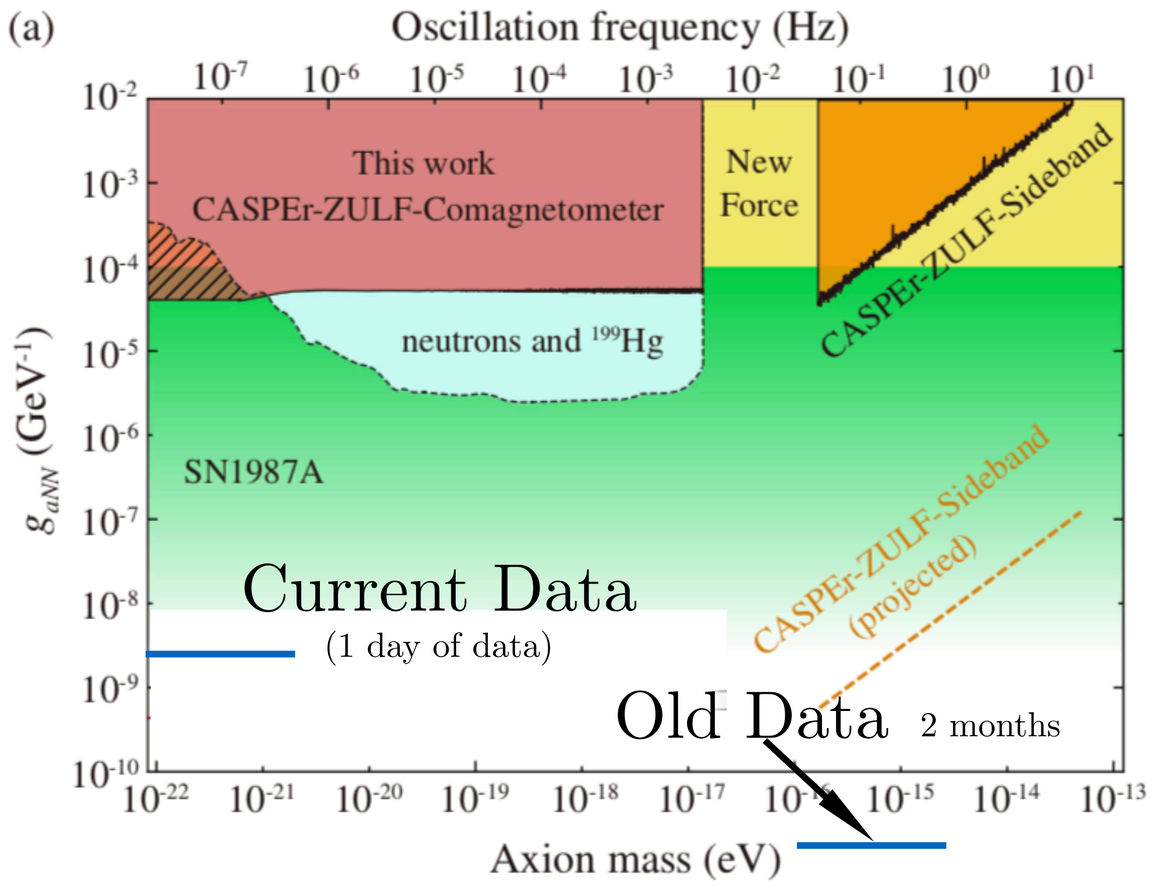

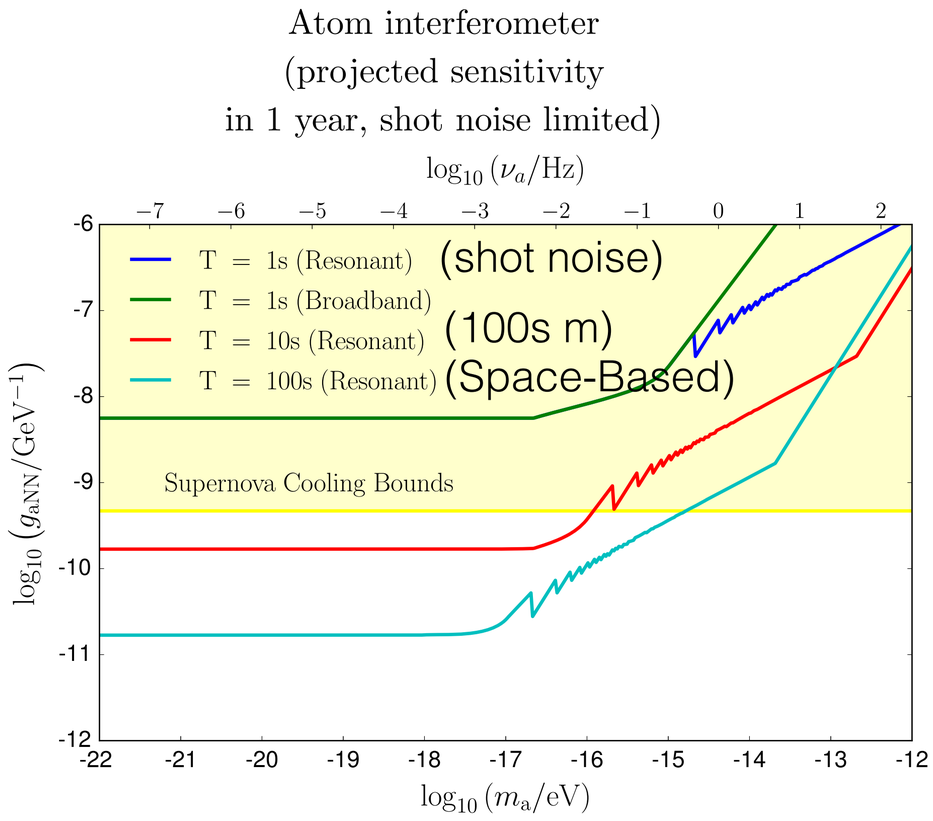

Rb-interaction free system

SQUID readout (more expensive, more complicated)

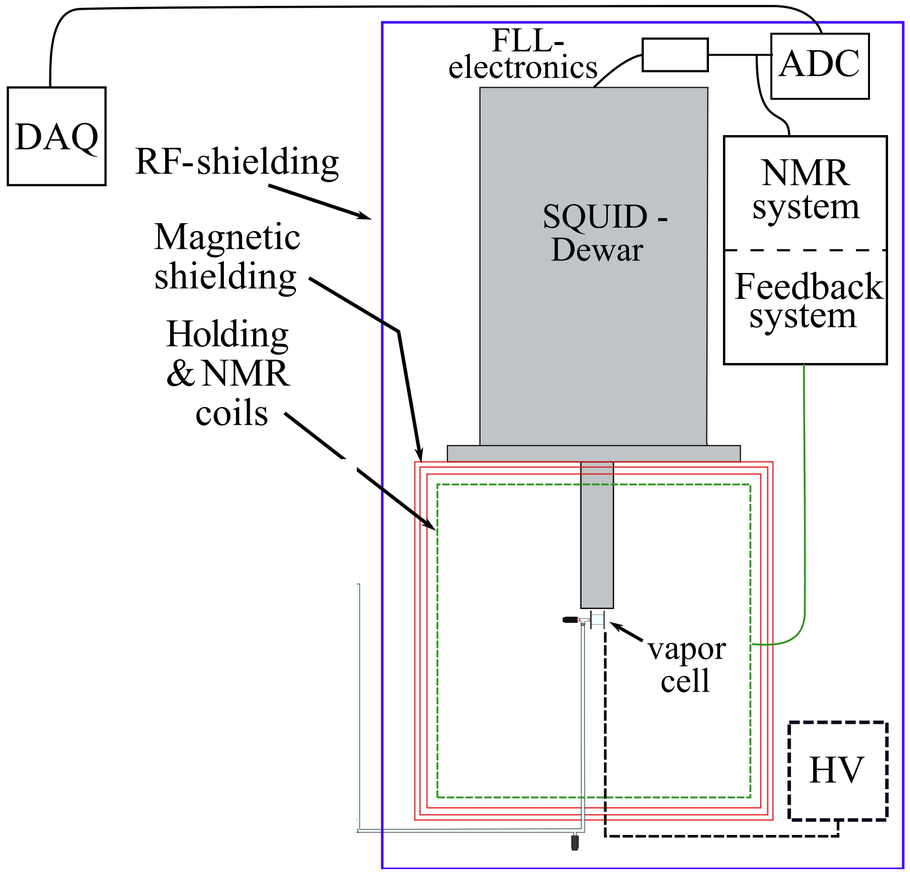

- Must control nuclear self-interactions (collisional and geometric couplings)
    - Controlled cell geometry
    - Decouple self-interaction Hamiltonian
    - Precise quantum state initialization
- Maintain or monitor magnetic field direction (Earths rotation effect)

Potential for Ultra-light Axion search

Reach F_{DM}

Astro-physics $10^9\,\mathrm{GeV}$

Current Data $2 \cdot 10^{10}\,\mathrm{GeV}$

Commercial Gear $1.2 \cdot 10^{12}\,\mathrm{GeV}$

Commercial Gear

Density: 1 amagat

Polarization: 50%

Cell size: 3 x 3.285 cm

SQUID noise: 1 fT

SQUID distance: 2.5 cm

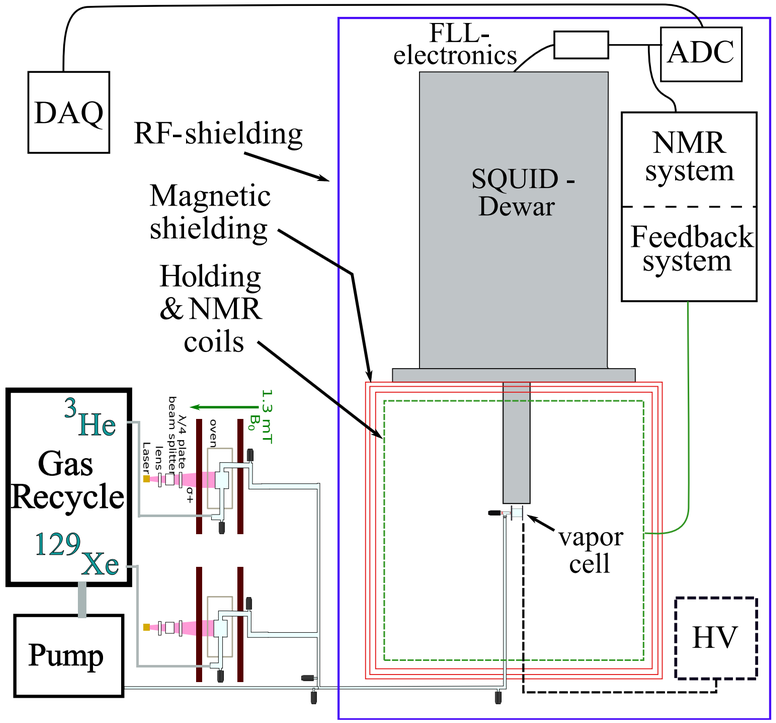

Towards GUT scale

	Reach F_{DM}
Astro-physics	10^9 GeV
He-Ne Goal	$2 \cdot 10^{10}$ GeV
1st Gen	$1.2 \cdot 10^{12}$ GeV
2nd Gen	$3 \cdot 10^{14}$ GeV
Beyond	10^{15} GeV+

2nd Gen

T2 5hrs: Xenon-dimer

50% polarization, SQUID to 200 aT (5cm cell)

Beyond

Decay time T2 limited by Xenon-dimers

— Run hotter (T2 x10?) or

— Higher pressure (x20) or

— decoupling procedures

SQUID noise limited by pickup-loop inductance:

— Custom SQUID coil (x7) &

— Better coupling (x5)

Big hammer:

— 50 cm cell (x30), gradients at nEDM levels, low magnetic field noise needed

Further Impact of High-Performance Comagnetometer

With pHz or better energy resolution

- Xenon - EDM measurement in the $10^{-32}\mathrm{e} - \mathrm{cm}$ range? Systematics dependent
- Along with compact spin-sources: search for Goldstone bosons (pseudoscalars) beyond stellar cooling limits
- Using Neon (quadrupolar nucleus): Best measurements of Lorentz symmetry in E&M

Role of DOE and HEP in improving measurements

Technical and Material Advances

- Some technical improvements more suitable to national lab/staff scientist roles than graduate student or post-doc:
  - long time scales and incremental progress
  - need to preserve knowledge
  - need to share technical advances with multiple groups

1. super High-Q silica: helps any mechanical system
2. low noise surfaces: helps all short-range gravity test
3. low magnetic noise materials: helps room-temperature magnetometer readout
4. Quantum-limited DC SQUID: comagnetometry and low-frequency axion-photon

Vibrations

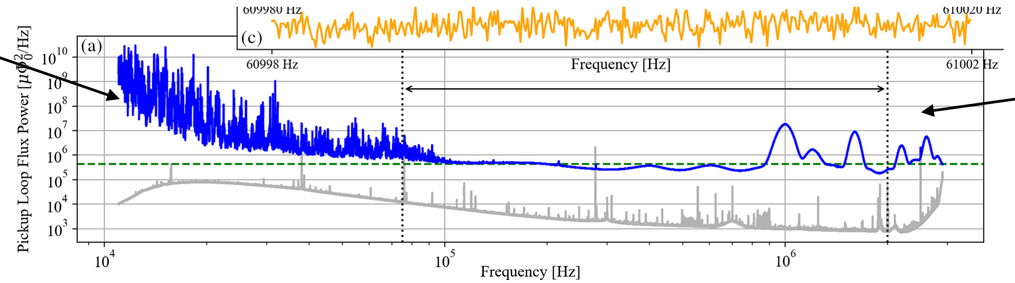

SQUID noise

Vibrations

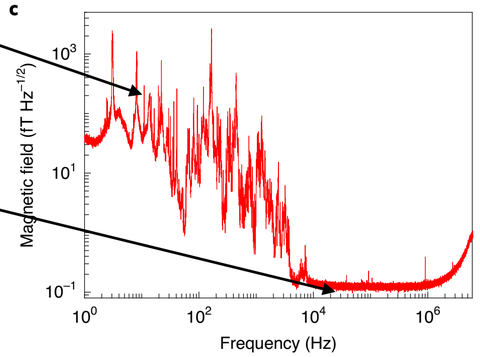

Role of DOE and HEP in improving measurements

Ultra-Stable (underground) National Facility

- High-stability, low noise national facility O(200m deep):
  - along the lines of the low background facilities like Sanford
  - many experiments are limited by vibrations (ABRACADRABRA type, self-compensating comagnetometers, tests of gravity)
  - thermal systematics are pernicious (10x lower underground — w/o stabilization)
  - gravitational gradient noise difficult to handle
  - low-frequency magnetic field variations (mHz-microHz)?

vibrations 100x better

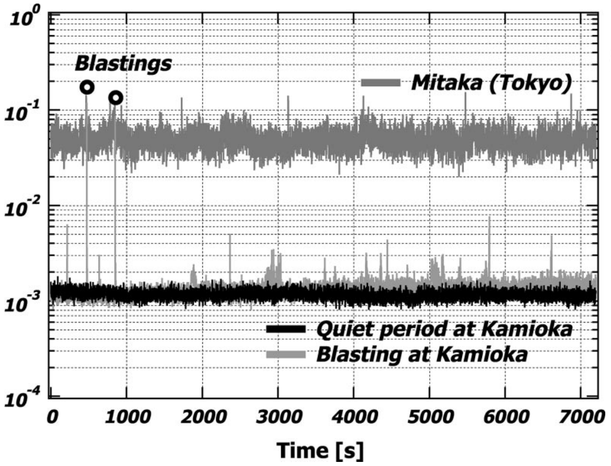

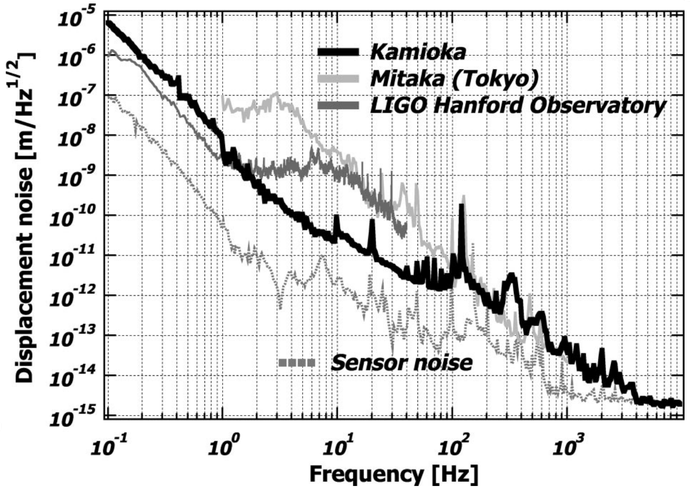

Gravity Gradients Suppressed

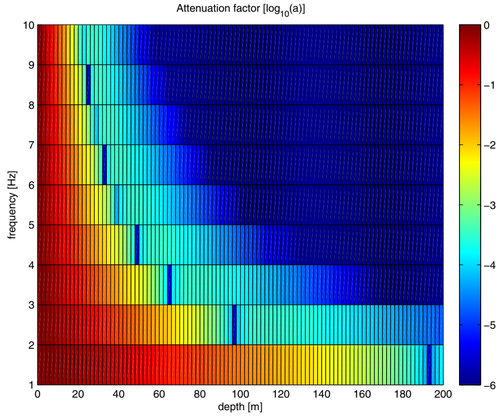

Temp changes 10x lower (w/o stabilization!)