OMEGA timing chips

Christophe de LA TAILLE

19 march 2021

Organization for Micro-Electronics desiGn and Applications

SiPM readout : PETIROC2A

- PET readout
  - 1 GHz preamp and discriminator (SiGe 350nm)
  - 90 ps SPTR (FWHM) measured (40 ps rms)
  - Also used for CMS muons RPC readout

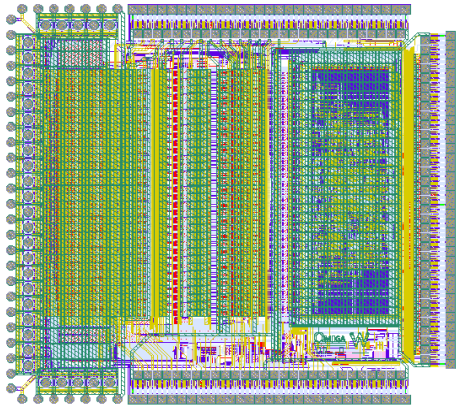

weeroc

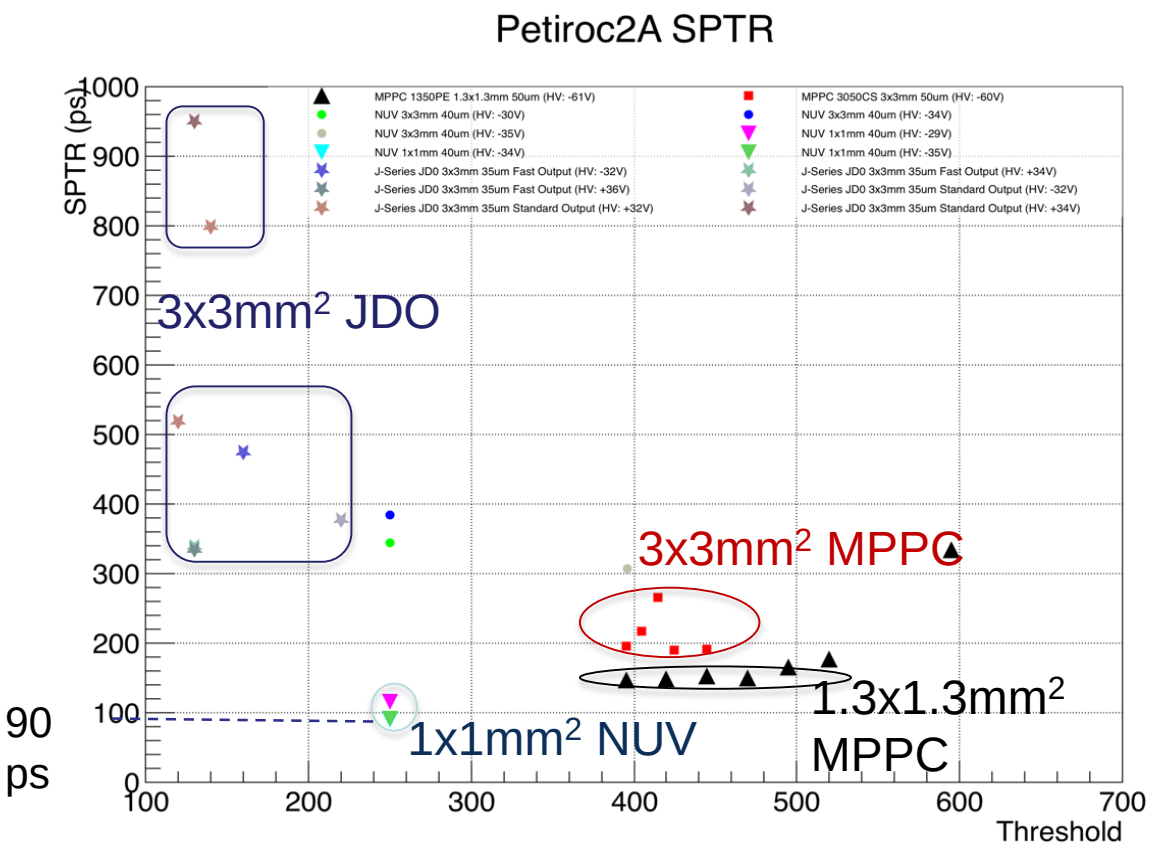

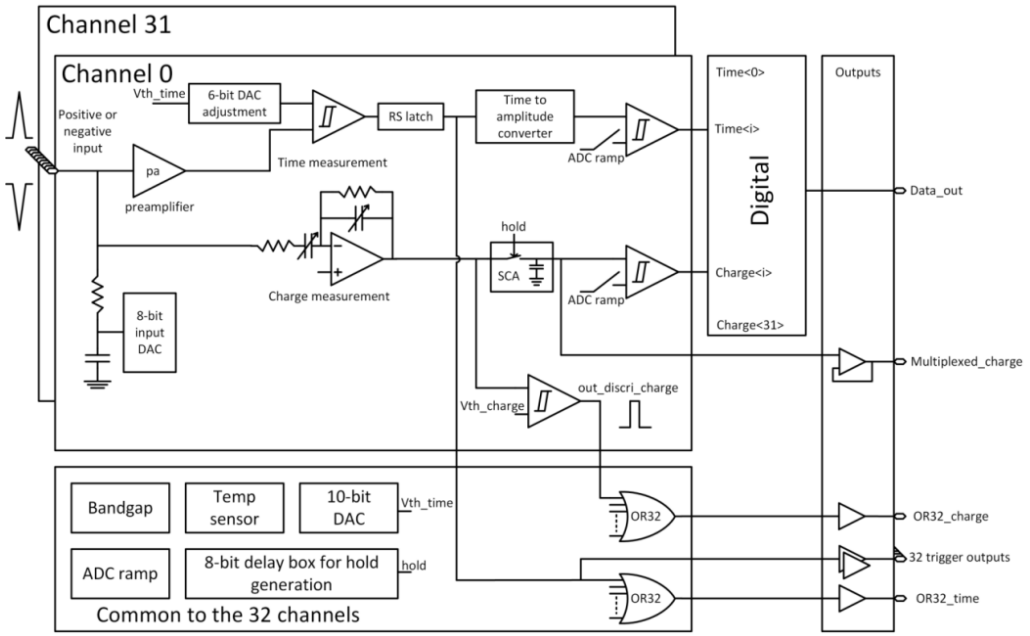

LGAD readout : ALTIROC

- LGAD readout for ATLAS HGTD 1.3x1.3 mm² LGAD
  - ALTIROC1 (2018) 5x5 readout : PA+TDC+RAM
  - ALTIROC2 (foreseen 2021) 15x15 = final size
  - TSMC 130n
- Variant under study for EIC roman pots

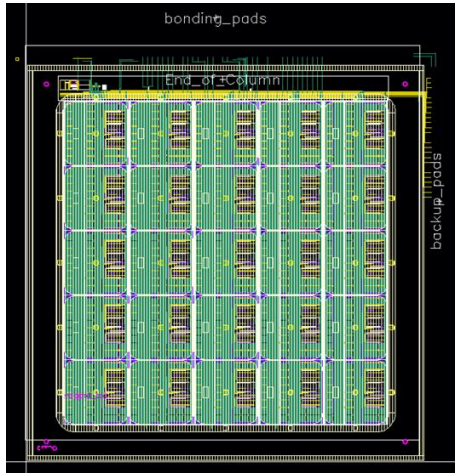

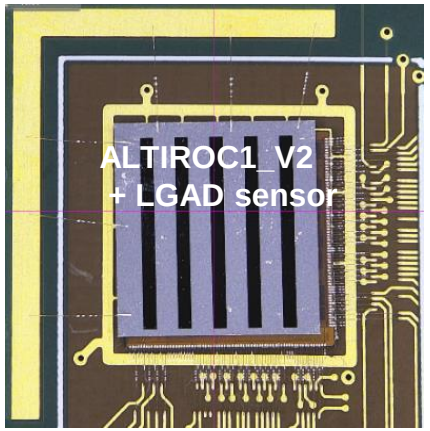

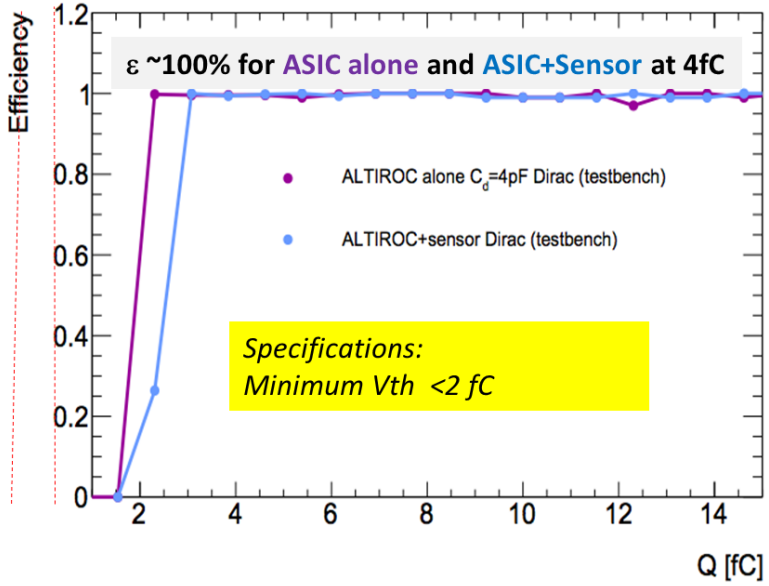

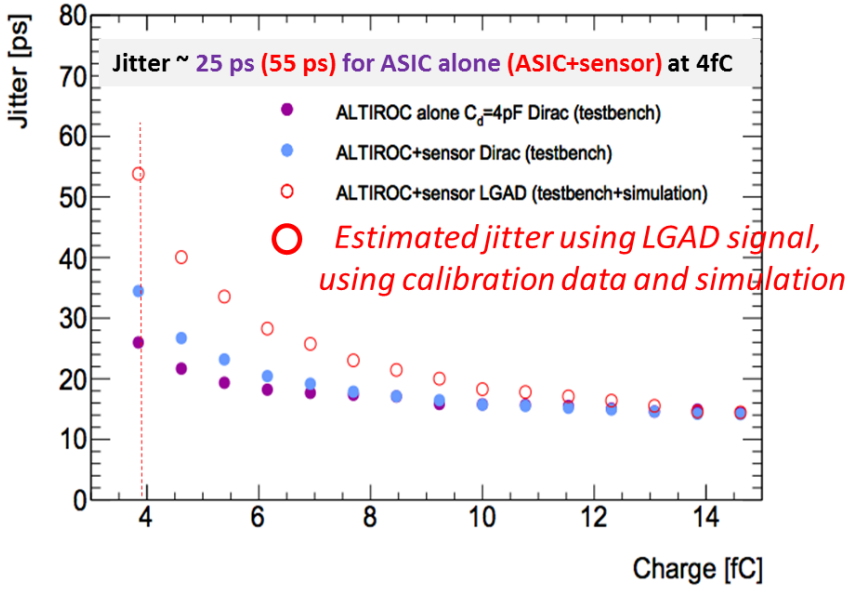

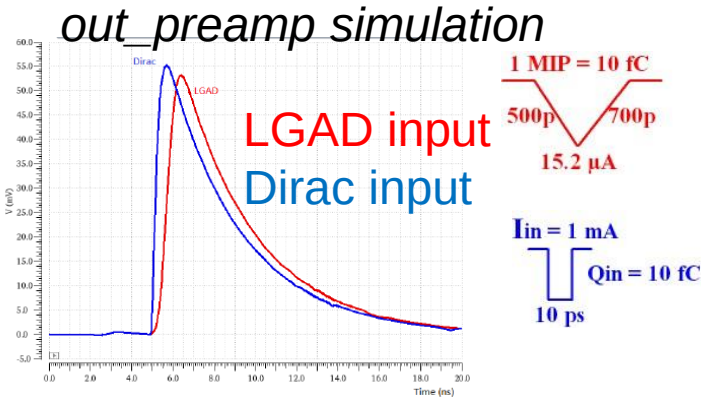

Si readout : HGCROC
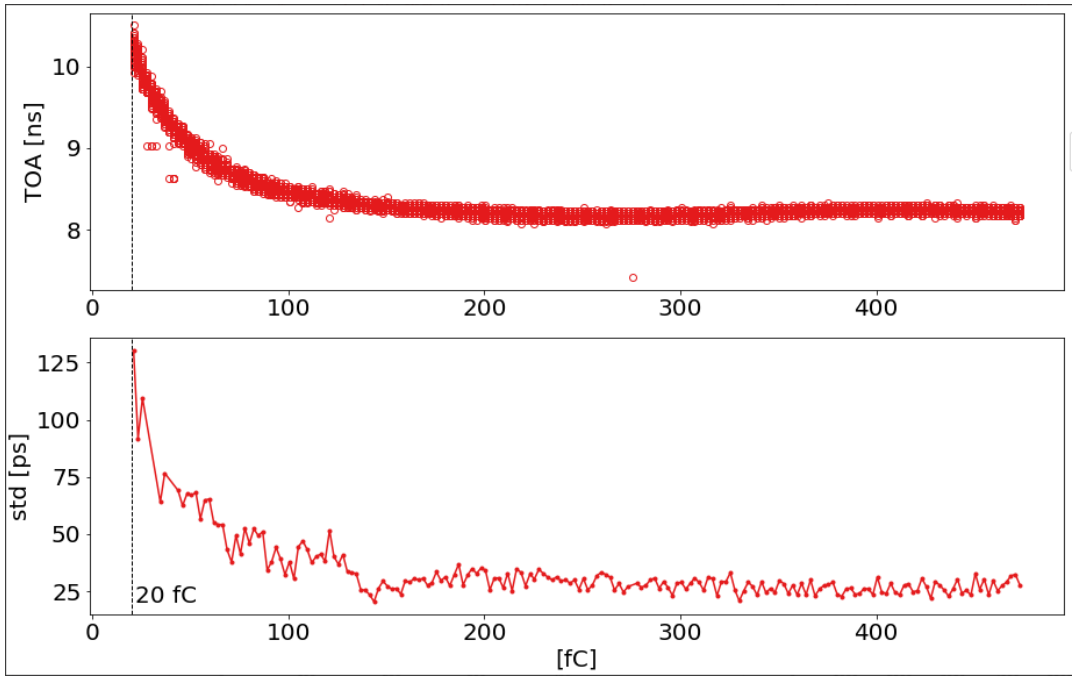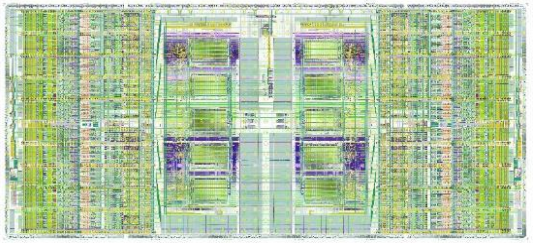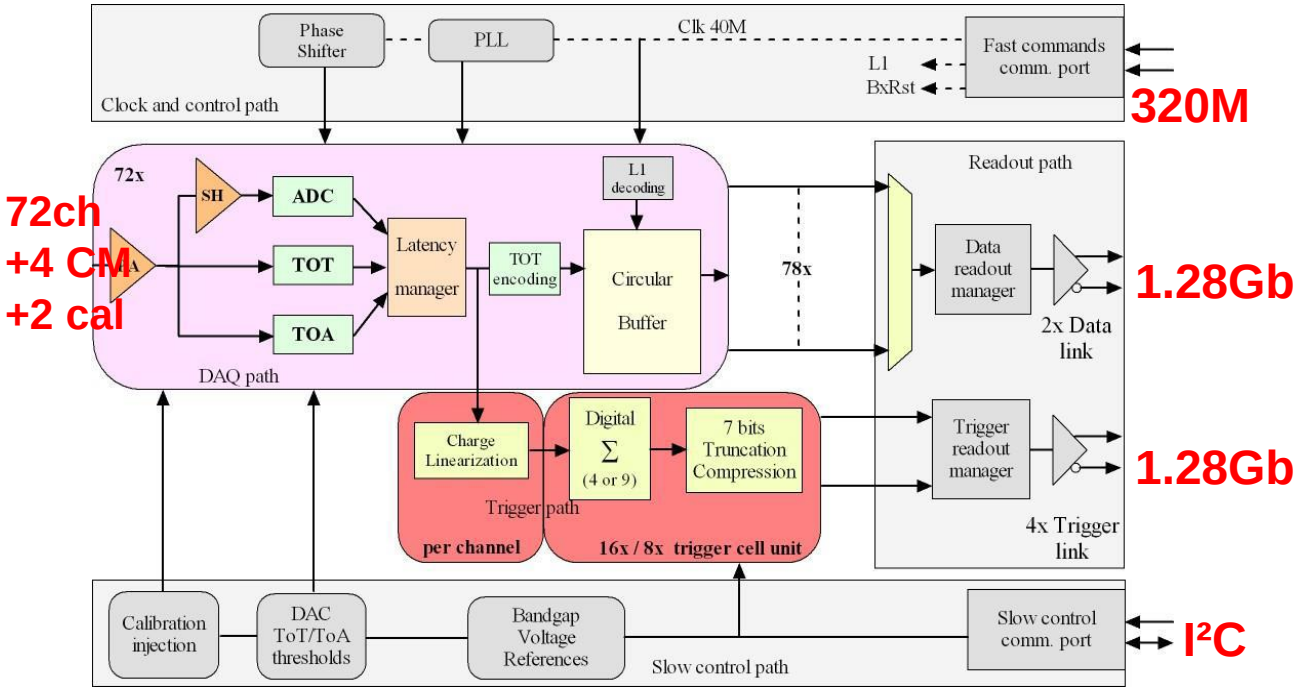
- CMS HGCAL readout ~1 cm² Si pads (50 pF)
  - 72 channels calorimeter/timing readout
  - Also an SiPM variant