Lift Plan Permit

This form has three sections used to document the lift plan required for all *critical, planned engineered and pre-engineered lifts*. Deviations from the approved plan must be reviewed by the original approvers. A copy of the plan must be kept at FESS Crane Office.

If the lift is covered by an existing procedure, attach it to the form and fill out only first page.

Approved plans may be reused for similar lifts of like material. The location, time, and workers may be different. Plans must be signed only once: by preparers and approvers when being written and approved and by workers after reading the plan. Plans must be revised and reapproved if conditions change.

Section 1: Plan Details **Work Order/ Project Number/ Permit Number:** _____

1	**Plan Preparer:**	Dave Pushka 12/03/2020	**Location of Lift:** Mu2e
2	**Description of Object to be Lifted:**	Receive HRS from Delivery Truck	
3	**Type of Lift:** *Check all that apply*	☐ **Critical** ☐ **Planned Engineered** ☐ **Pre-Engineered**	☐ Close tolerance installation ☐ Near electrical, ground or overhead utilities ☐ Unique size, shape ☒ Two or more cranes/forklifts required ☐ Possible impact to operations ☐ Load being lifted over/near critical item ☐ Non-routine/difficult rigging arrangement ☐ Load out of view of the crane operator ☐ Load > 75% of load chart capacity (for steel erection w/ mobile crane)
4	**Hoisting Equipment Manufacturer & Type:**	Model Number: Type: Crane# CR270CR01 TYPE: TOP RUNNER DOUBLE GIRDER BRIDGE CRANE (TR/DG/MD) SERIAL# 18384-1 Annual inspection date: 02/04/2020 Crane# CR270CR02 TYPE: TOP RUNNER DOUBLE GIRDER BRIDGE CRANE (TR/DG/MD) SERIAL# 18384-2 Annual inspection date: 02/04/2020 Both cranes are in good standing and with active status	Rated Capacity: two tandem cranes at 30 tons each Inspection Date _2__/_04___/_2020____

Sections 5, 6, 7, 8, 9 and 10 are to be filled out when a mobile crane is used.

~~5~~	~~**A. Expected Radius:**~~	~~(Maximum Radius pick, swing, set)~~	~~(Planned Radius)~~
	~~**B. Load Rating at Radius:**~~	~~(Maximum Radius)~~	~~(Planned Radius)~~
	~~**C. Swing Direction and Degrees of Swing**~~	~~Swing Direction:~~	~~Degrees of Swing:~~
	~~**D. Lift Elevation and Boom Angle**~~	~~Lift Elevation:~~	~~Boom Angle:~~
~~6~~	~~**A. Weight of Rigging:**~~	~~A.~~	~~B.~~
	~~**B. Weight of Load:**~~		
~~7~~	~~**A: Total Load Weight:**~~		
	~~**B: Percent of Rating (for mobile crane):**~~	~~.~~	
~~8~~	~~**Jib or Boom Extension Used (Yes or No)**~~	~~Length/Erected:~~	~~Weight~~
~~9~~	~~**Clearances:**~~ ~~**Load to Boom:**~~		
	~~**To Existing Facilities:**~~		
	~~**To Power Lines:**~~		
	~~**Fall Zone:**~~		
~~10~~	~~**Ground Surface Type:**~~	~~☐ **Bare Ground** ☐ **Asphalt** ☐ **Concrete** ☐ **Other**~~	

Lift Plan Permit

	~~Stability:~~	~~Ground Stable/Support Needed:~~	~~☐ No ☐ Yes – Type: _____~~
~~11~~	~~Anticipated Hazards: (wind, weather, visibility, power lines)~~		~~☐ Wind is < than 25 MPH or lower as specified in JHA.~~ ~~☐ Power Lines > 20 Feet from Maximum Working Radius of Crane (see OSHA 1926.1408)~~ ~~☐ Other _____~~
Attachments Included:			☐ Crane Annual Inspection ☐ ~~Forklift Annual Inspection~~ ☐ Operator Qualifications (Required) ~~☐ Crane Operator Medical Card (Required for mobile cranes)~~ ~~☐ Medical fit-for-duty exam (Required for critical and planned engineered lifts)~~ ☐ Crane Operator Evaluation Form (Mobile cranes only) ☐ ~~Rigger Qualifications (If riggers are used)~~ ☐ Site Plan ☐ ~~Utility locating documentation (e.g. JULIE)~~ ☐ Rigging Configuration (Required) ☐ Hazard Analysis

Notes:

Crane Annual inspection attachment shall be provided by the crane office.

Operator Qualifications shall be provided by the line management for the assigned staff.

Medical fit-for-duty exam for the qualified operator as required by section 3.8 in the chapter is apparently an error according to 12/4/2020 email from Angela Aparicio. It is being ignored in this permit pending posting of the corrected chapter.

Site plan for the loading dock and lower portion of the Mu2e Hall will have to be proposed and provided in conjunction with the Mu2e integration team. As of 12/3/2020, the landing place of the HRS is still being discussed.

Hazard Analysis is being developed in conjunction with the line management for the assigned staff.

Paragraph 5.1 of the December version of FESHM 10200 delegates the individual responsible for the item to determine of the object is handled as a critical, planned engineered lift, pre-production lift or ordinary life. This is an ordinary lift, but with preplanning appropriate for a critical lift.

Lift Plan Permit

Define Rigging Gear Requirements

1. List each piece of rigging gear shown on the rigging sketch or photo in the table below (such as: load hook, shackles, slings, eye bolts). If a component weighs more than 10 pounds, include the weight in the weight column.
2. Label the sketch or photo using the corresponding number for the gear.
3. Draw sling angles and the resulting load reduction factors for slings and eyebolts.
4. Calculate the force on each piece of rigging gear. Show that angles are accounted for in determining forces.
5. Determine the required rigging gear capacity and size. Indicate if this is an exact specification or a minimum.

Item	Name of Rigging Equip: (Sling, Eyebolt, etc.)	Weight	~~Force on gear~~ Load on Component	Capacity / rating / working load limit	Size specifications
1	Shackle at Bell end (end facing the dump)	Estimate at 25#	32,039 #	34 ton (68,000 #) 3	Galvanized Alloy Steel Screw-Pin Shackle - for Lifting, 2" Pin MCM 3663T59
2	Sling at bell end	Estimate 25 #	31,326 #	16,300 # choker 20,400 # Straight 40,800# basket (Use as a basket)	Flat-Eye Web Sling, 4" Wide, 16300 lb. Choker Capacity MCM 9077T4 6 foot length, Polyester Material
3	Shackle at TSU end	Estimate at 25#	32,039 #	34 ton (68,000 #) 3	Galvanized Alloy Steel Screw-Pin Shackle - for Lifting, 2" Pin MCM 3663T59
4	Sling at TSU end	Estimate 25 #	31,326 #	16,300 # choker 20,400 # Straight 40,800# basket (Use as a basket)	Flat-Eye Web Sling, 4" Wide, 16300 lb. Choker Capacity MCM 9077T4 6 foot length, Polyester Material
5	Lifting Beam	From NX: weight = 2477 pounds including the shackles	63,365 # (pounds)	76,241 # (pounds)	F10096019
6	Tag Lines	n/a	250 pounds		
7					
8					

Section 2: Rigging Plan and Sketch

Plan the Rigging *(define specific controls)*

On a sketch or photo (see sketch grid on next page), show how the item will be rigged and the type of gear to be used:

1. Show location of shackles, hoist rings, spreader beams, slings, etc.
2. Show attachment points (how rigging gear will be attached to load)
3. Show where padding of sharp edges are necessary
4. Provide the weight of heavy equipment such as a lifter or spreader beam
5. Show proper orientation of eyebolts
6. Indicate the center of gravity (horizontal and vertical)

Rigging Sketch or Photo of Rigged Item *(Include all information required to determine that the load is properly rigged and that appropriate rigging gear is selected. Include, as applicable, sling angles, eye bolt orientation, padding points, center of gravity, type of sling hitch, and any other pertinent information.) May attach drawings.*

Lift Plan Permit

Scope:

This lift plan is for receiving the HRS from the delivery truck (backed into the upper level of the Mu2e building) and lowering the HRS onto the installation tooling at the lower level.

Discussion:

The HRS should be orientated on the truck so that the bell end is facing the rear of the truck. Contract with HRS fabricator has this requirement in it.

The lifting beam shown in this plan is to be delivered with the HRS. It will be load tested at the vendor's facility prior to shipping. Engineering note to be completed and signed off after load test but prior to shipment.

The frame (shown in blue in the below images) used to deliver the HRS will be used as part of the installation tooling.

The lifting beam cannot be sized to lift both the HRS and the shipping frame at the same time due to limitations on the lifting beam size (it must fit into the HRS bore).

Intent is to use both cranes positioned so that the sling angles are vertical and no reduction in capacity needed.

New shackles and slings were ordered (12/3/2020) from McMaster Carr for this task under AD requisition number 38963 and FNAL requisition number 314724 so that the requirements of this chapter could be met by explicitly identifying the hardware.

HRS Center of Gravity Location is approximately 80 inches from the end plate (where the red blue and green triad is shown in the cut away below). It is very close (within ½ inch) to the vessel long axis centerline:

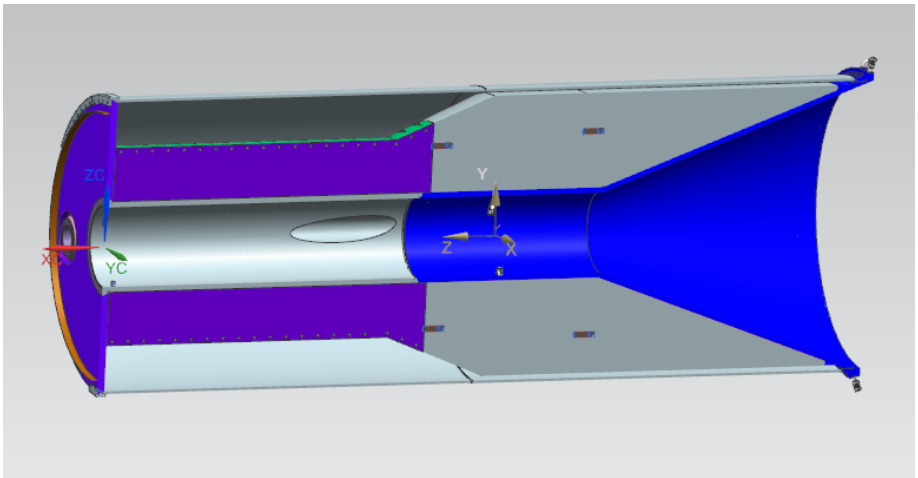

Nominal dimensions of the HRS are 151 inches long, 59 inches in diameter, and weighs approximately 63,400 pounds (31.6 tons).

The shipping frame weighs approximately 7200 pounds with all shipping restraints installed.

This lifting permit was drafted prior to the release of FESHM 10200 and updated after the chapter release.

Section 2: Rigging Plan and Sketch, continued

Rigging Sketch or Photo of Rigged Item *(Include all information required to determine that the load is properly rigged, and that appropriate rigging gear is selected. Include, as applicable, sling angles, eye bolt orientation, padding points, center of gravity, type of sling hitch, and any other pertinent information.)*

Step 0, HRS as shipped:

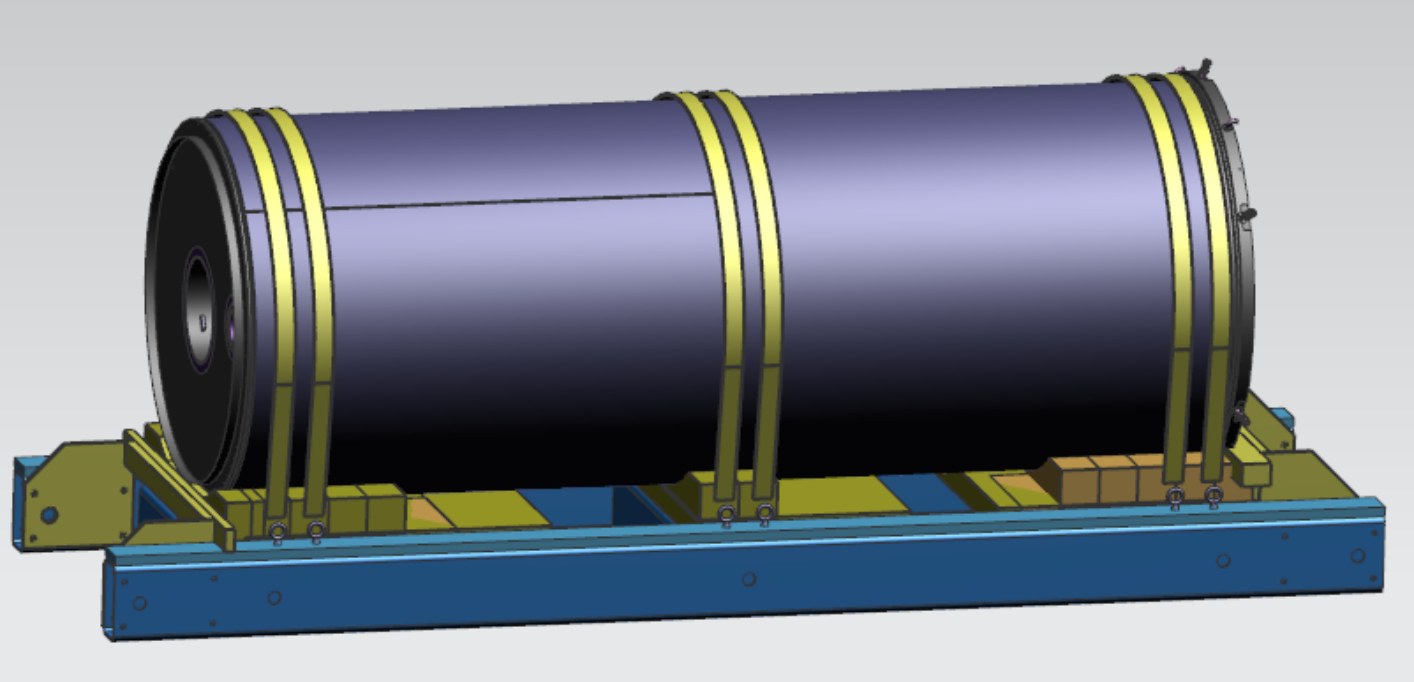

Note, there are water and vacuum ports on the bell end of the HRS (shown on the righthand side in the above image). The cribbing is designed to prevent these ports from being damaged.

Vessel is supposed to be loaded on the shipping frame in the orientation shown above, so that the clocking is correct. If it isn't the clocking will be taken care of during the installation in the HRS into the PS.

The HRS is assumed to be dirty from fabrication and shipping and will be manually cleaned after placement on the installation fixture. Any plastic or plywood covers should be removed prior to performing this lift plan.

Step 1, insert lifting beam into the HRS from the back of the truck. Note the lifting beam included HDPE pads so it can slide inside the HRS bore during this process.

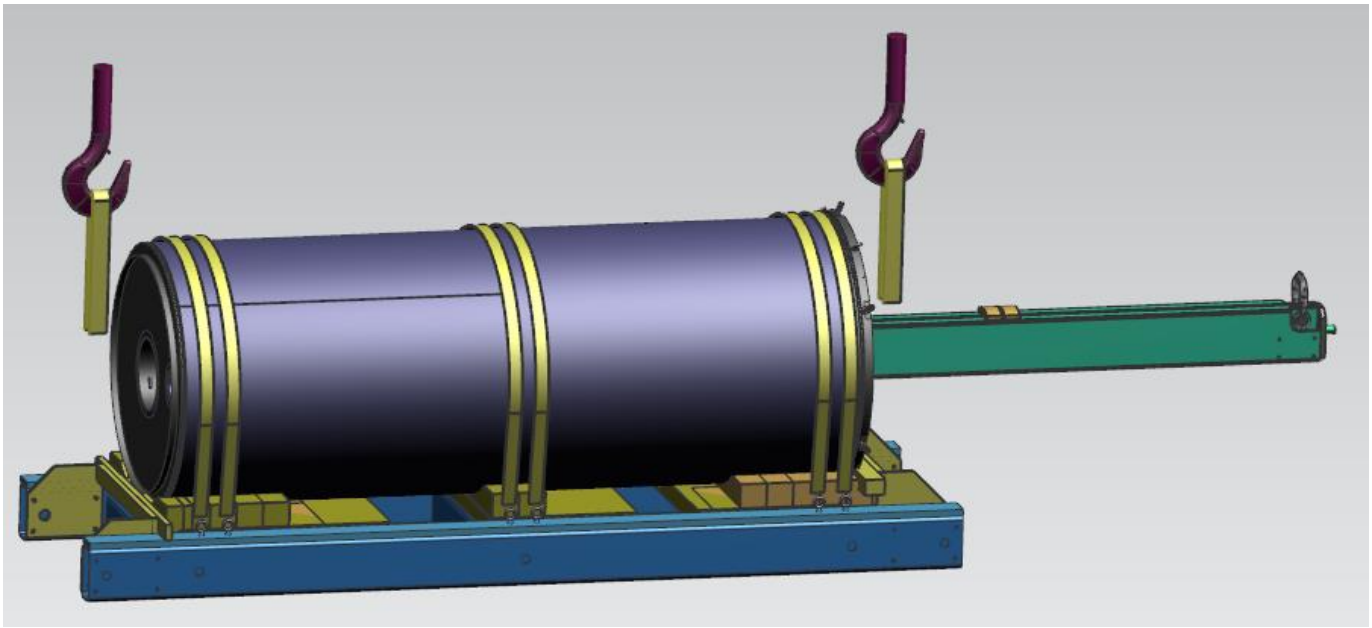

Note: Two groups of three tabs are in bore of the HRS and beam insertion must be performed so as not to touch these carefully located tabs (the set of three in the middle of the vessel are for mounting the target, the set near the TSU end are for mounting the pbar absorber).

A tag line will be inserted thru the bore of the HRS, connected to the left-hand end of the lifting beam, and used to pull the lifting beam thru the HRS while the crane supports the lifting beam weight with a sling choked about the lifting beam center.

Once the lifting beam is approximate 45% inserted, rest the free end (the right-hand side shown above) on cribbing (not shown), then lower the crane to unload the center. Move the crane hook to the shackle shown on the right and lift the free end of the beam to take the weight.

At this point, the tag line will need to pull the beam thru the bore. Coefficient of friction of HDPE on steel is about 0.2, therefore the tag line will need to pull with about 250# of force to overcome the static friction.

The clearance between the upper target tab and the beam is shown here:

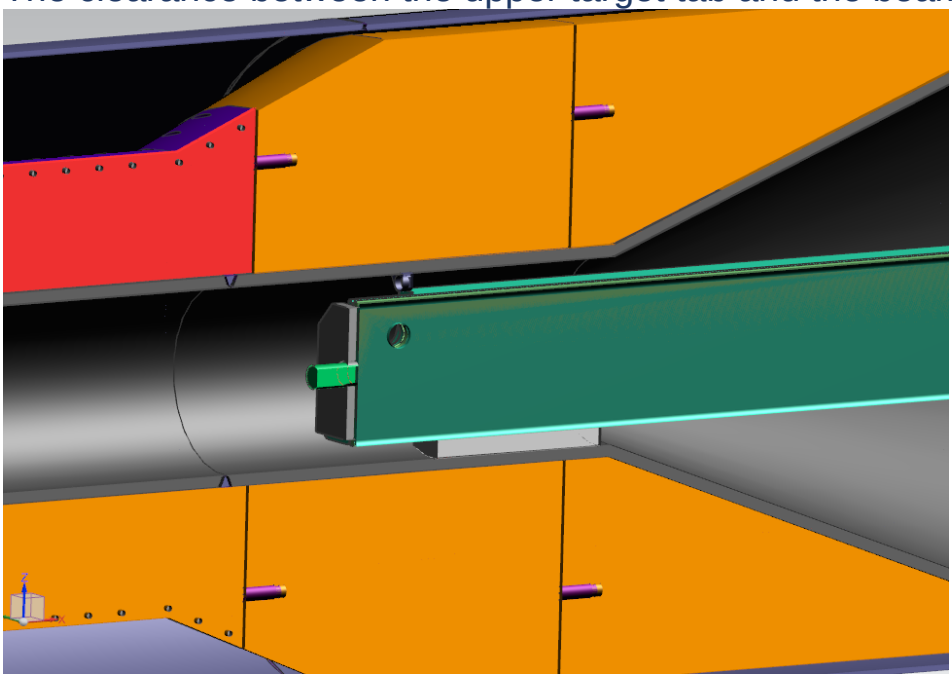

Lifting beam slides along inner bore of the HRS on a HDPE pad provided with the lifting beam.

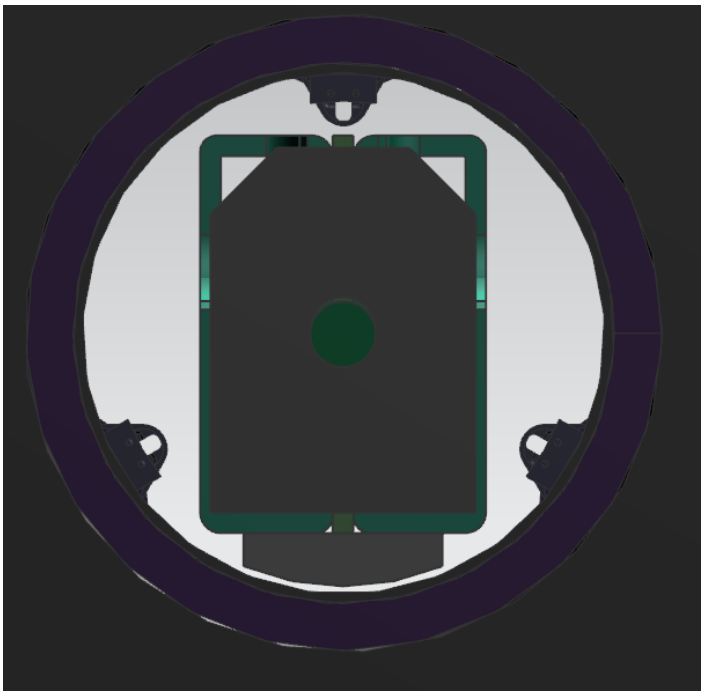

Step 2, Remove Shipping constraints. Lifting beam inserted and ready to lift:

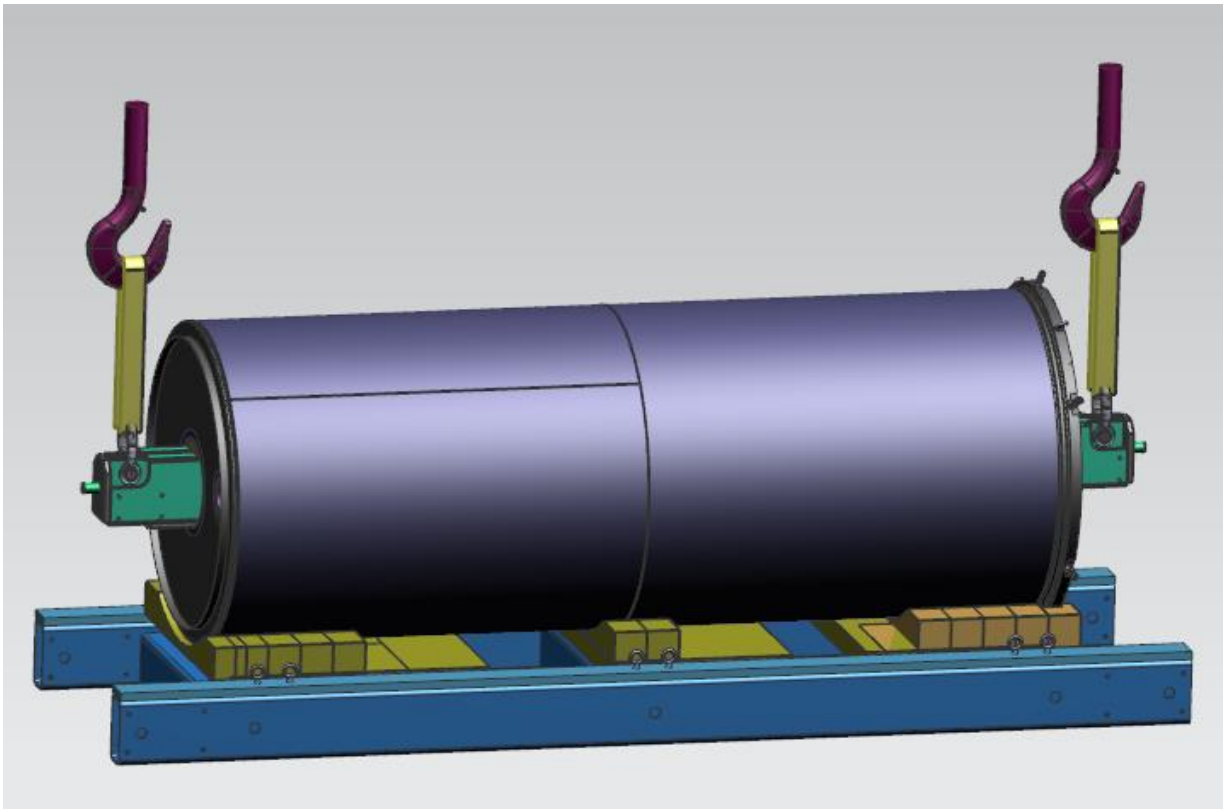

Step 3, shipping constraints removed, vessel lifted off shipping frame:

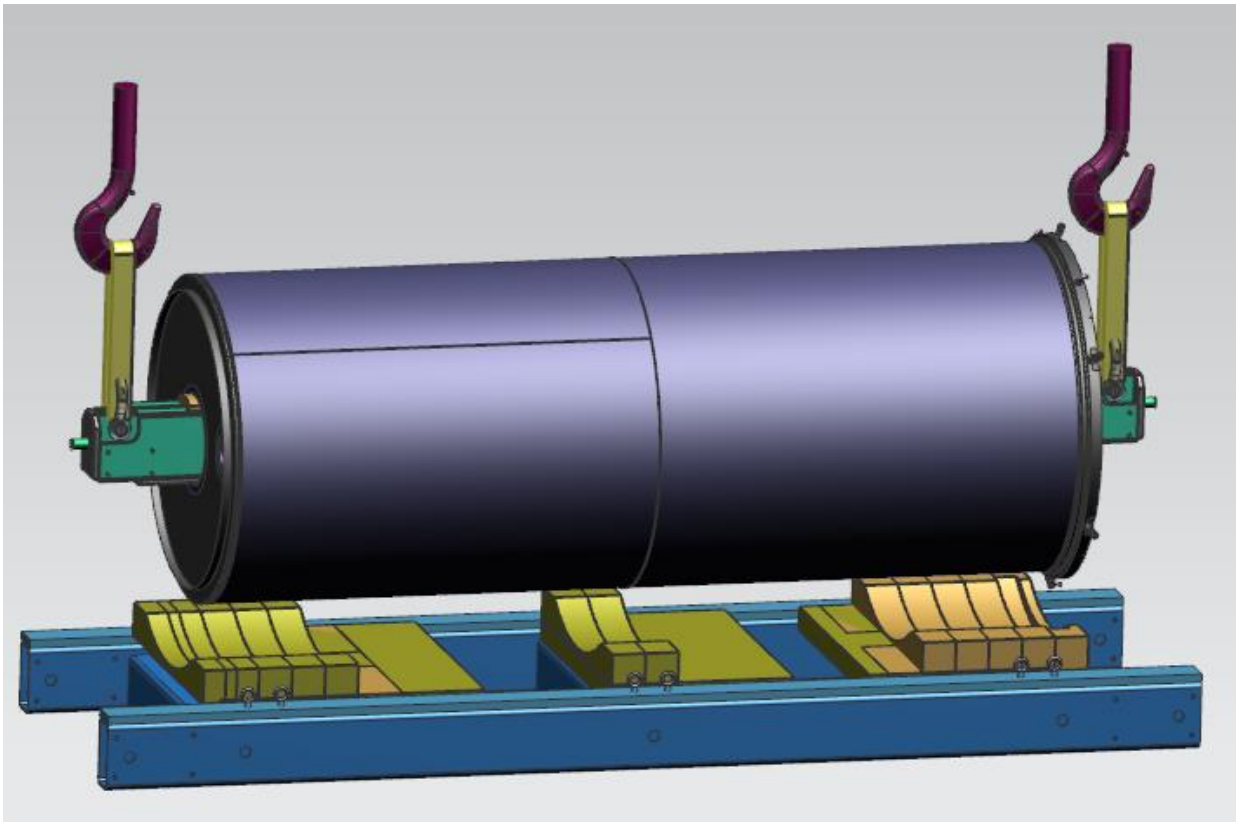

Note: Rotation of the HRS about the long centerline due to the beam pipe induced asymmetry has been looked at and should not occur. The friction between the pads on the lifting beam and the HRS inner bore exceeds the rotational moment due to this asymmetry.

Step 4, shipping constraints removed, vessel lifted off shipping frame and moved laterally off the truck.

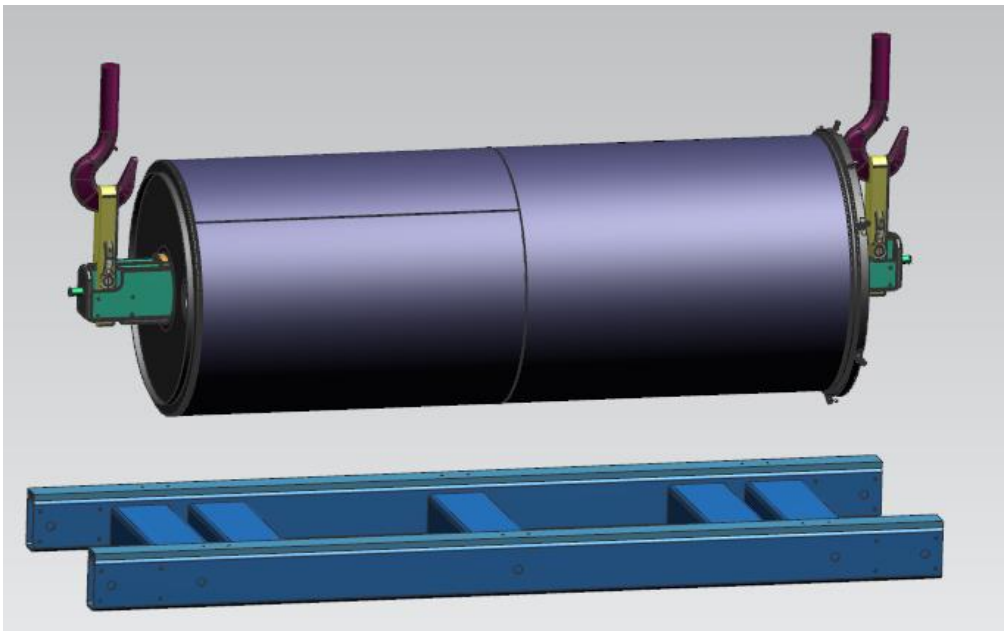

Step 5, Cribbing supports removed from the shipping frame and repositioned on the floor adjacent to the truck. HRS landed on cribbing supports:

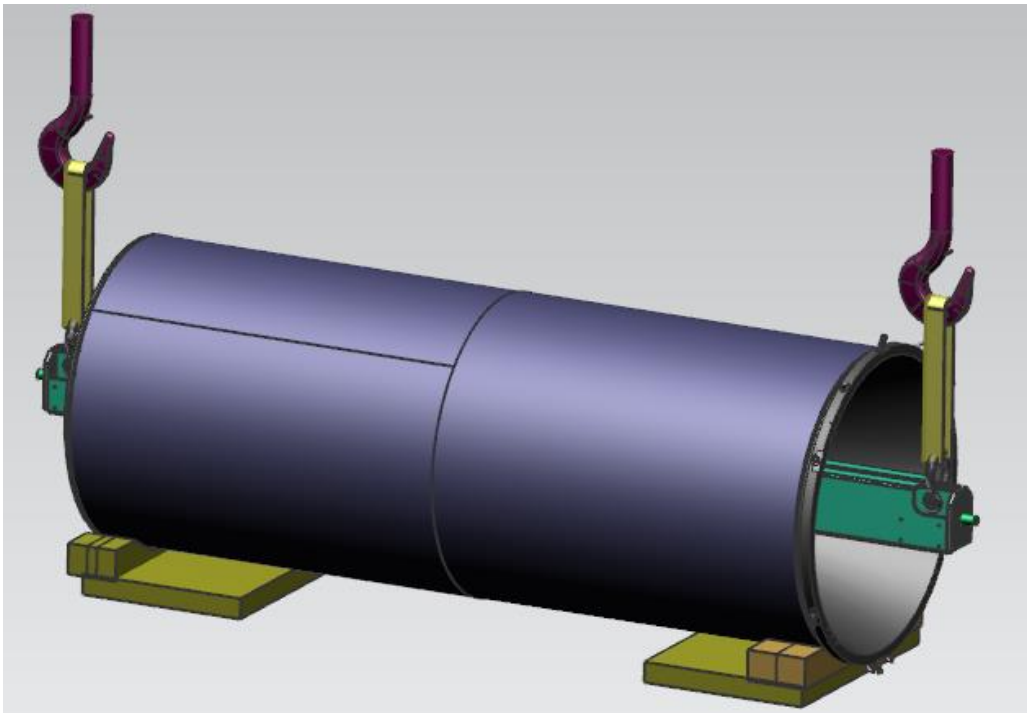

Note the elevated cribbing to protect the vacuum and water ports on the bell end of the HRS.

Step 6, Shipping frame removed from truck and positioned onto the installation frame at the lower level:

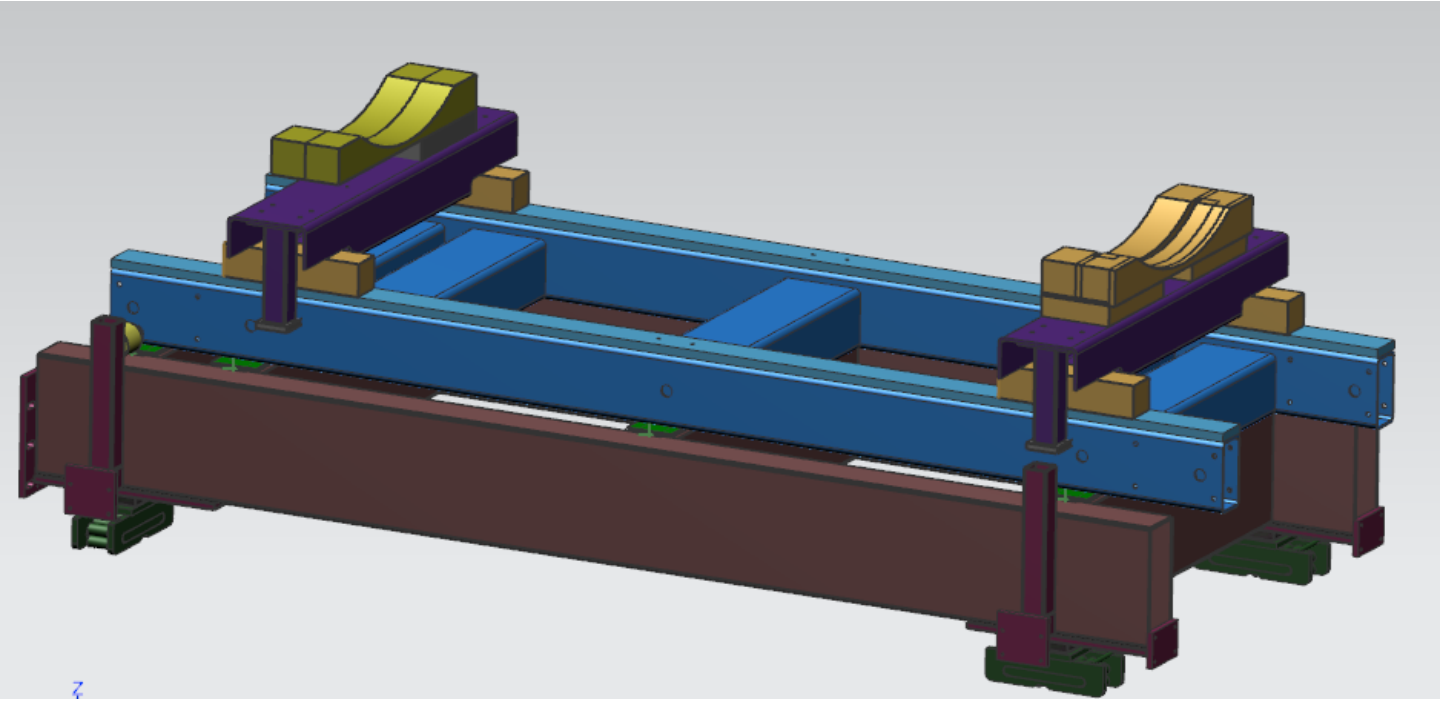

Step 7, Once the shipping frame is off the truck, the truck can be released, and the receipt is complete.

Step 8, Re-inspect slings, Lift HRS from the cribbing at the upper level, translate to the location of the installation assembly, and lower onto the installation assembly.

(note, image below has slightly out of date images of the carriages (shown in violet)).

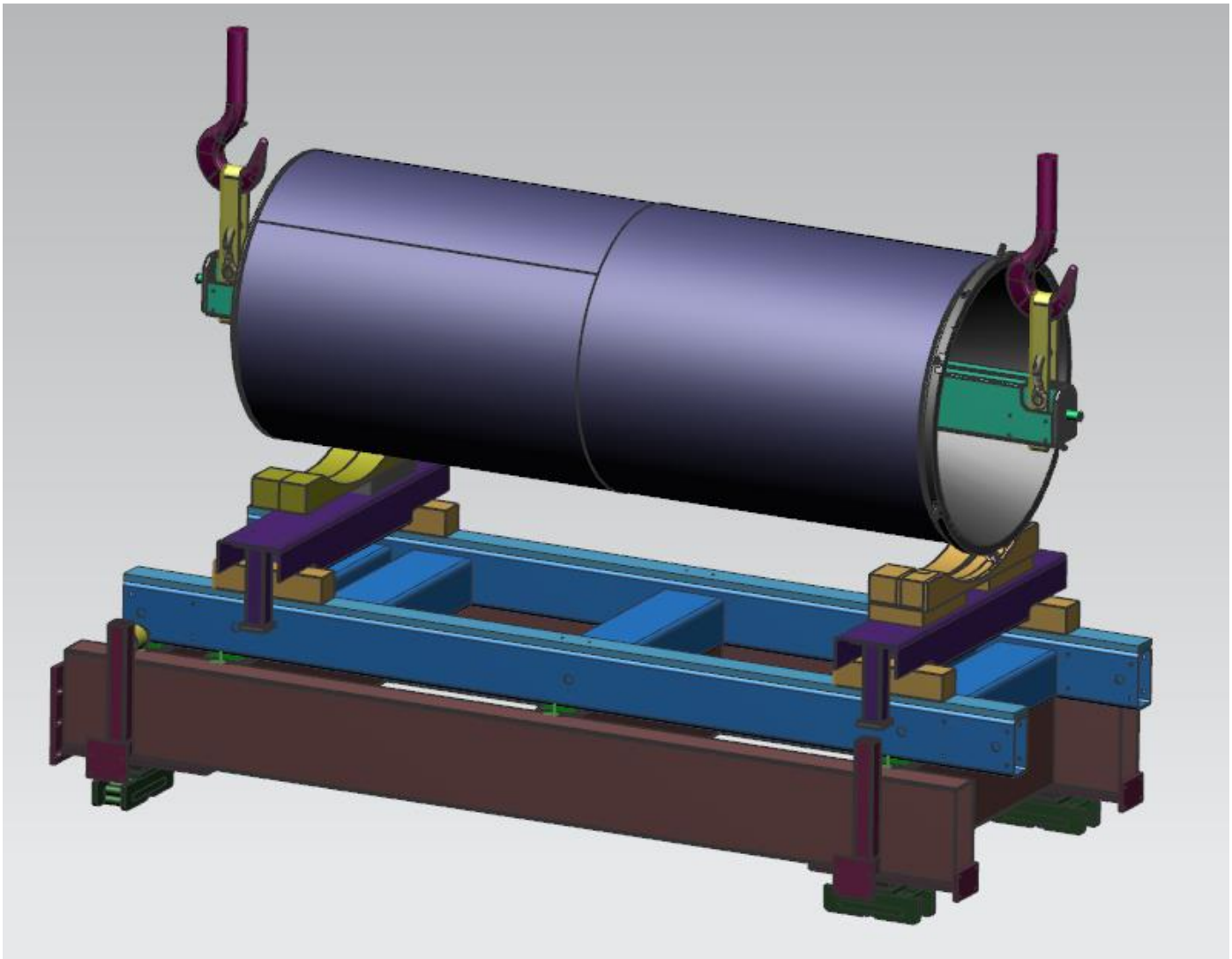

Step 9, Completed HRS Receipt:

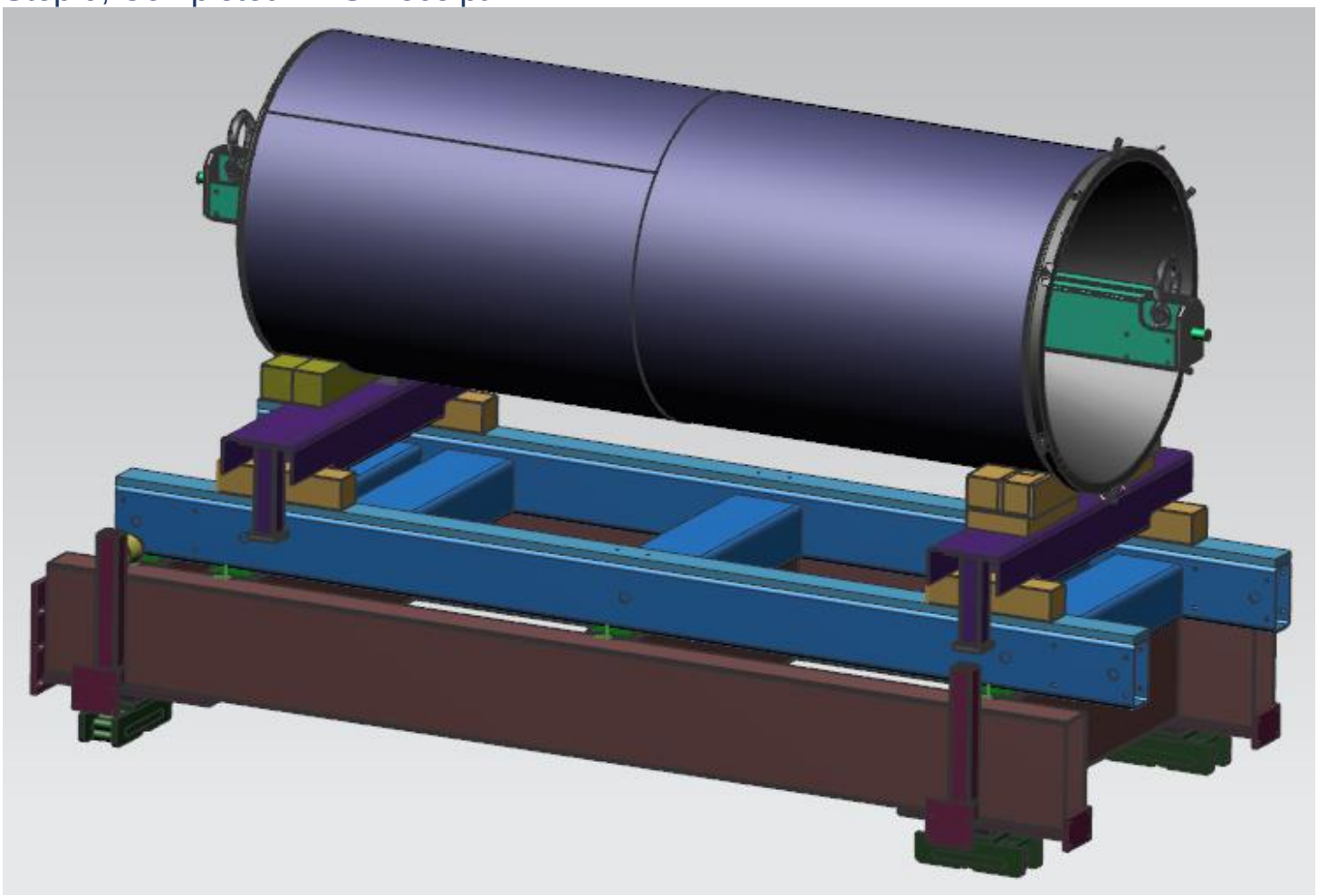

When moving the loaded installation machine assembly, re-install two shipping straps to secure HRS to the shipping frame:

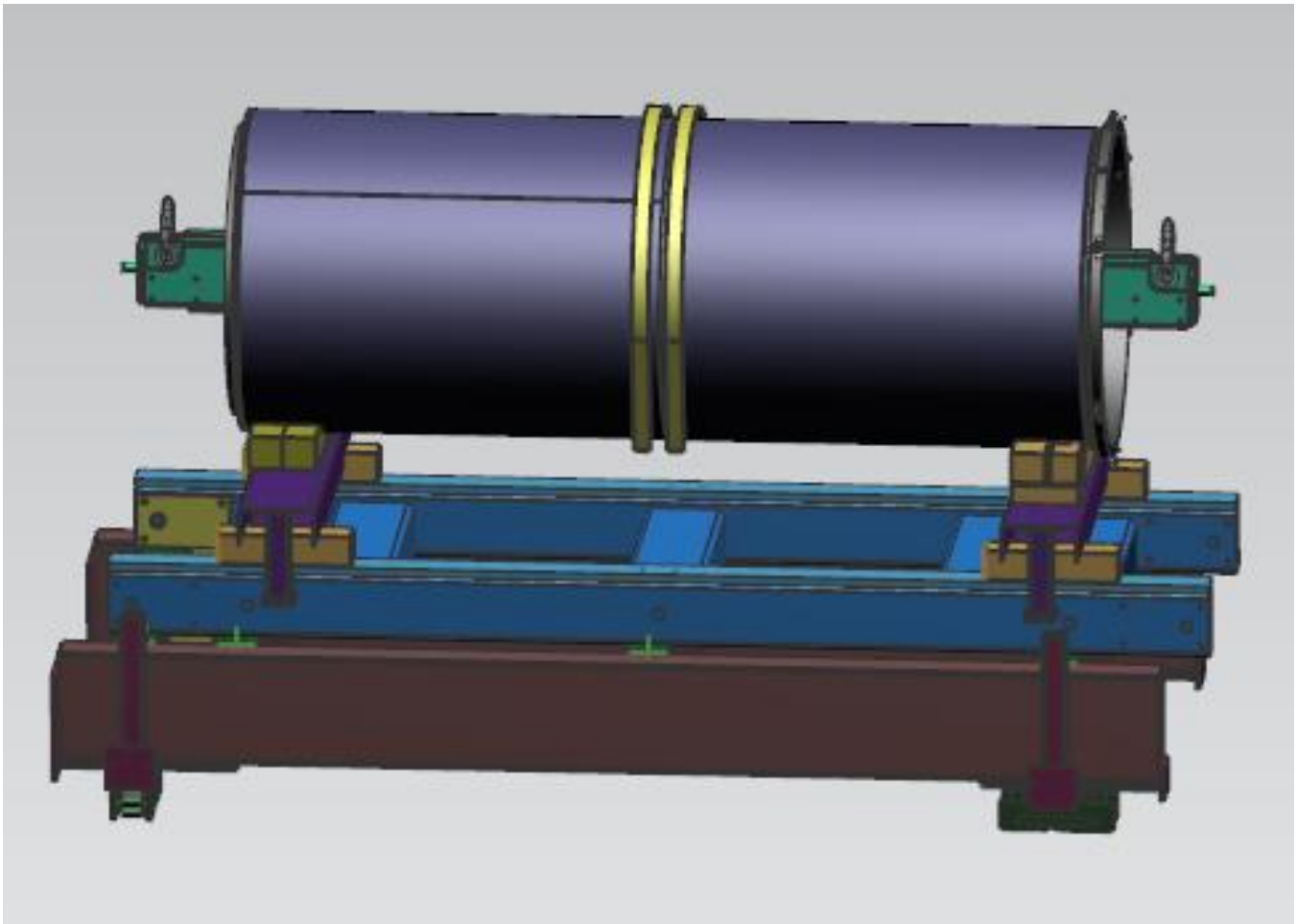

Note:

Storage location of the HRS inside the Mu2e building is not defined in the scope of this lifting plan. Identifying the best storage location is the responsibility of the integration team and floor manager.

However, storing the assembly shown above (HRS and installation machine) in the area where the TSU ultimately resides is proposed to avoid interference with the extinction monitor installation.

Lift Plan Permit

Lift Director		
Printed Name:	Signature:	Date:
Technical Approver (Crane Office SME), or designee		
Printed Name:	Signature:	Date: 12/7/2020
~~**Contractor Supervisor (if applicable)**~~		
~~Printed Name:~~	~~Signature:~~	~~Date:~~
Qualified Crane/~~Forklift Operator~~		
Printed Name:	Signature:	Date:
ES&H Representative		
Printed Name:	Signature:	Date:
D/S/P Head (or designee)		
Printed Name:	Signature:	Date:

Person-in-Charge (If the Lift Director cannot be present, they may designate a person-in-charge (PIC), who must be someone other than the operator.)		
Printed Name:	Signature:	Date:
Authorized Workers *(The Lift Director / person-in-charge must ensure that all personnel fully understand the requirements of the lift plan and their role in the operation. Workers signatures below attest to this.)*		
Name	Signature	Date
Name	Signature	Date
Name	Signature	Date
Name	Signature	Date
Name	Signature	Date
Name	Signature	Date
Name	Signature	Date
Name	Signature	Date
Name	Signature	Date
Name	Signature	Date
Name	Signature	Date
Name	Signature	Date
Name	Signature	Date
Name	Signature	Date
Name	Signature	Date
Name	Signature	Date
Name	Signature	Date