PAUL SCHERRER INSTITUT

The SwissFEL 250MeV-Injector-Testfacility

K. Dreyer, T. Höwler, Paul Scherrer Institute
(PSI), Villigen, Switzerland

SwissFEL is the next large scale facility of Paul Scherrer Institute (PSI). In 2014, when the 720 m long building is completed, a lot of components has to be aligned.

The **250MeV-Injector-Testfacility** is necessary to demonstrate the feasibility of the planned compact Free Electron Laser SwissFEL. The Facility gives us the opportunity to test and to develop our components, systems and procedures.

The building has been finished in 2009. This was the beginning of machine - installations.

For the construction of the accelerator a new hall with a length of approx. 80 m has been built in 2009. The installation of the machine has been done in 3 phases. In phase 1 the gun and diagnostics has been installed and tested, in phase 2 the booster has been commissioned. In the 3rd phase the injector has been completed including a bunch compression chicane for full injector characterization and compression studies. By the end of 2012 the installation of a SwissFEL prototype undulator is foreseen.

Figure1: SwissFEL 250MeV-Injector-Testfacility (2012)

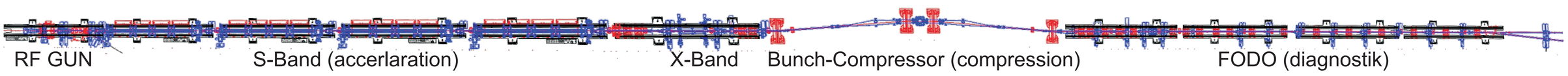

Figure 2: Layout full injector (2012)

The Alignment Network (2009-2012)

- Installation of nearly 100 fiducials into the floor and wall (1.5”cones)
- Profiles all 7.5 m
- Network-measurements for building basic alignment network of main hall
- Final tunnel-network-measurements (closed roof, shielding walls finished)
- Combined measurements of lasertrackers (Leica At901, Leica LTD800), levels (Nivel20, Level Wild N3) and totalstations (TDA5005)
- Calculations by SpatialAnalyzer and Geonet

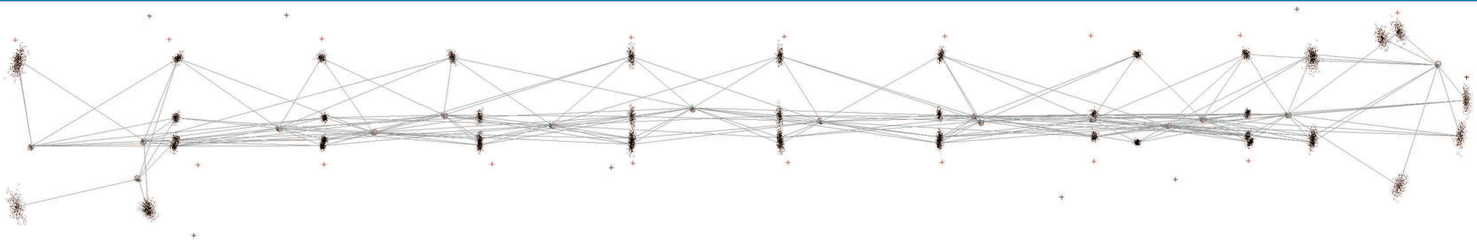

Figure 3: Tunnel network 2012 (AT901/ Nivel20/ optical level instruments)

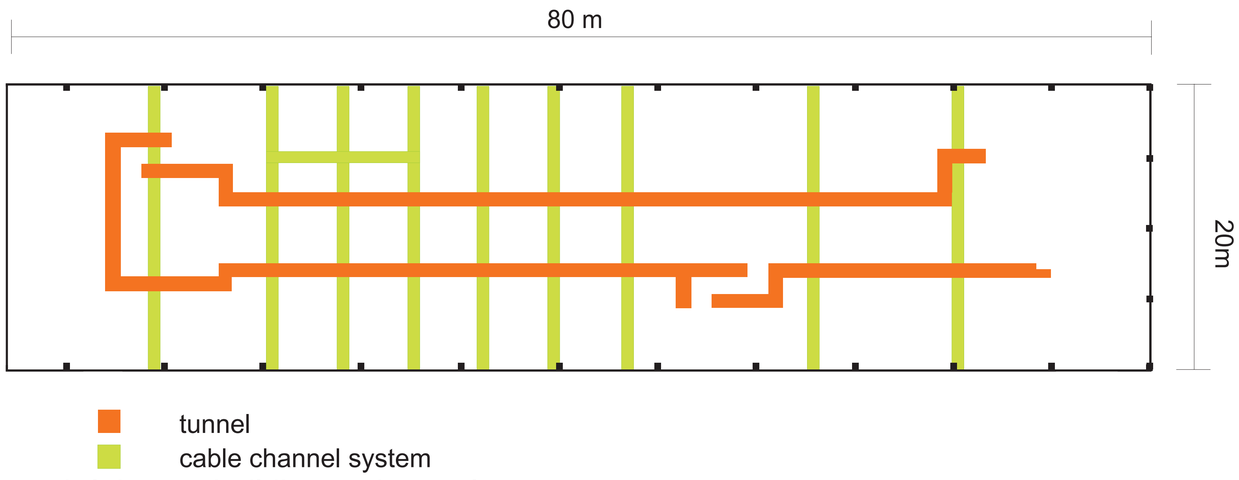

Figure 4: Injector- building and tunnel

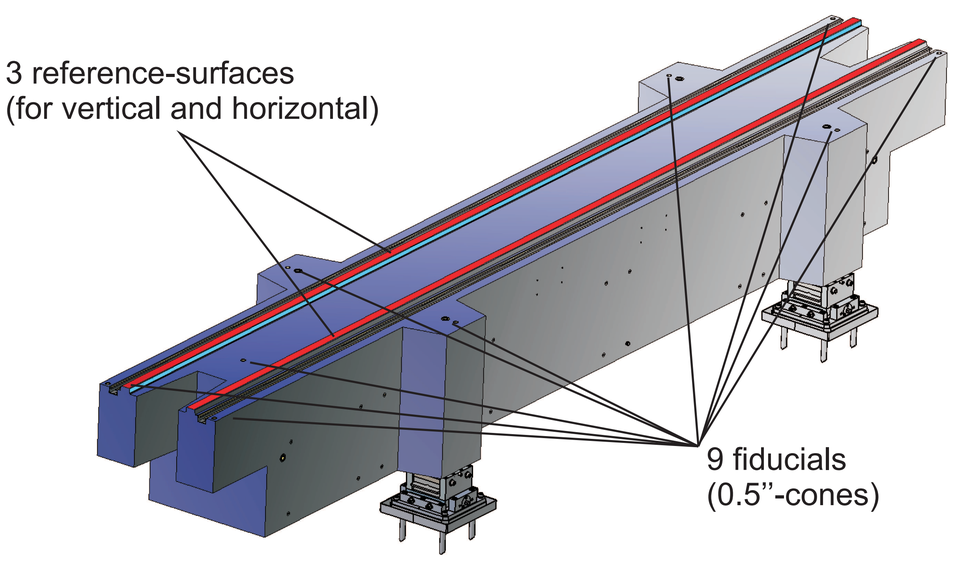

Figure 5: Mineral cast girder and reference-surfaces

Component Alignment

- Mineral cast girders and precise reference- surfaces (horizontal/vertical).
- Referencing of girder-fiducials outside of the tunnel
- Pre-installation of components on girders by the use of default-shimming blocks (20mm)
- Final alignment (matched shimming blocks and foils) and network checks for every installation-phase

Refernces: M. Pedrozzi (ed.), SwissFEL Injector Conceptual Design Report, PSI Report PSI-10-05/
M. Pedrozzi et al., 250 MeV Injector Facility for the SwissFEL Project, in Proceedings of the 31st International Free Electron Laser Conference (FEL), Liverpool, UK, 2009/
T. Schietinger, M. Aiba, S. Bettoni, B. Beutner, M. Csatari Divall, K. Doshekenov, Y.-C. Du, M. Guetg, C.P. Hauri, R. Ischebeck, F. Le Pimpec, N. Milas, G.L.Orlandi, M. Pedrozzi, P. Peier, E. Prat, S. Reiche, B. Smit, A. Trisorio, C. Vicario, PROGRESS REPORT ON THE SwissFEL INJECTOR TEST FACILITY