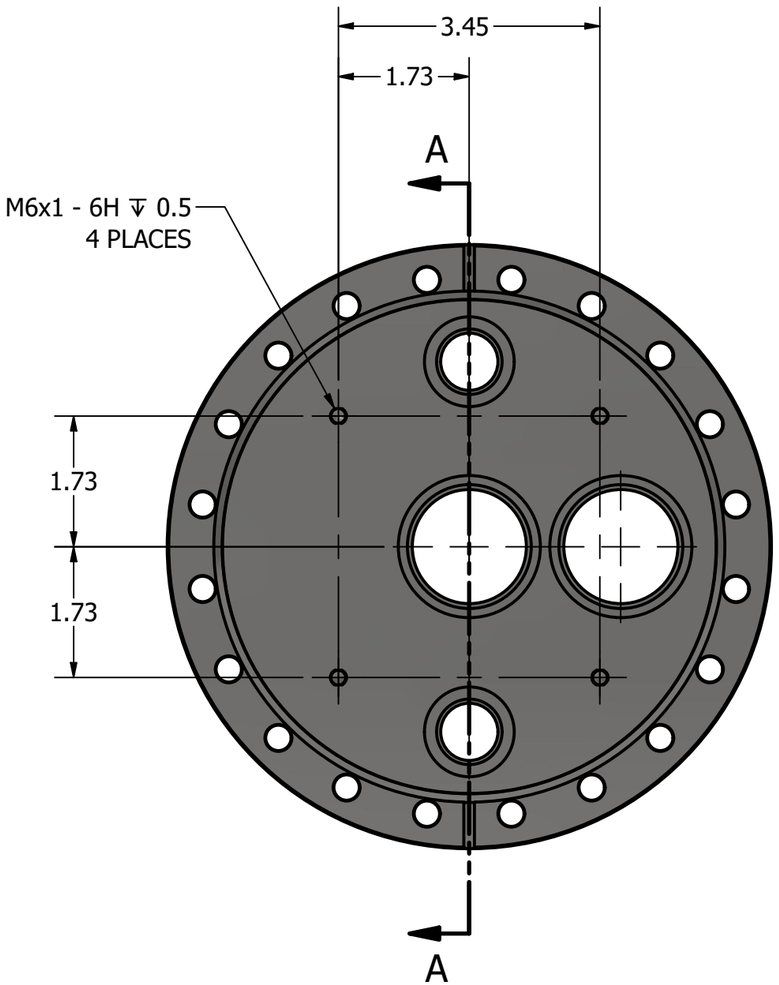

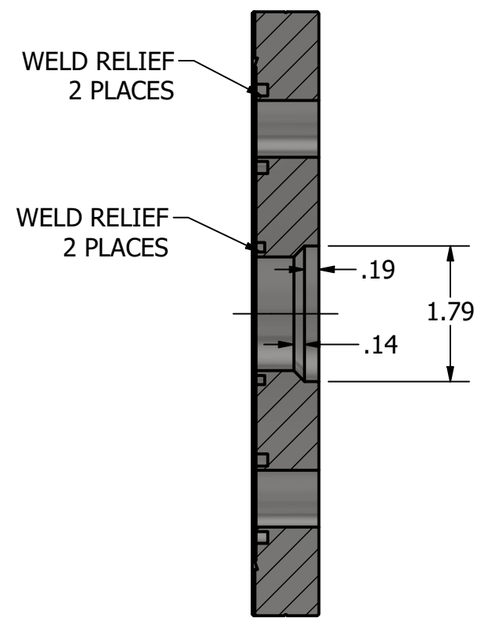

SECTION A-A
SCALE 1 / 2

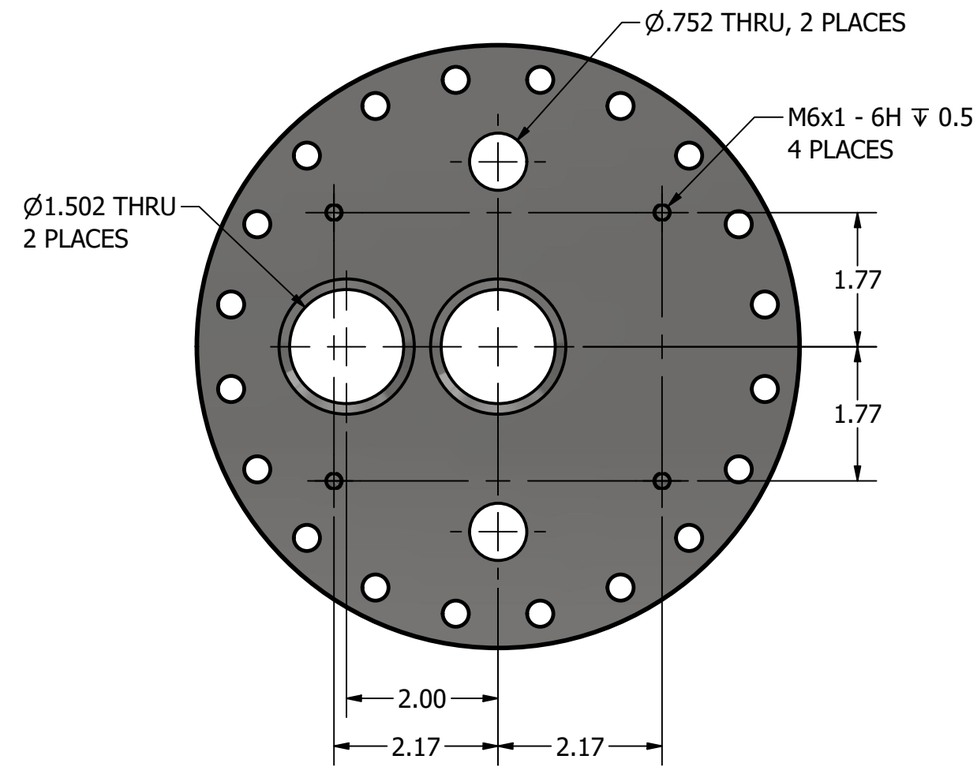

P-25 SUBATOMIC PHYSICS Los Alamos NATIONAL LABORATORY EST. 1943 LOS ALAMOS NATIONAL LABORATORY LOS ALAMOS, NM 87545	DIMENSIONS ARE IN INCHES TOLERANCES UNLESS SPECIFIED FRACTIONAL ± ANGULAR: MACH ± BEND ± TWO PLACE DECIMAL ± 0.01 THREE PLACE DECIMAL ± 0.003 MATERIAL FINISH QUANTITY REQUIRED		NAME	DATE	DUNE LASER PERISCOPE INSERT TOP FLANGE
		DRAWN	JAN	10-20	
		CHECKED			
		ENG APPR.			
		MFG APPR.			
		Q.A.			
		COMMENTS			SIZE B · DWG. NO. 126Y-1767036 · REV.
		NEXT ASSEMBLY	1		SCALE: · WEIGHT: · SHEET 2 OF