PARTS LIST			
ITEM	QTY	PART NUMBER	SHEET
1	2	insulator seal 1073301	
2	2	hn-0133 mod	
3	1	f0800n000nln mod for laser periscope 9-20	2

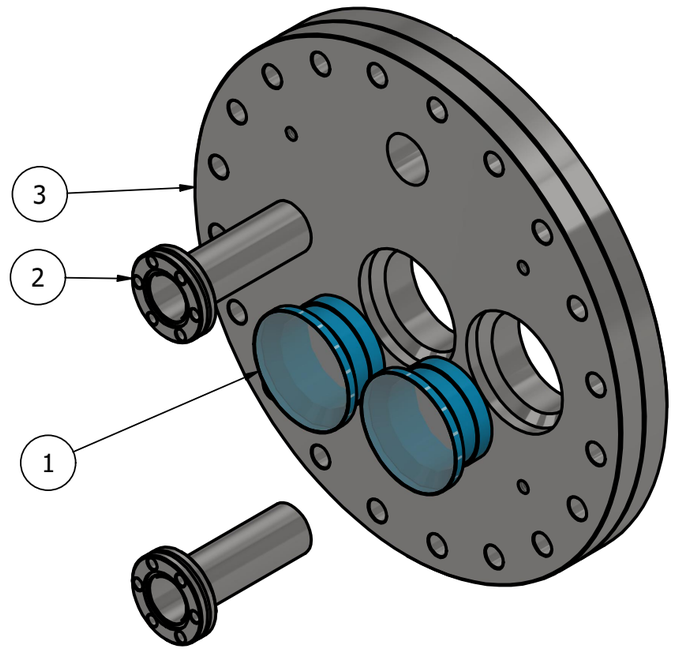

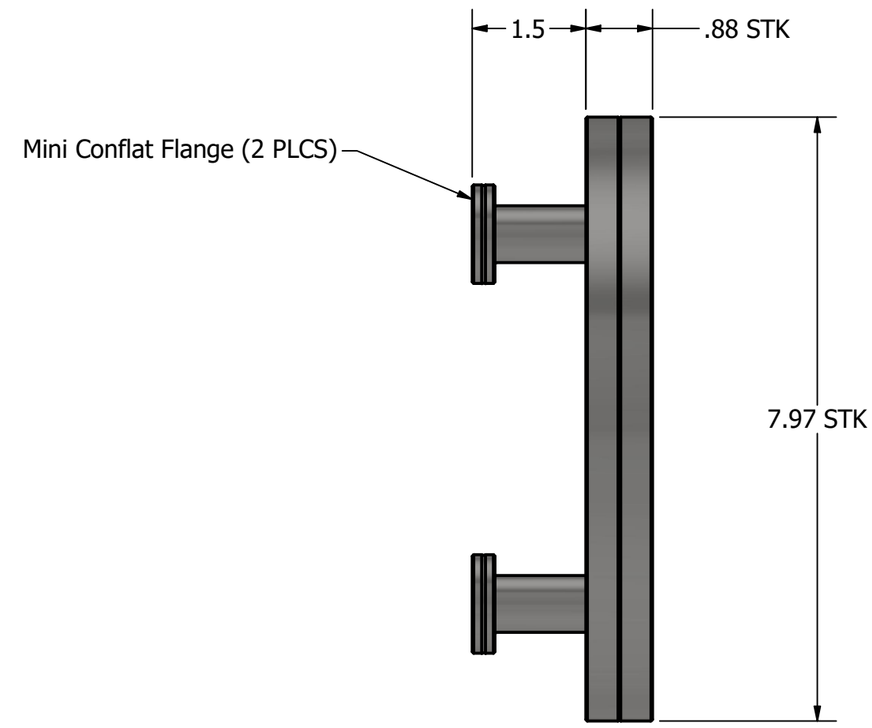

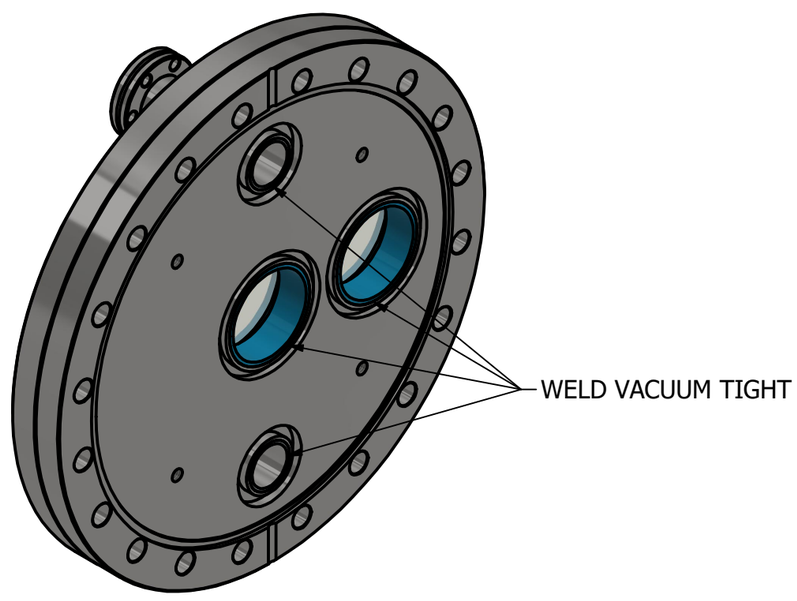

P-25
SUBATOMIC PHYSICS

Los Alamos NATIONAL LABORATORY EST. 1943

LOS ALAMOS NATIONAL LABORATORY
LOS ALAMOS, NM 87545

DIMENSIONS ARE IN INCHES
TOLERANCES UNLESS SPECIFIED
FRACTIONAL ±
ANGULAR: MACH ± BEND ±
TWO PLACE DECIMAL ± 0.01
THREE PLACE DECIMAL ± 0.003

MATERIAL

FINISH

QUANTITY REQUIRED

	NAME	DATE
DRAWN	JAN	9-20
CHECKED		
ENG APPR.		
MFG APPR.		
Q.A.		

COMMENTS

NEXT ASSEMBLY

DUNE LASER PERISCOPE
INSERT FLANGE WELDMENT

SIZE B | DWG. NO. 126Y-1767036 | REV.

SCALE: | WEIGHT: | SHEET 1 OF