DESCRIPTION: LAYOUT, LBNF ABSORBER COMPLEX WITH MODIFICATIONS TO 100% PRELIMINARY NSCF

PROJECT: LBNF-DUNE_Near_Site

CATEGORY: LAYOUT

REV	REVISION CONTROL DOCUMENT	DATES	SIGNATURES	
-	F10138777---RCD		DRAWN	
			APPROVED	

CONCEPTUAL
NOTE FOR PRODUCTION
OR PURCHASING PURPOSES
UNCONTROLLED COPY
LAST SAVED 29JAN21

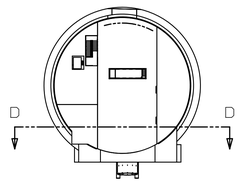

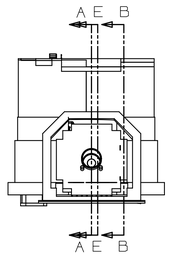

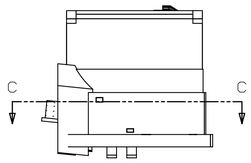

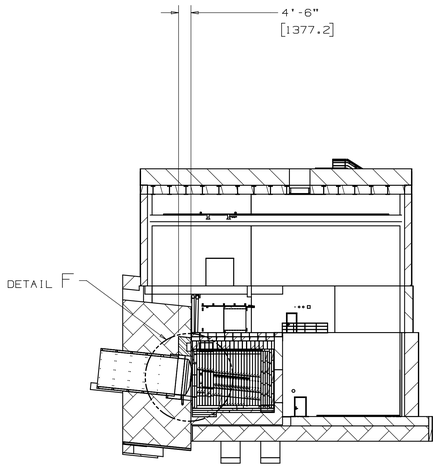

SECTION A - A
SCALE - 1:256

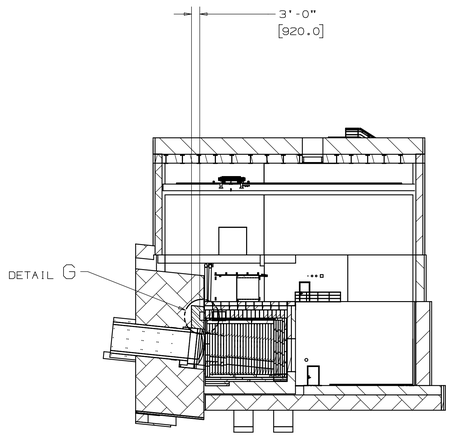

SECTION E - E
SCALE - 1:256

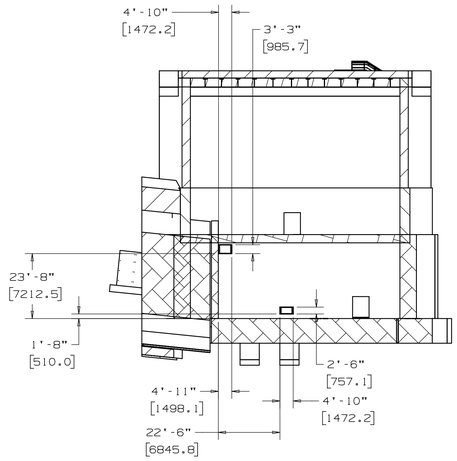

SECTION B - B
SCALE - 1:256

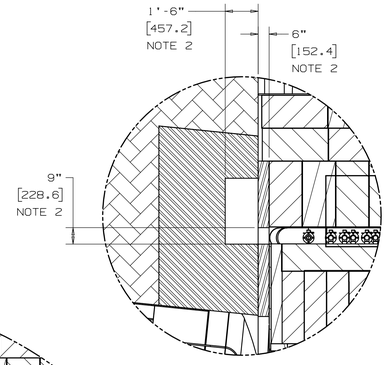

DETAIL G
SCALE 1:32

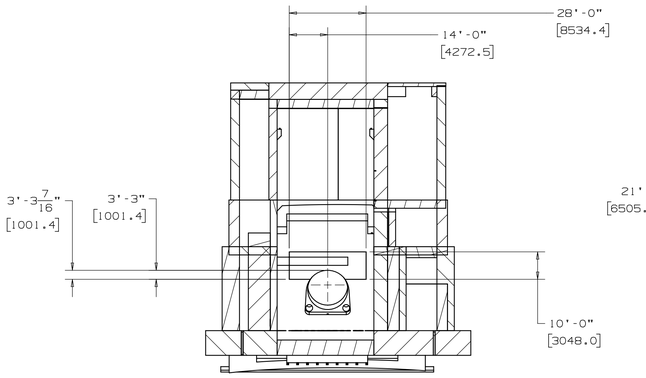

SECTION D - D
SCALE - 1:256
ROTATED 180°
ABSORBER SHIELD PILE
REMOVED FOR CLARITY

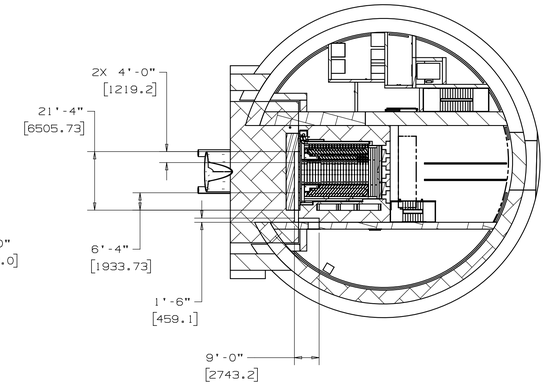

SECTION C - C
SCALE - 1:256

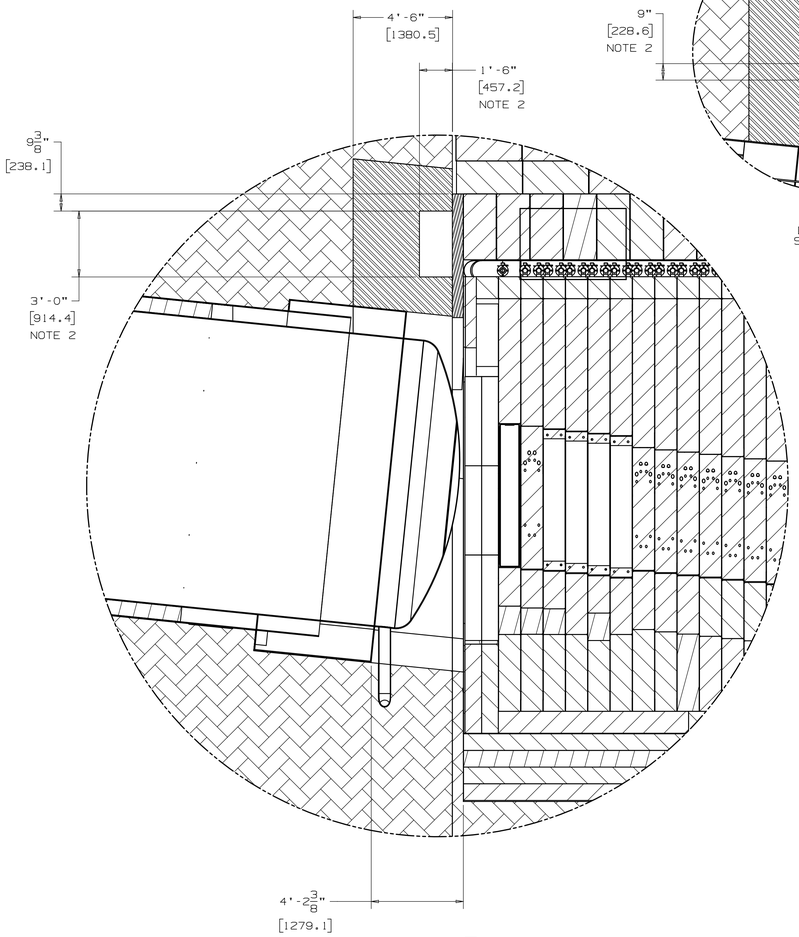

DETAIL F
SCALE 1:32

NOTES:

1. DIMENSIONS IN BRACKETS [XX.X] ARE METRIC. ENGLISH DIMENSIONS ARE IN ARCHITECTUAL FEET AND INCHES, ROUNDED TO THE 1/16 OF AN INCH.

2. AREA IN THESE DIMENSIONS ARE CRITICAL FOR "SHINE PROTECTION" FOR WORKERS, DEVIATIONS IN FINAL DESIGN MUST BE REVIEWED AND APPROVED BY FNAL.

UNLESS OTHERWISE SPECIFIED				
±.X	±.XX	±.XXX	±X/X	±X°
±1	±.02	±.005	1/16	1°

BREAK ALL SHARP EDGES, MAX: .015
DO NOT SCALE DRAWING
DIMENSIONS BASED ON: ASME Y14.5-2009
MAX MACHINE ALL SURFACES: 125 √
DRAWING UNITS: INCHES

THIRD ANGLE PROJECTION

DRAWN	M.SAWTELL	DATE	24-Apr-2020
CHECKED		DATE	
APPROVED		DATE	
USED ON	F10122682		
MATERIAL			
GROUP: Neutrino Division		CAGE CODE: 0U5R6	

FERMI NATIONAL ACCELERATOR LABORATORY
UNITED STATES DEPARTMENT OF ENERGY

NAME: LAYOUT, LBNF ABSORBER COMPLEX WITH MODIFICATIONS TO 100% PRELIMINARY NSCF

SCALE	SIZE	DRAWING NUMBER	SHEET	REV
1:512 AS SHOWN	E	F10138777	1 of 1	-

TEMPLATE VERSION: 2018.2.03