SPY@DND
March the 5th, 2021

Andrea Bersani

INFN Sezione di Genova
Istituto Nazionale di Fisica Nucleare

SPY@DND20

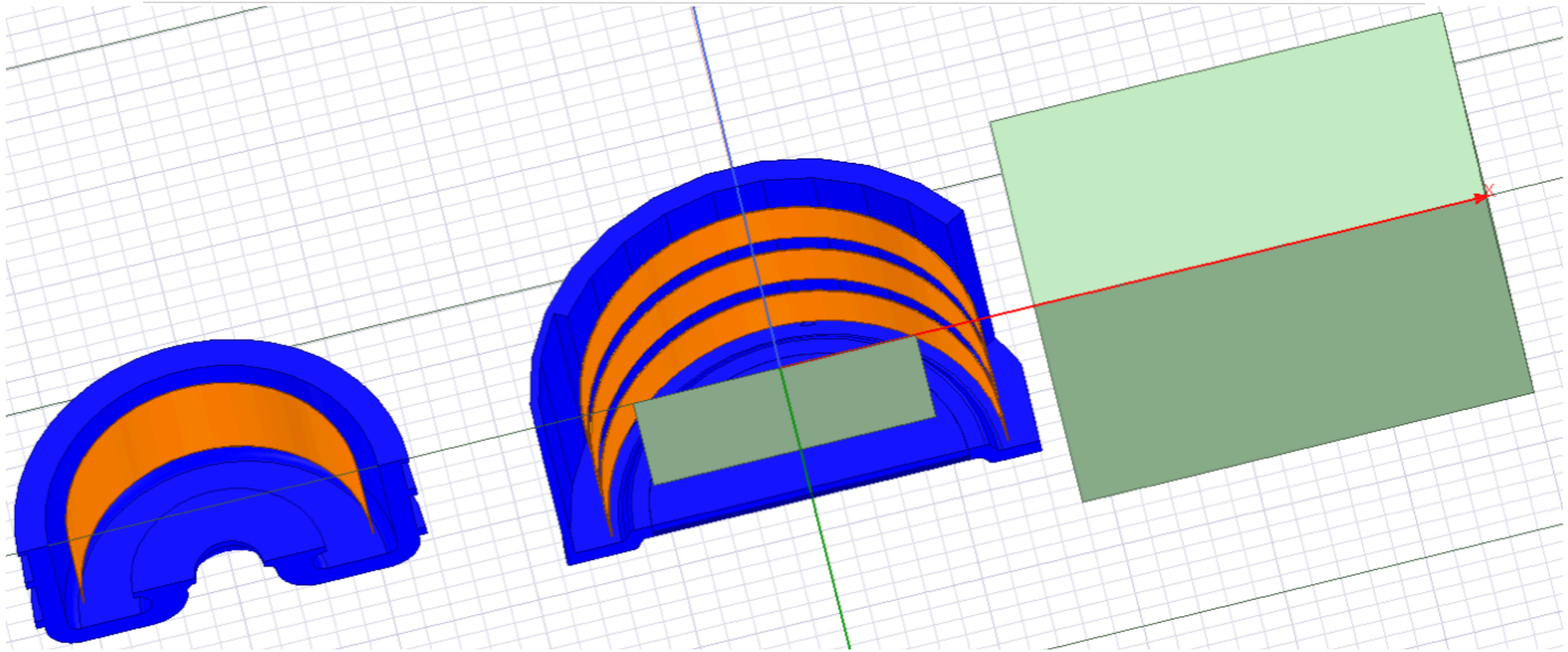

- Adjusted spacing
- Preliminary optimisation on SPY coils position
- Preliminary study on ND-LAr stray field
- Some evaluation on the effect of end caps thickness

The big table

	SPYDND13	SPYDND15	SPYDND18	SPYDND19c	SPYDND20a	SPYDND20b	SPYDND20c
Bmin on TPC	0.4689 T	0.4655 T	0.4845 T	0.4998 T	0.5015 T	0.5006 T	0.4985 T
Bmax on TPC	0.5497 T	0.5507 T	0.5108 T	0.5098 T	0.5127 T	0.5125 T	0.5122 T
Force along beam	102 kN	92 kN	128 kN	200 kN	200 kN	215 kN	230 kN
Force along axis	0.94 MN	0.72 MN	0.89 MN	0.51 MN	0.44 MN	0.45 MN	0.47 MN
Total Current	3.8 MA turn	3.8 MA turn	3.46 MA turn	3.36 MA turn	3.36 MA turn	3.36 MA turn	3.36 MA turn
Stored energy	42.8 MJ	NA	47 MJ	34 MJ	33.37 MJ	33.34 MJ	33.27 MJ
Force on SAND	36 kN	24 kN	10 kN	13 kN	8 kN	8 kN	7.5 kN
Force on endcap					2.28 MN	2.1 MN	2.03 MN

- Force along beam: force felt by the 4 coils pointing towards SAND
- Force along axis: force felt by 2 coils pointing towards the other 2 coils
- Force on SAND: force felt by SAND yoke, generated by stray field

Field map

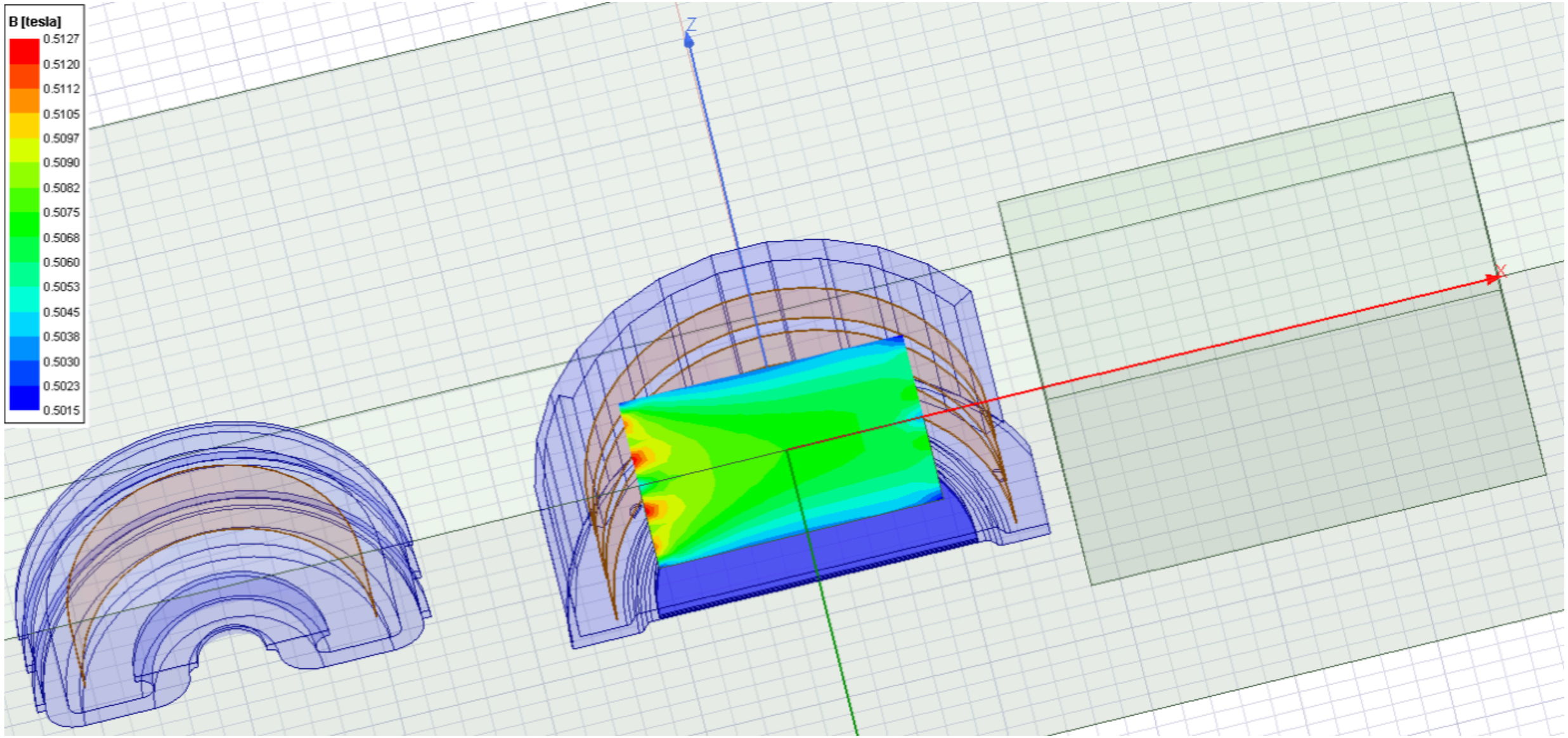
B [tesla]
0.5127
0.5120
0.5112
0.5105
0.5097
0.5090
0.5082
0.5075
0.5068
0.5060
0.5053
0.5045
0.5038
0.5030
0.5023
0.5015
Z
X

Stray field on ND-LAr
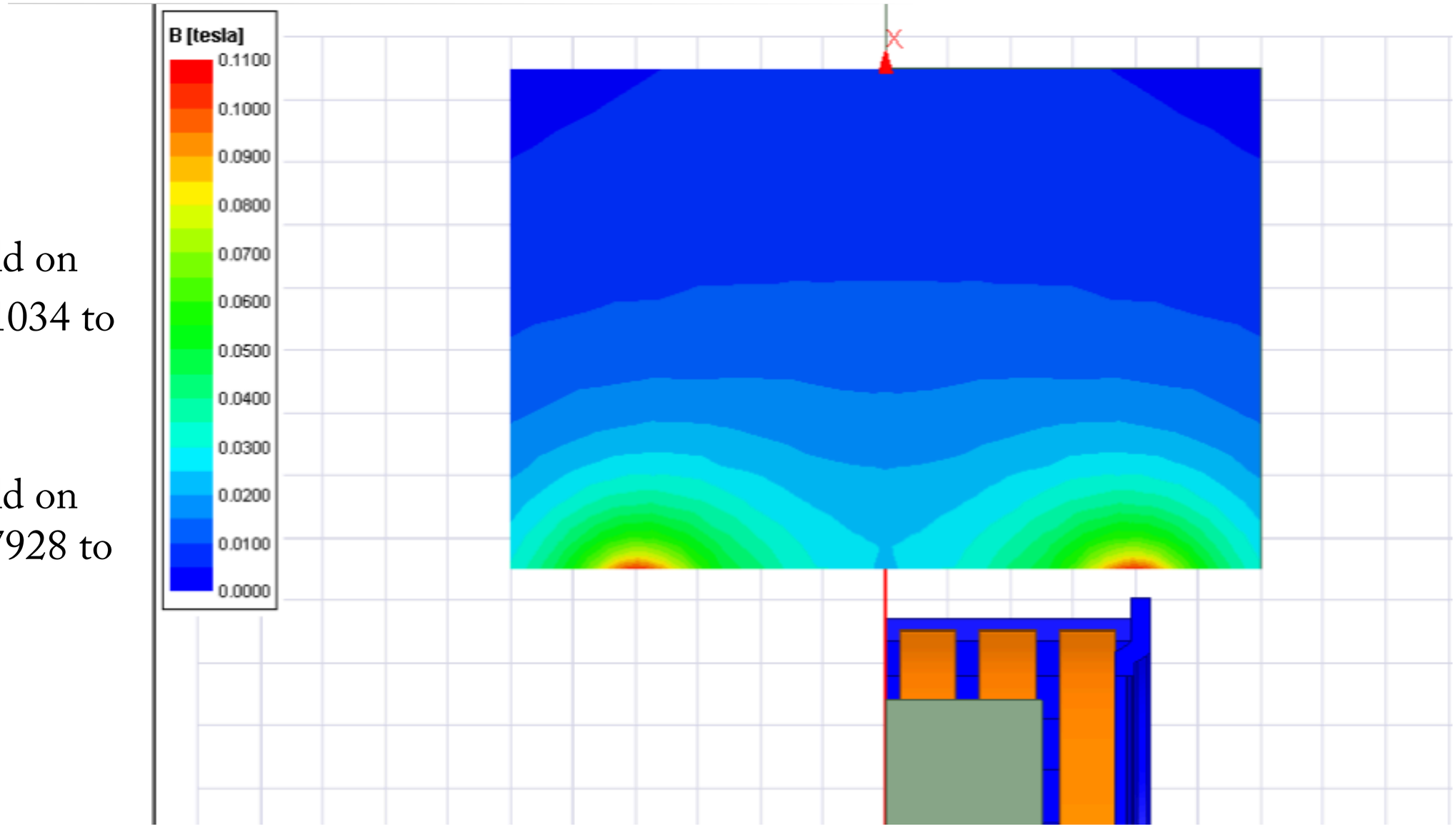
- Maximum field on ND-LAR: 0.1034 to 0.1041 T
- Maximum field on conductor: 0.7928 to 0.8048 T