DE LA RECHERCHE À L'INDUSTRIE

Assembly of the cryomodules: post clean room operations

S. Berry

Low Beta 650 MHz Cryomodule – Preliminary Design Review – March 2021 the 10th

Content

- Cryomodule main assemblies description
- Infrastructure and Rail systems
- Work Stations
- Phases
- In detailed assembly process (on going work)
- Concluding Remarks

Description of the cryomodule

Main assemblies

- Beam line assembly

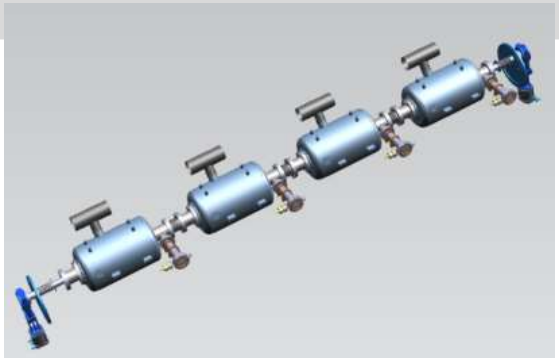

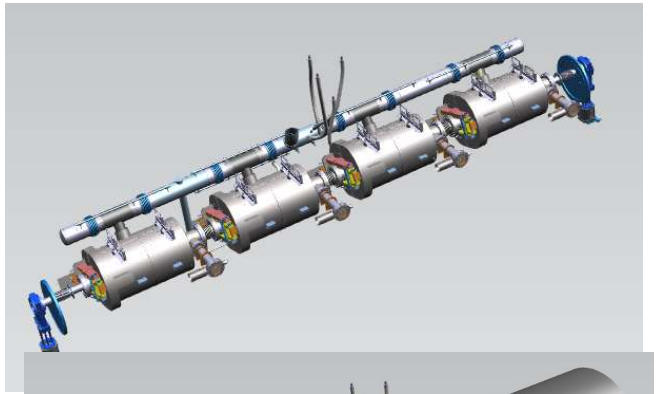

- Completed Beam line assembly

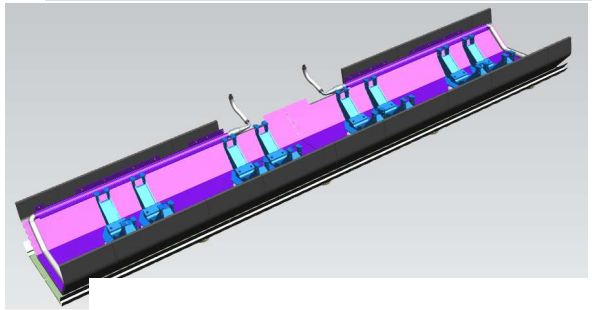

- Strongback assembly (prepared to receive beam line)

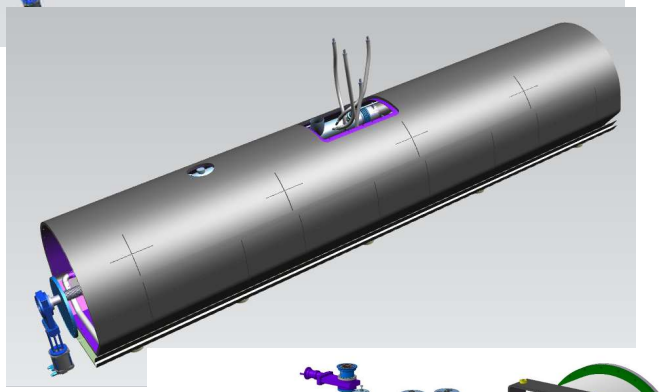

- Completed Beam line and Strongback assembly

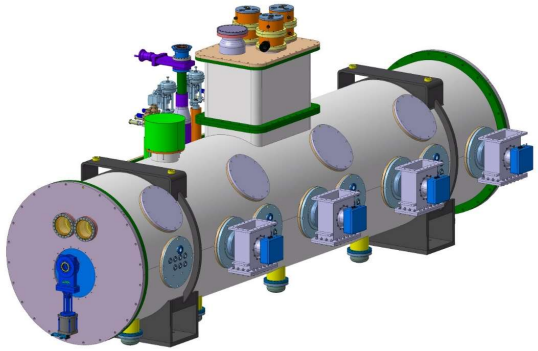

- Top CM assembly

  CM test : ~6790 kg

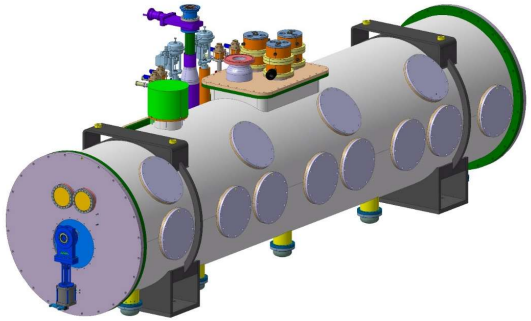

- transport CM assembly

  CM transport : ~6370 kg

Supratech Chimie-Salles Blanches (Bldg. 124)

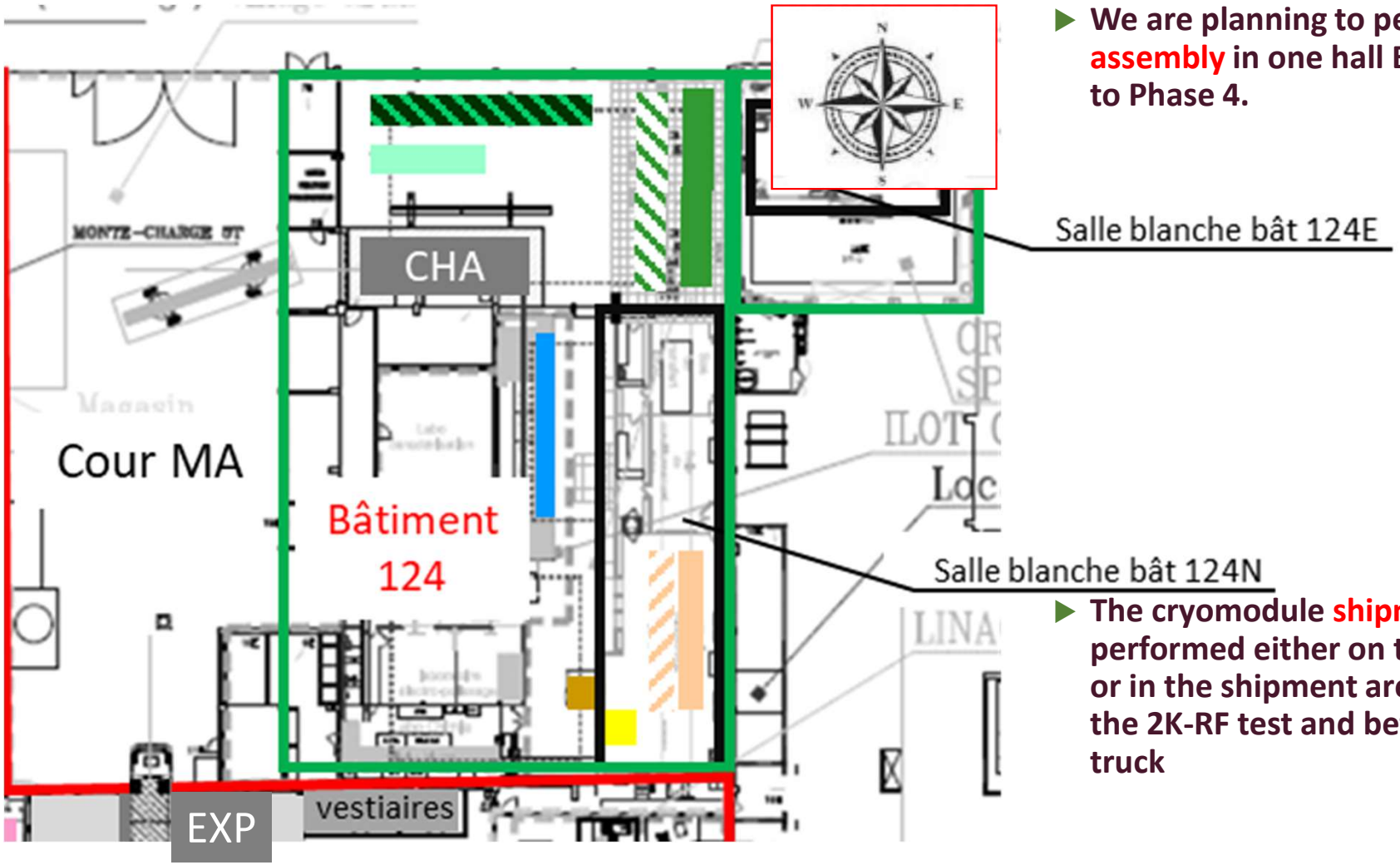

- **We are planning to perform the Cryomodule assembly in one hall Building 124 from Phase 1 to Phase 4.**
- **The cryomodule shipment preparation can be performed either on the last WS in hall Bdg124 or in the shipment area (EXP in Bdg 126) after the 2K-RF test and before the loading on the truck**

Rail systems in Hall 124

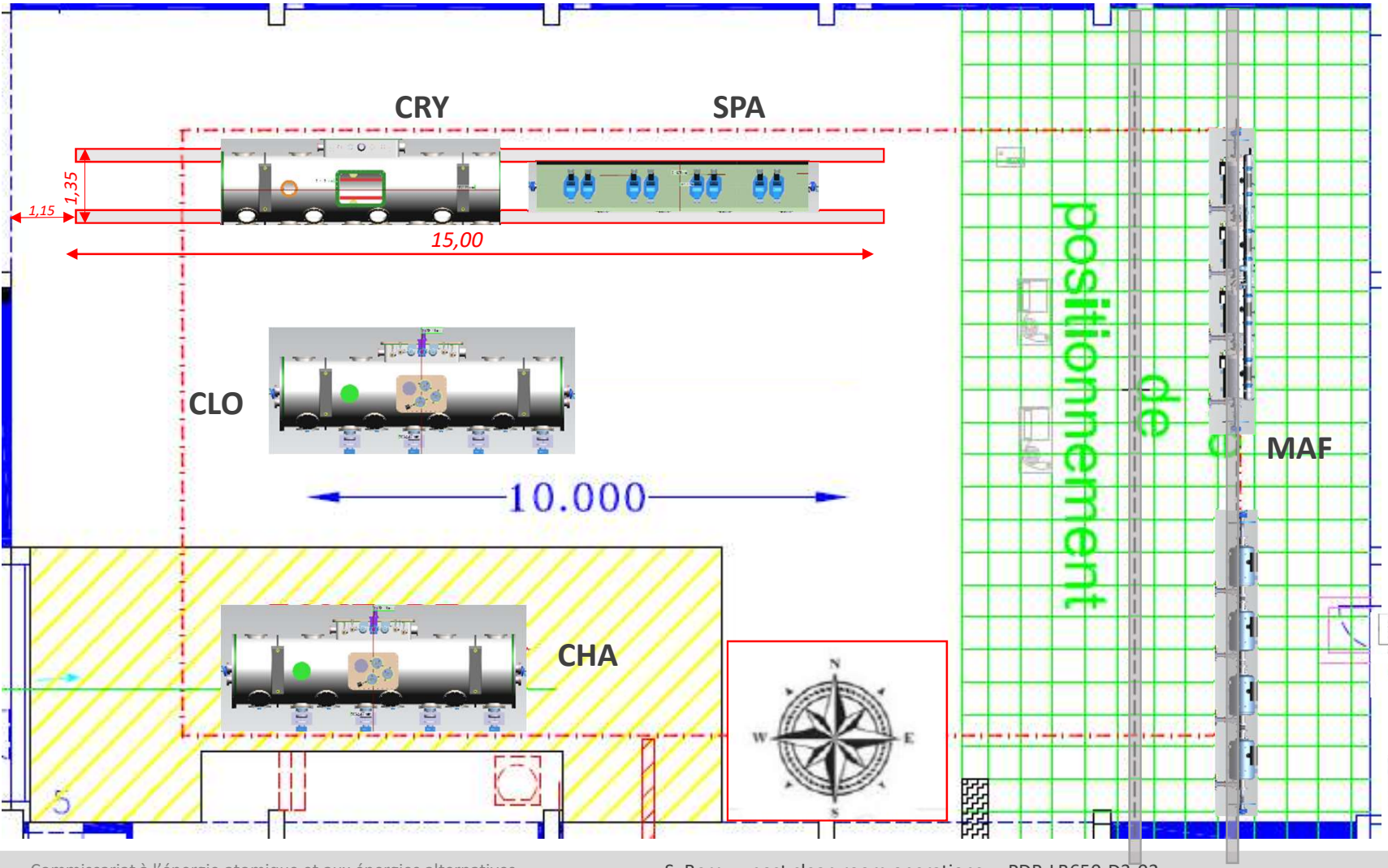

Two rail systems:

- South to North rail (46m) → beam line

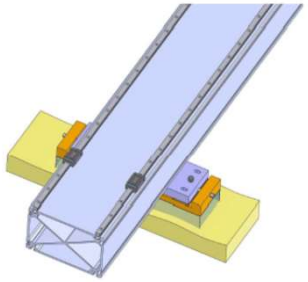

- East to west rails (15m) → Strongback and vacuum vessel

Work stations in Hall 124

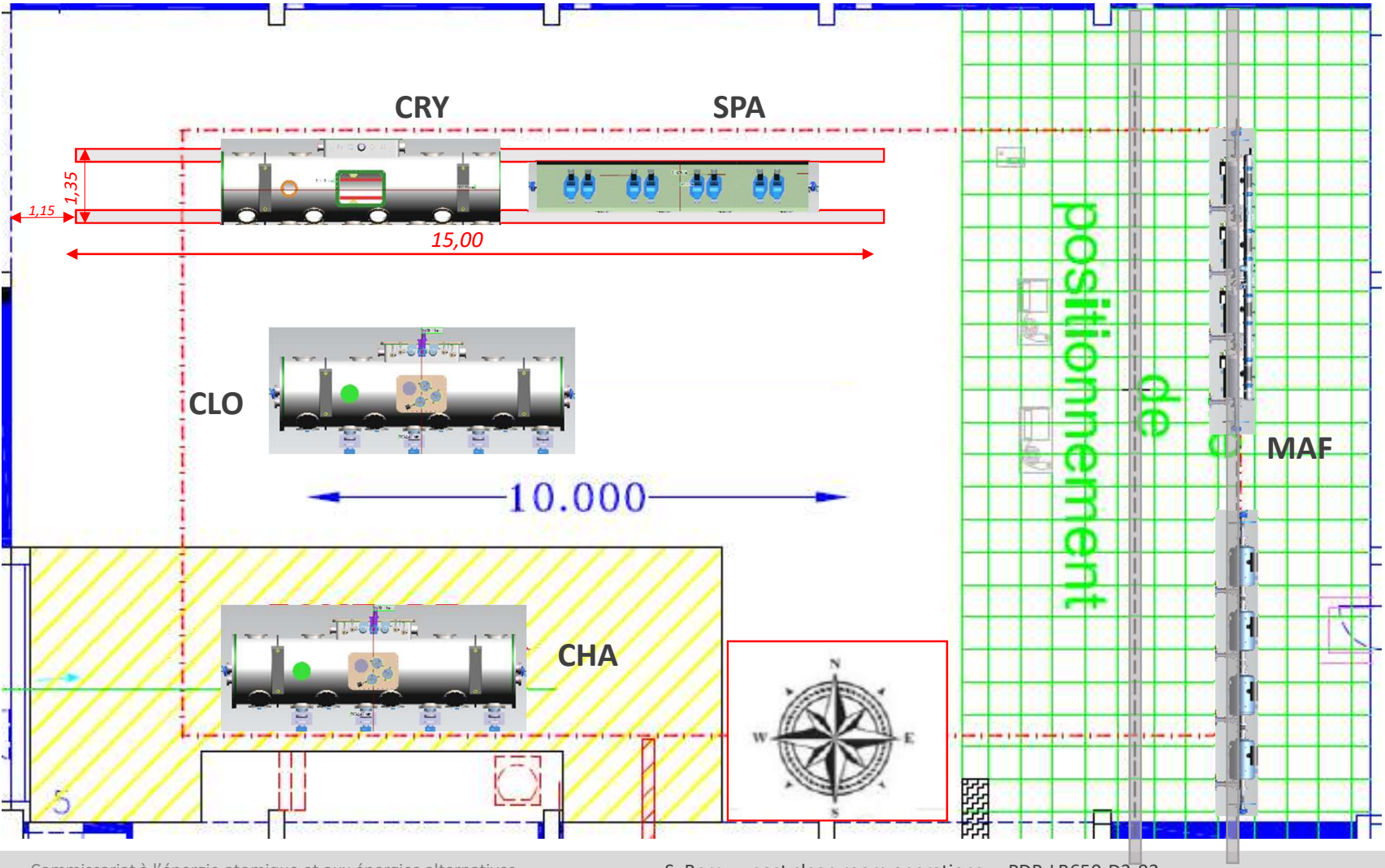

Work stations names:

- MAF: « MAsse Froide »
- SPA: Strongback Preparation Area
- CRY: CRYostating
- CLO: CLOsure
- CHA: Cryomodule Handling Area

Phases and transfers

- **Phase 1:** *in parallel*
  - **beam line assembly** in ISO4 clean room on their posts (south-north rails)
  - **strongback assembly and leveling** in the hall (north part) on the east-west rails

Transfer of the uncomplete beam line from ISO4 to outside the cleanroom with rails

- **Phase 1 bis:** *in parallel*
  - **Complete the beam line** with parts difficult to assemble above the strongback (on south-north rails)
  - **Bring the vacuum vessel** on the workstation and align it on the east-west rails

Transfer of the completed beam line from posts to above the strongback with red girder

- **Phase 2: beam line and strongback marriage until strongback+coldmass completion**
  - We 'll use the red girder capability to lower down the beam line to the strongback
- **Phase 3: Insertion of the strong back+coldmass in vacuum vessel**
  - until the vacuum vessel is closed with its endcap flanges

Transfer of the cryomodule to the last workstation with yellow girder

- **Phase 4: top hat and side port assembly and all flanges closure**

Existing tooling for beam line transfer (phase 1 to 1 bis)

- **The tooling from XFEL project OR the ESS cavity posts can be used for beam line transfer from ISO4 clean room to the assembly hall**

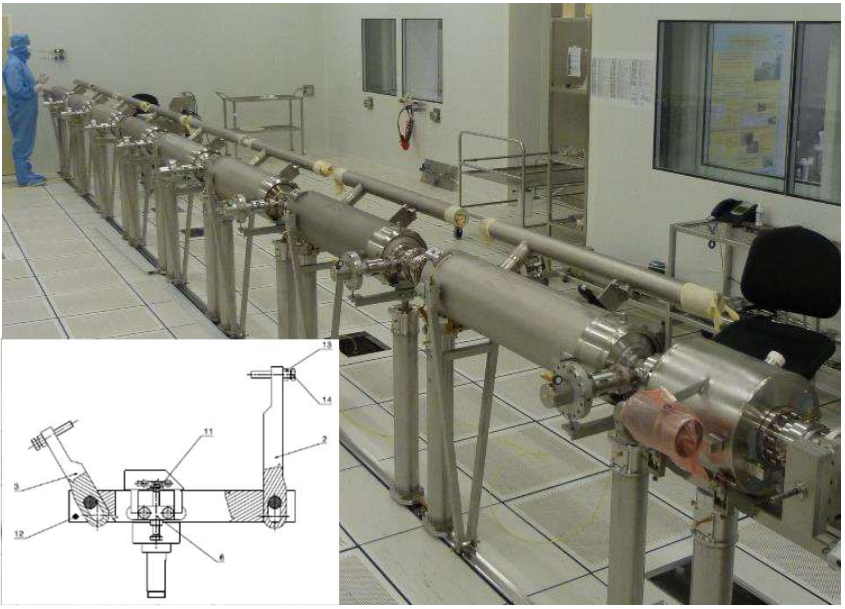

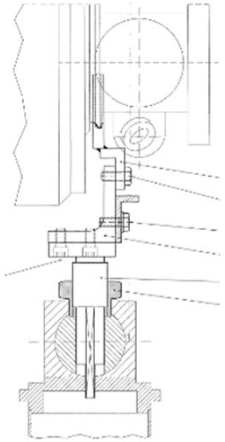

Coupler side: precise positioning on the transition collar
Tuner side: unprecise tank support on tuner side
(compensated by V-shape locker of the roll)

Ball support Coupler side
Roll&transverse adjustment Tuner side

BUT in any case, Interfaces have to be tuned to be compatible with LB650 cavities.

Existing tooling for beam line transfer (phase 1ter to 2)

- **The tooling from XFEL project (red girder with posts from EURIDIS) can be used for beam line transfer from MAF to CRY workstation** (safe working load 3.5 T)
  - Transverse inter post dist: 1860 mm; it can fit across the new East-West rail system

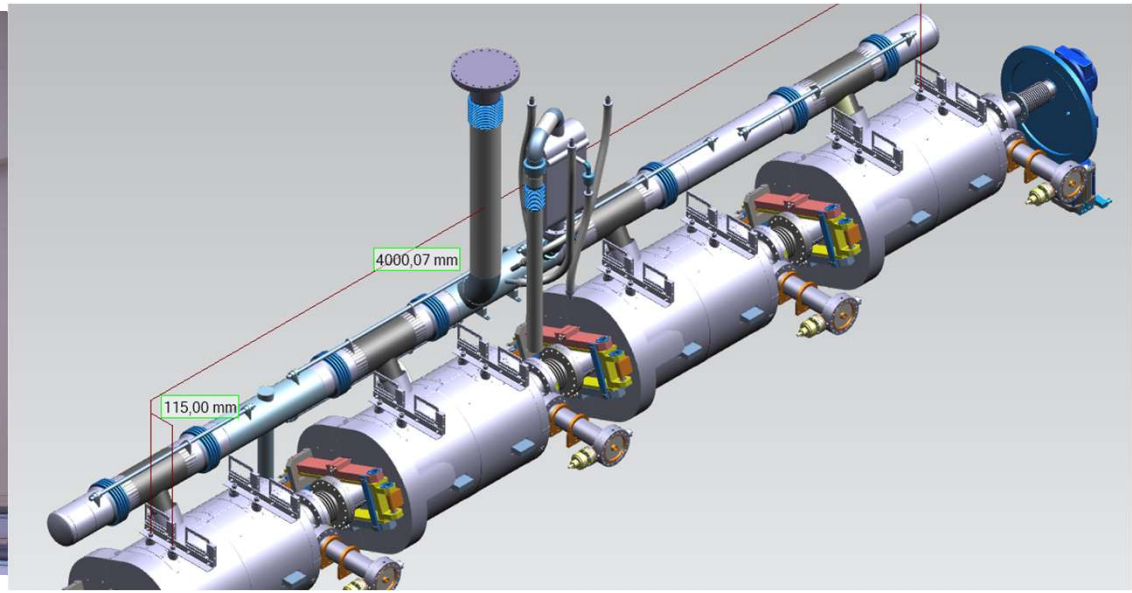

BUT anchoring lugs have to be design to connect to the "CAVITY SURVEY SUPPORT" threaded holes of helium tank of LB650 cavities

Existing tooling for module transfer (phase 3 to 4)

- **the cryomodule lifting tooling from XFEL project (yellow girder from KSR Gmbh) and Interfaces have to be tuned to be compatible with LB650 cryomodules.**
  - Longit. max inter axis 7.9 m: **3.66 m**

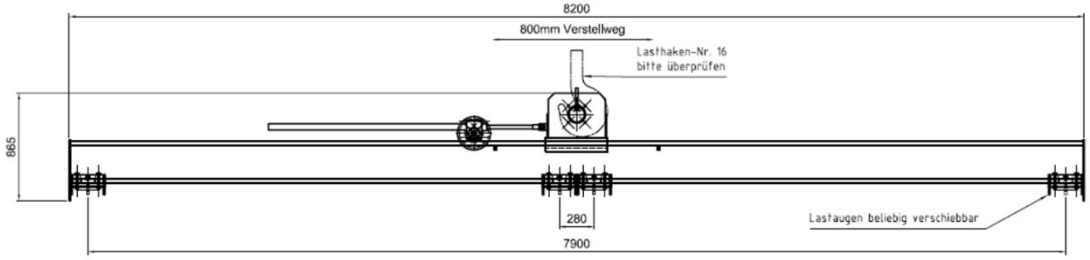

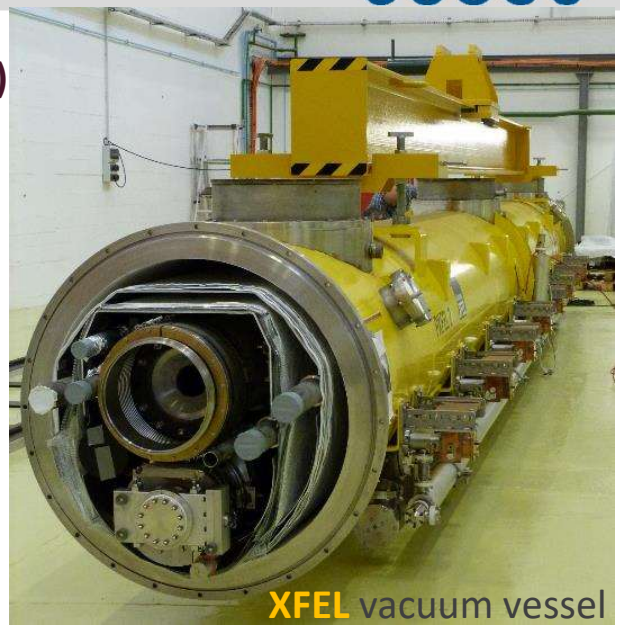

  - Transverse max inter axis 0.6 m+/- 0.15; →change transverse distance of VV or of tool

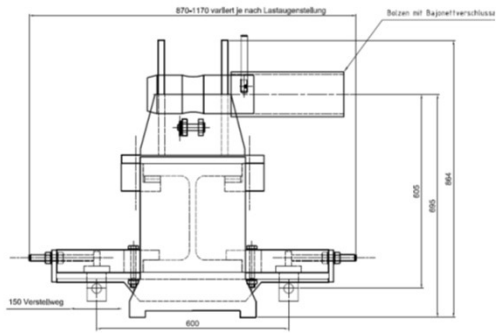

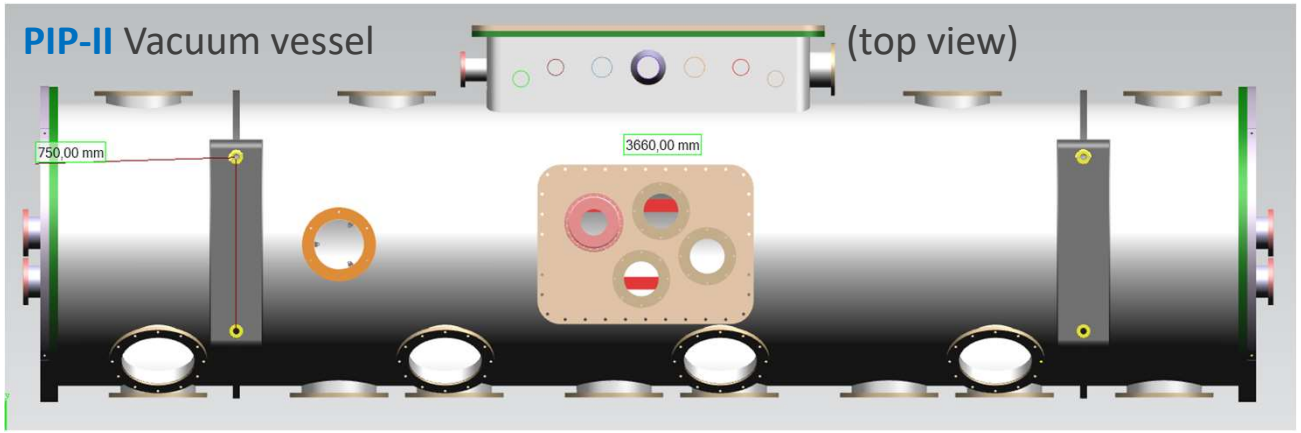

- **safe working load 8.5 T, overall size 8.2 m**

Phase 1: Clean room ISO4 / / SPA Work Station

▶ Assembly of the beam line in ISO4 CR

- In-line leak check of the gate valves
- If needed assembly and leak test of Gate valves with beam end pipe (depending on the reliability of the assembly)

Pre-alignment of the cavities is obvious and particular attention to the roll

- Beam line assembly (incl. couplers) and leak tests with Helium

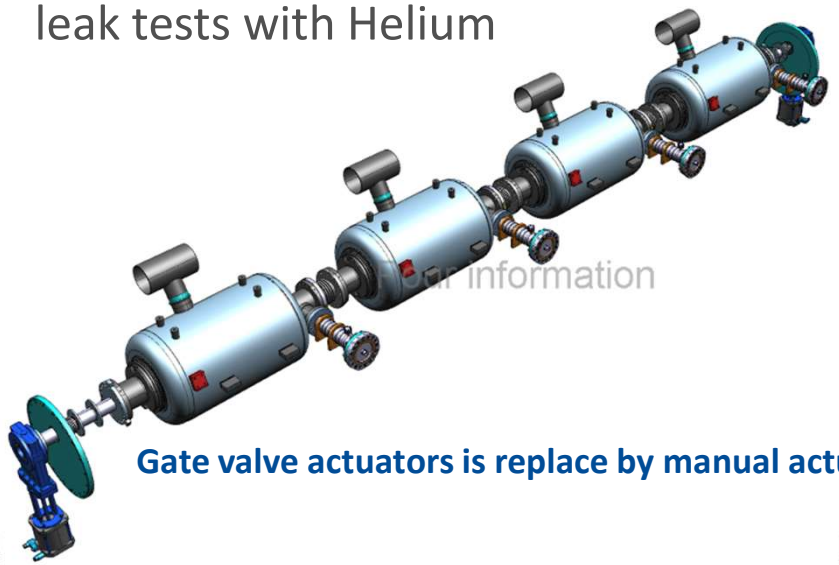

Gate valve actuators is replace by manual actuators

▶ Bring strongback parts and assembled the strongback

- The SB is anchored to the green rail casted to floor

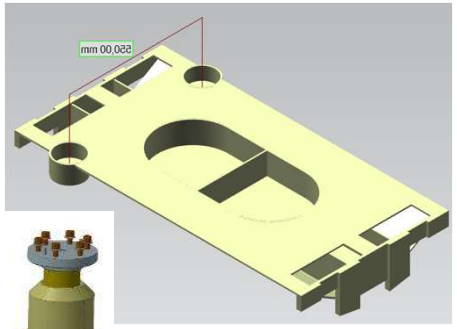

LB650 screws for segment assembly are not implemented yet

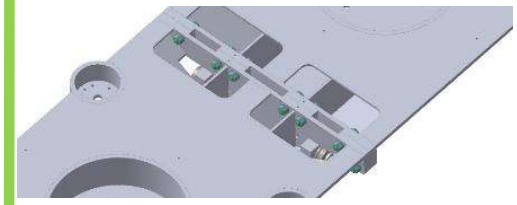

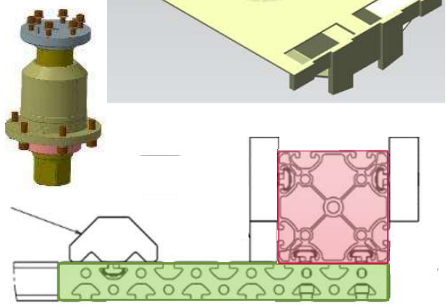

▶ complete the strongback to get the strongback assemble with cavity posts

- 2203000_Strongback_Post_cavity_LB650_ Assembly incudes 2302002_Assy_cavité post
- Connect thermal straps

Phase 1 bis: MAF1 Weldment / / CRY Work Station

- **Weld all cryogenic pipes to the beam line On workstation MAF1**

  Check pre-alignment of the cavities if large misalignment adjust before welding

  - two phase pipe
  - the cool down / warm up line

- **Bring the Vacuum vessel to the WS**
  - Using a similar design as the tooling used for ESS cryomodule, the vacuum vessel will be put on wheels on the external rail (on the East-West rail system)

East-west rails
PIP-II :

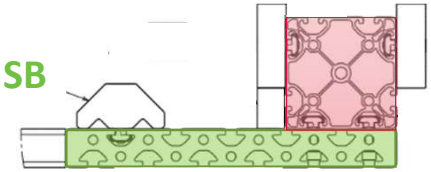

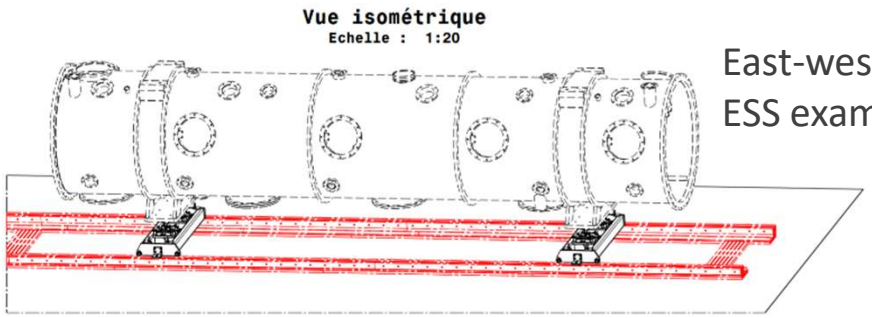

East-west rails
ESS example

Phase 1 ter: MAF2 Assembly / / CRY+SPA Work Station

- **Complete the beam line to get the coldmass equipped**
  - Assemble simulta_ _neously the magnetic shield and the tuning systems

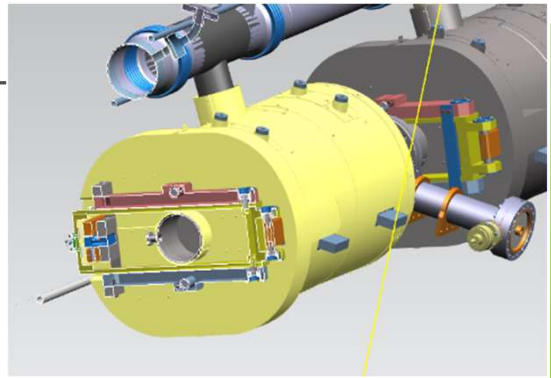

- **Prepare the coldmass for the transfer with the red girder**
  - Lifting of the beam line and remove post*

*** In the detail study of the assembly process we'll consider to lift the cold mass as soon as possible to free the cavity posts in order to start ASAP the next beam line assembly**

- **Levelling of the strongback assembly**
  - Monitor with Laser tracker,
  - Adjust with the studs

- **Warm magnetic shield assembly in the vacuum vessel**

- **Alignment of the vacuum vessel to the rail system**
  - Laser tracker

Phase 2: SPA beam line and strong back marriage

- **The Beam line assembly is moved down to the strongback assembly**
  - C-Shaped_Block assembly
- **Final-alignment of the cavities.**
  - With laser tracker and T-Probe
  - The reference are the cones located on the cavity flanges
- **Completion of the strongback+ cold mass assembly**
  - Thermal straps (pictures on the right)
  - Thermal shield
  - Multi layer insulation (not shown below)
- **After completion, HBCAM will be set up with their supports anchored to the floor**

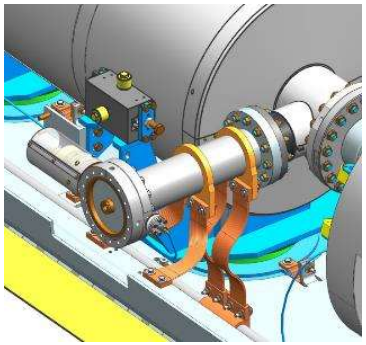

Thermal straps on the coupler

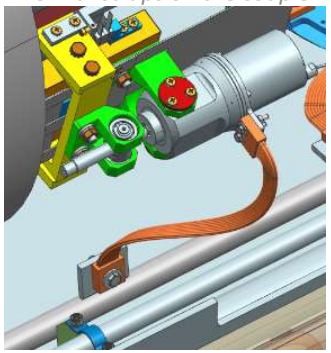

Thermal straps on the tuner motor

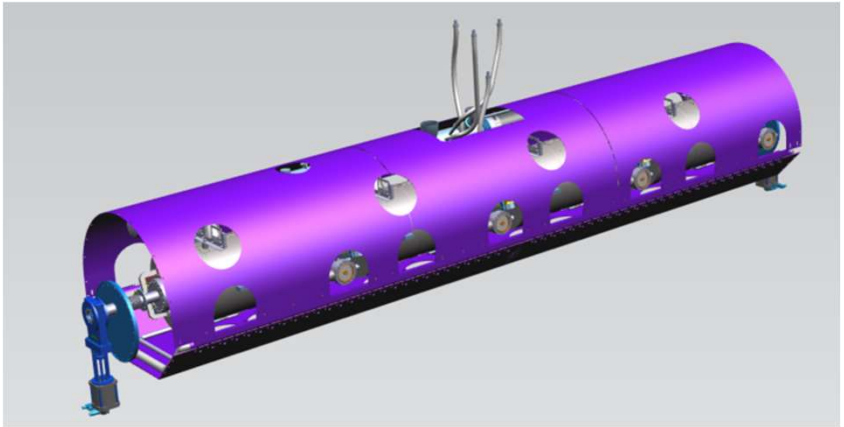

Phase 3: cryostating

- **Insertion of the vacuum vessel over the strongback+coldmass**
  - the strongback supports are removed one by one,
  - Studs are stored carefully

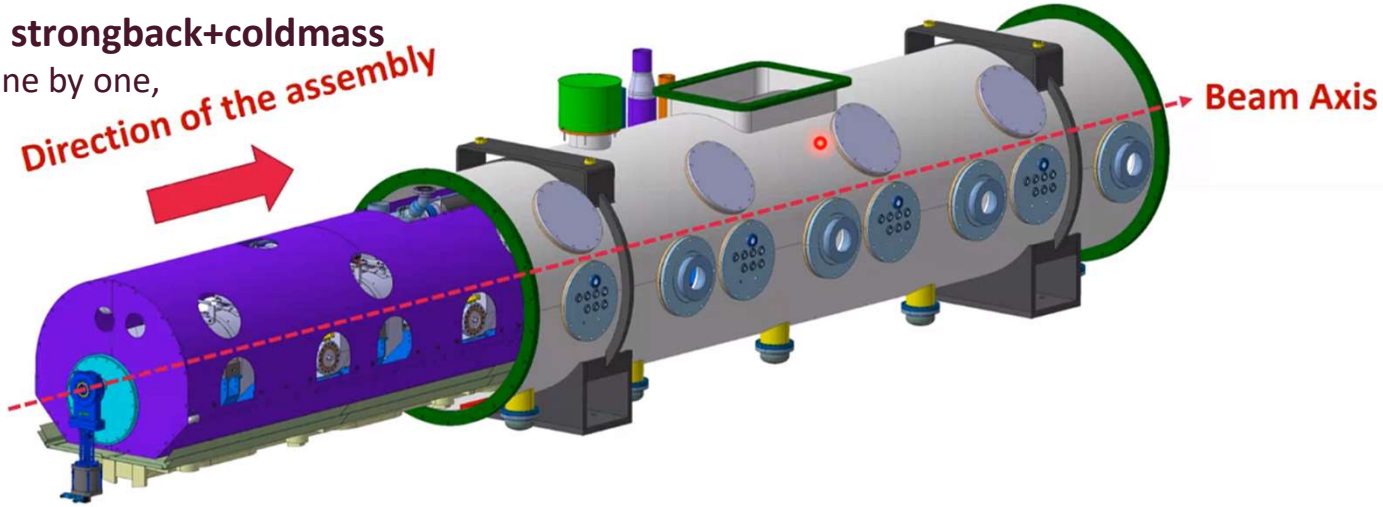

Wheels and studs not shown on the picture

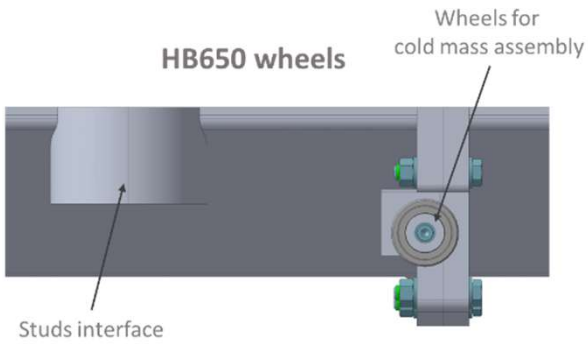

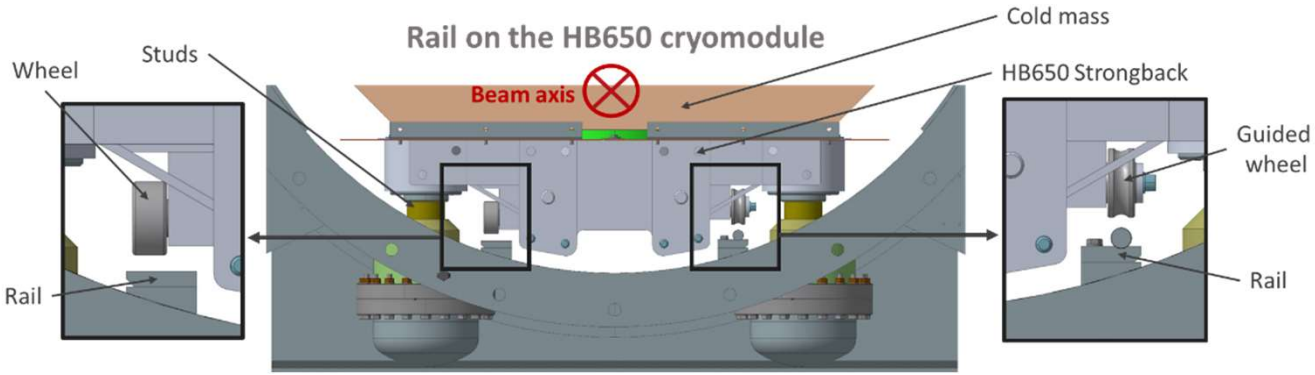

- **Studs assembled in the vacuum vessel to their exact position and height**

Phase 3: Work Station CRYostating

- Assembly of the 2201002_Flange_endcap_Vessel and 2201002_Flange_endcap_Vessel

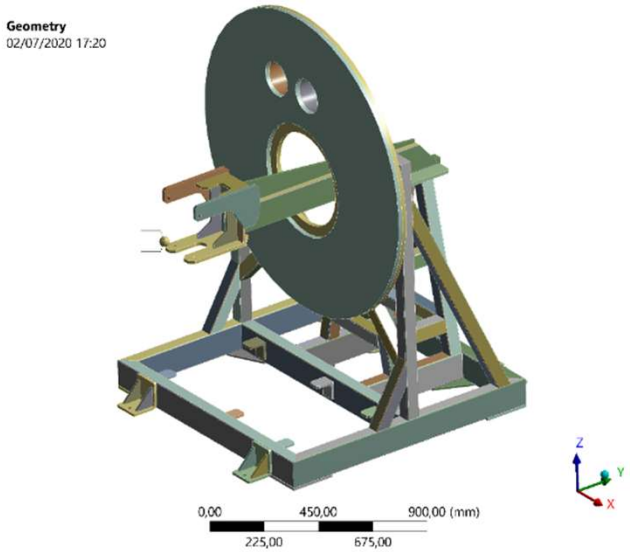

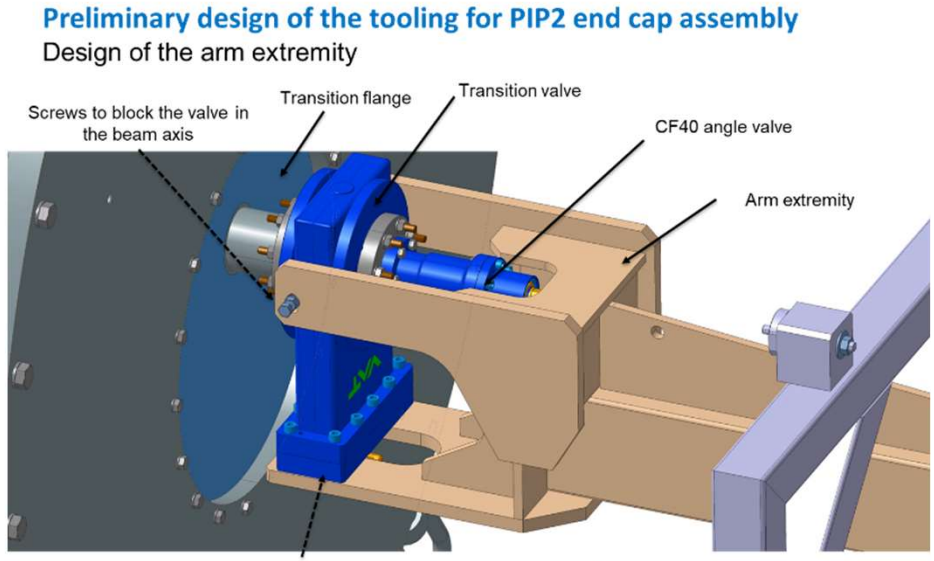

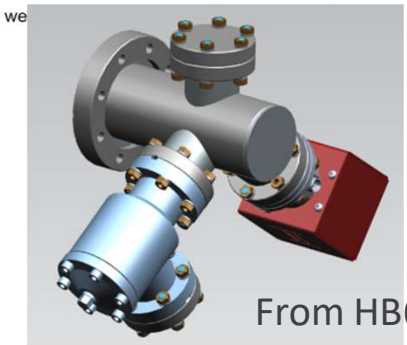

Upstream DN40CF valve is here in the tooling

Tool has been modified to avoid collision with DS weldment manifold

Phase 4: Work Station CLOsure

The Strongback+coldmass in vacuum vessel is moved away from the rails system and the cryomodule is completed.

- **top hat assembly**
  - see presentation PDR-LB650-D1-09_Thermal_Shield

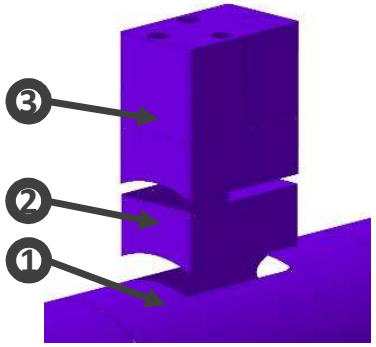

- **Side port**
  - Thermal

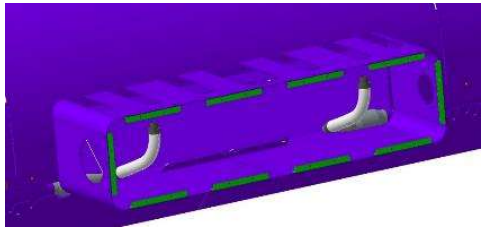

  - Magnetic shield 2205035_Assy_Side_extension_Mag-shield
    - 2205031_Side_extension_port_Baffle
    - 2205035_Side_extension_Mag-shield_encap

- **all flanges closure**

Concluding Remarks

Summary

- Cryomodule main assemblies and sub-systems are well understood
- Existing tools need to be interfaced to LB650 cavities or module components
- Work Stations and infrastructure's equipments are well define and in operation
- Main phases have been identified

Further work

- In detailed assembly process (on going work)
- Phases refinement optimization to balance the workload on different work stations
- QA/QC need to be addressed (RF control, leak checks, sensors and piezo measurements, if needed RX)

Detailed explanation of some assembly steps

2302002_Assy_cavité post

- 2303000_Assy_C_1-REF and
- 2303000_Assy_C_2-REF :

assembled at the workstation SPA phase 2

- 2302001_Cavity_post_V2 :

from the manufacturer assembled
at the workstation SPA phase 1bis

- 2301000_G11_Post :

assembled in our workshop
Then at the workstation SPA phase 1bis

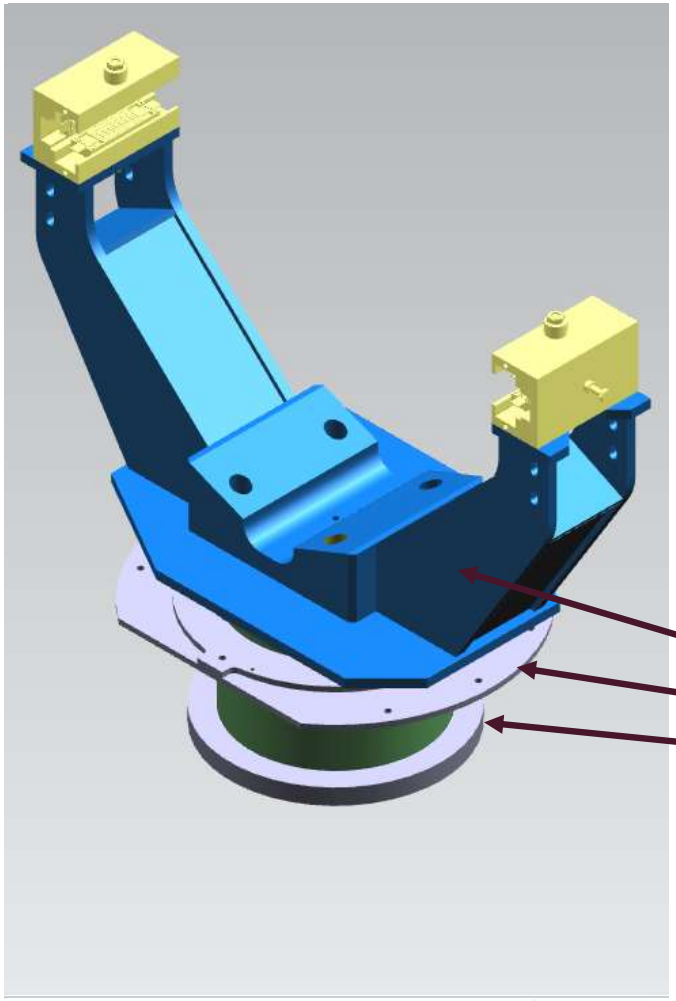

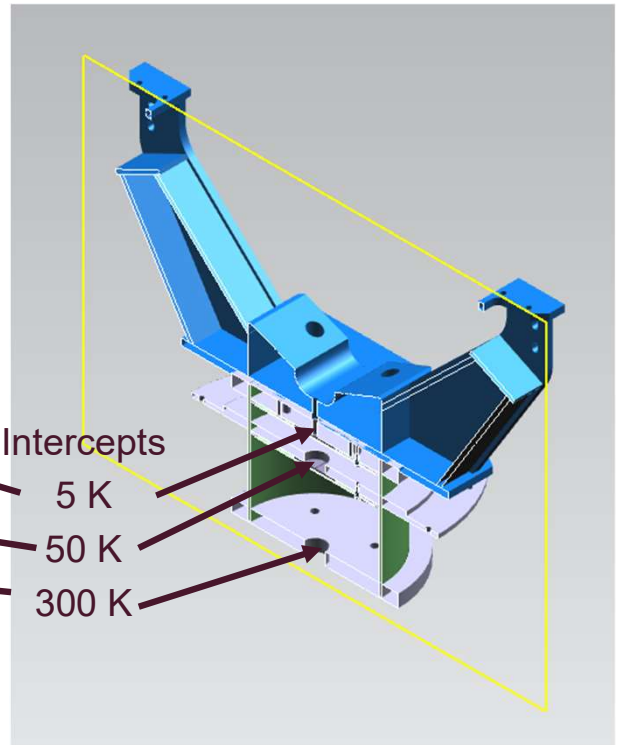

phase 1 : SPA WS

- Studs are assembled to the rail
- Strongback segment are positioned on the studs
- Strongback segment are assembled together
- Studs are locked to the rail
- Lower part of magnetic shield
- The G11 support are set up on the strongback
- The bottom part of the thermal shield sit on the G11 support posts
- 30 layers of MLI are around the thermal shield.
- Cavity_post are assembled
- Thermal straps are connected to 50K intercepts

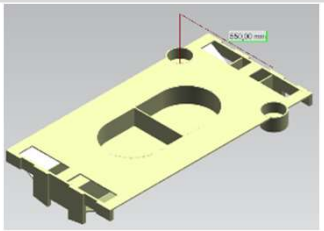

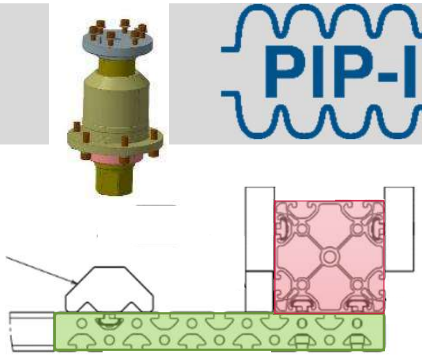

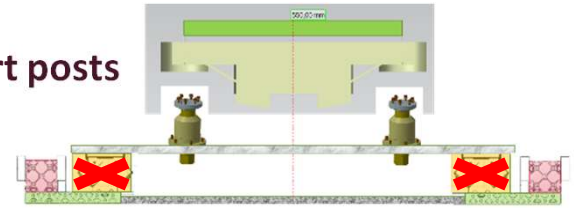

LB650 screws for segment assembly are not implemented yet

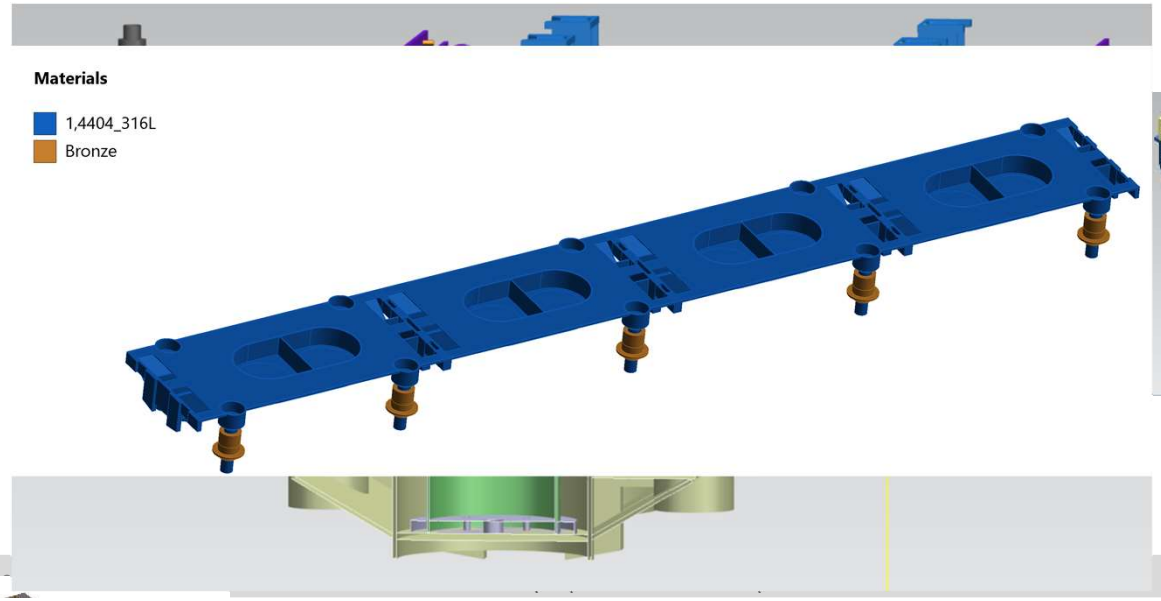

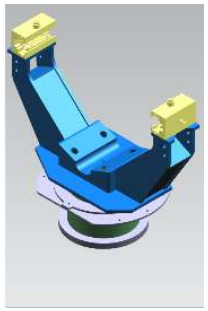

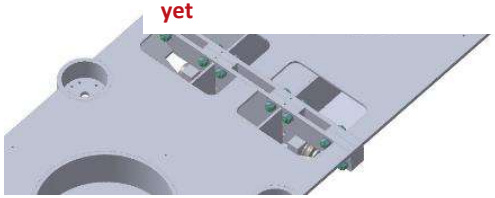

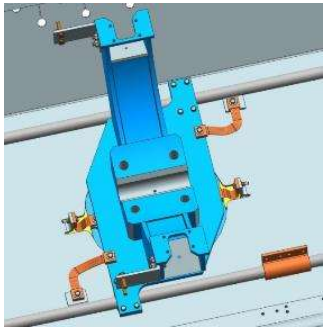

Thermal straps on the cavity post

phase 1 in ISO4 and phase 1bis/1ter on MAF

In the clean room ISO4 the beam line is assembled. (See next presentation for detail of phase 1 ISO4)

- **The beam line roll out of the CR**

1 bis

- **The cavities are kept under vacuum till the end of welding and leak check of the Helium circuit;**
- **After the 2-phase helium pipe and cool down line welded to the cavities, a leak test will be done.**
- **Then beam line is back filled with Nitrogen.**

1 ter

- **Then we install the tuner on the cavities**
- **the magnetic shield will be set up on the cavity.**
- **Then all cryogenic lines and cavities will be covered by MLI, 10 layers.**

phase 1 bis and ter : CRY & SPA WS

- **Bring the Vacuum vessel to the WS**
- **Warm magnetic shield assembly in the vacuum vessel**
- **Alignment of the vacuum vessel to the rail system**
- **Levelling of the strongback assembly**
  - Monitor with Laser tracker,
  - Adjust with the studs
  - The reference is located on the pillars supporting the strongback

Animated assembly

Thank you

2021 march the 9th

Modules are like onions.

Donkey: They stink? Shrek: Yes. No. Donkey: Oh, they make you cry….

No. Layers. Onions have layers. Cryomodules have layers. Onions have layers. You get it? We both have layers.

DE LA RECHERCHE À L'INDUSTRIE

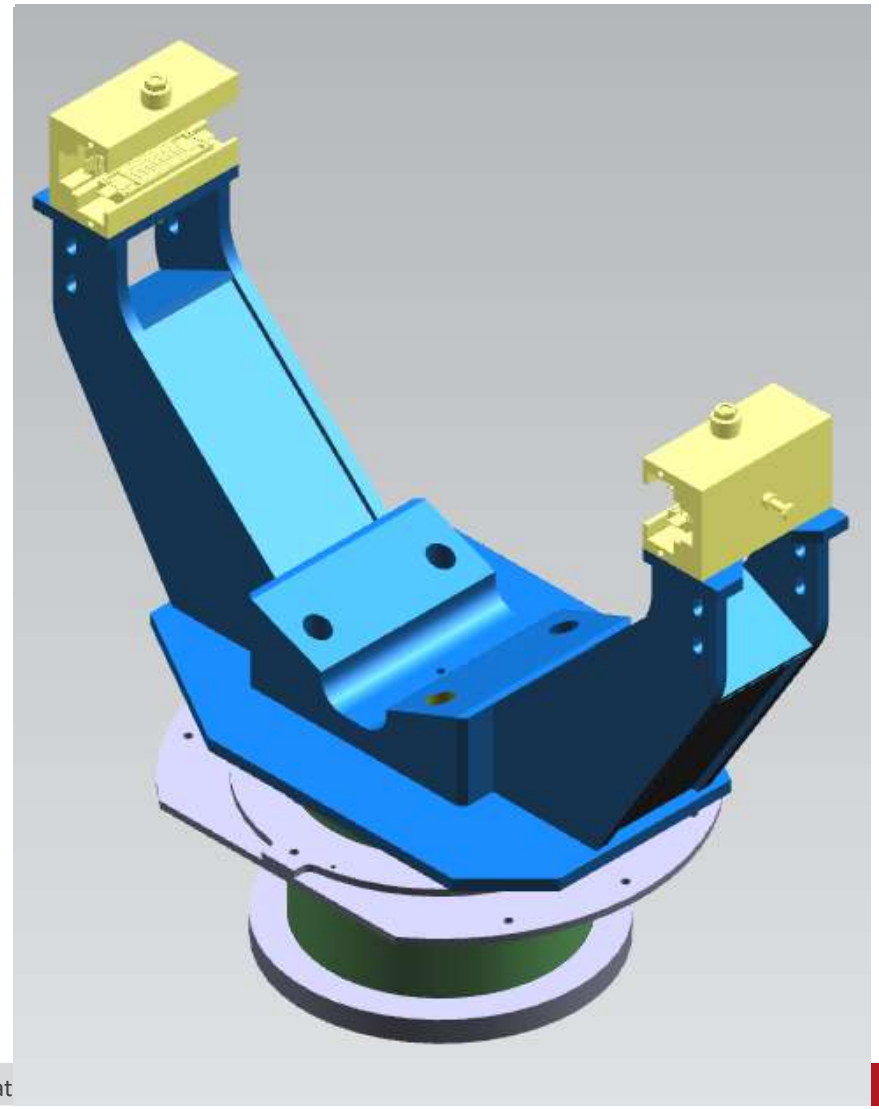

Strongack completed : multi layer structure!

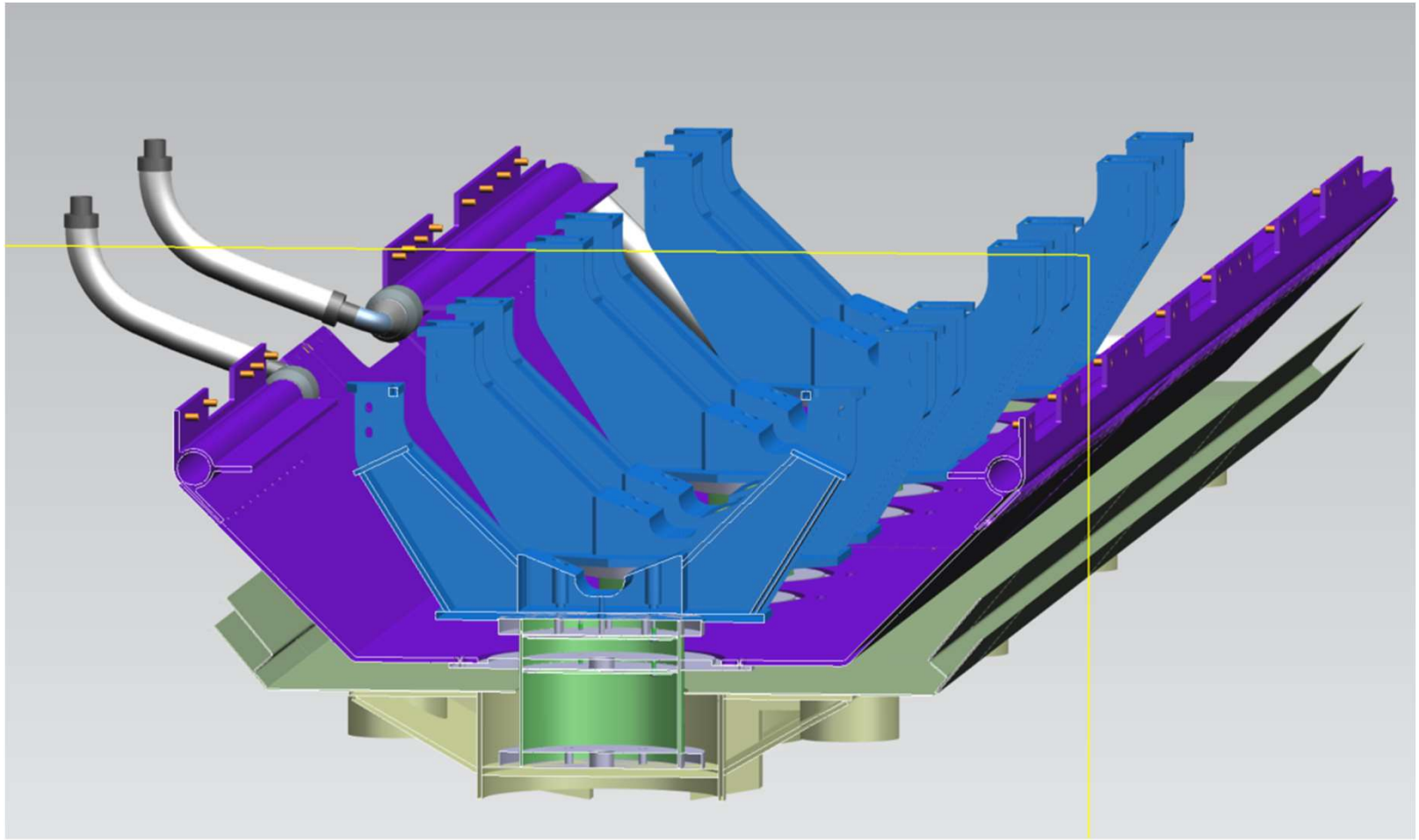

Building 124 rail systems (1/2): north to south

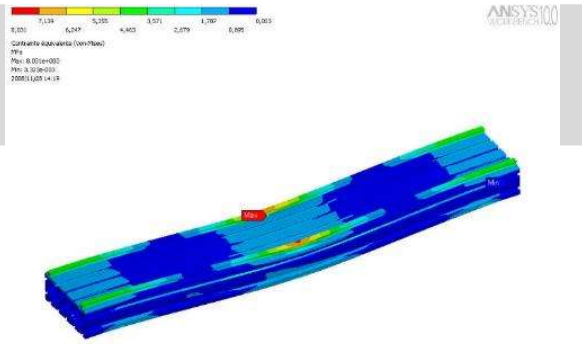

Two independent system at 1860mm

ELCOM aluminum cantilever + 2 SS profiles: 2 x 46 m

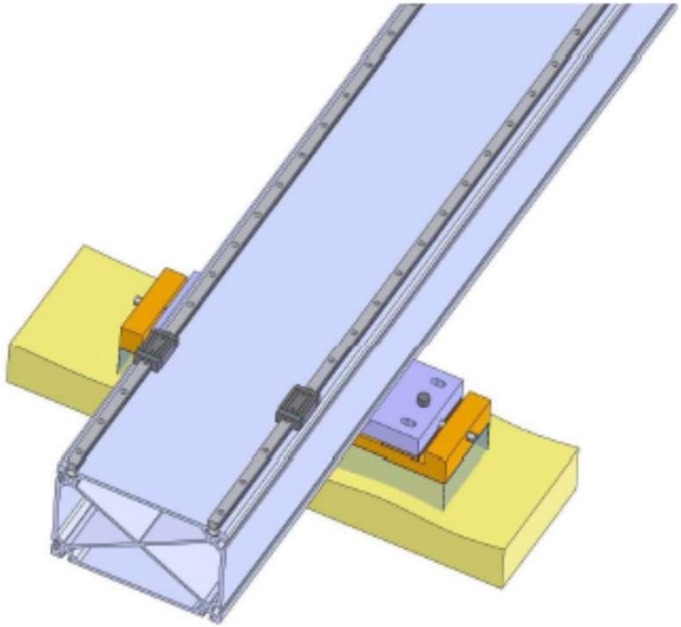

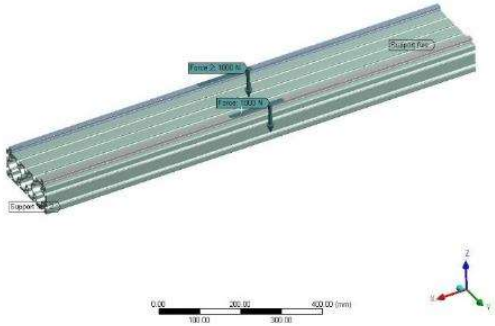

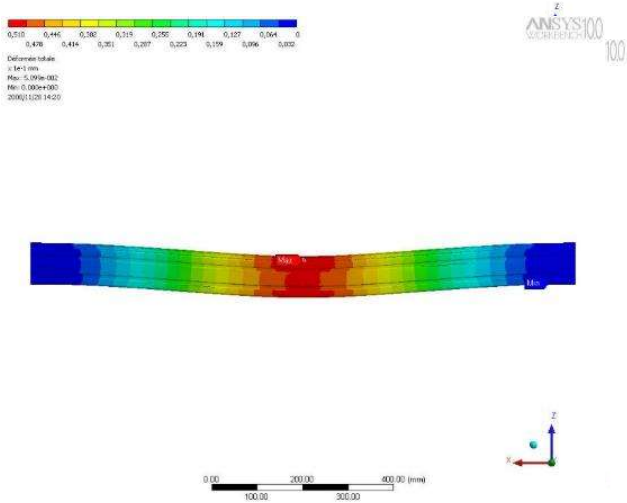

- Aluminum cantilever Profiles ELCOM 240x160 8EN (6 m long): overall length 46 m.
- Rails (2 meters) and carriage ELCOM 4E-15 avec bride de fixation : 2 rails for one cantilever
- Aluminum cantilever is « hanging » between 2 yellow support casted after the leveling

- Loading **2 x 1 000 N** at the worst place (between yellow supports distant from 1.8 m)
- **maximal deformation 0.5 mm**

Building 124 rail systems (2/2): east-west

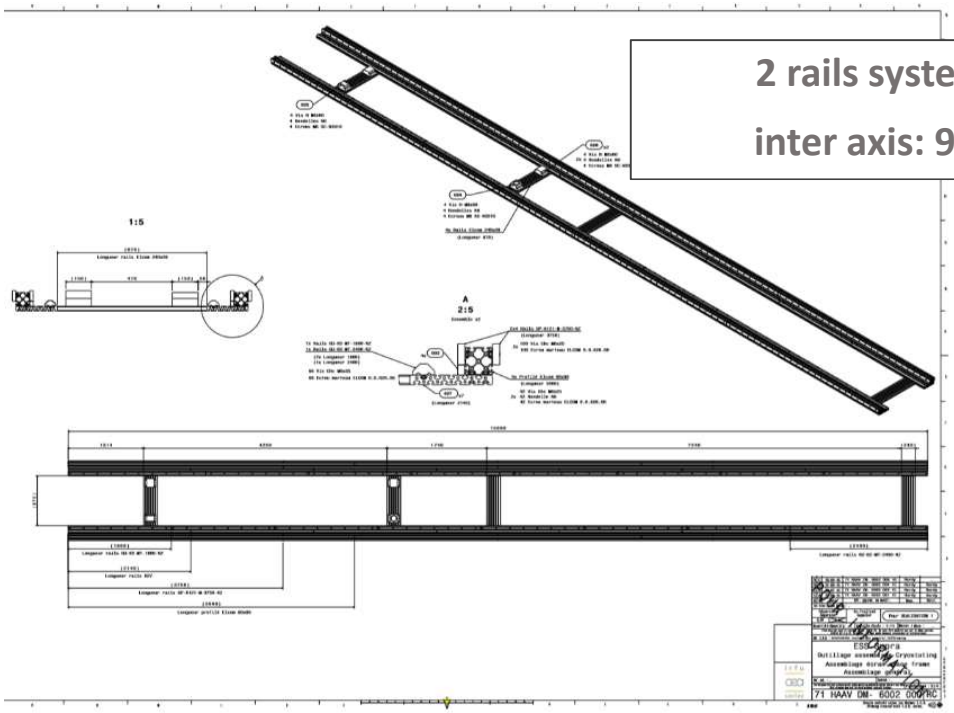

2 rails system NADELLA 15 m

inter axis: 950 mm/1270 mm

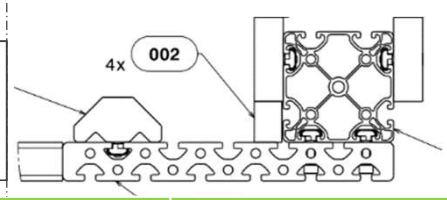

Inner rail	Outer rail
Inter rail dist. 950 mm	Inter rail dist. 1270 mm
SS rail GU-62-MT-1800-NZ Triangular carriages	SS rail GP-6121-M-3750-NZ Rectangular carriages
Aluminum profile Elcom 240x40	Aluminum profile Elcom 80x80

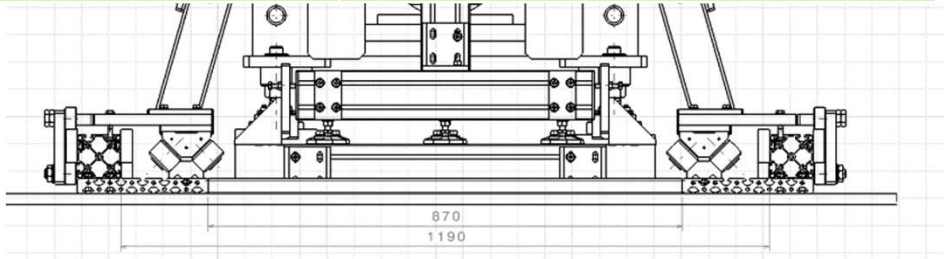

- Plan **Elcom** P17-10253-010-003.pdf**:**
- **Overall length: 15 m.**
- **Rails and carriages NADELLA:** see table
- **Casted to the ground: No deformation → « infinitely stiff »**

- **Possibility of central supports on casted to ground traverses : precise and no variability**

▶ **Strongback on the inner rail**

▶ **Vacuum vessel on the outer rail**

Vacuum vessel to rail interfaces

- Inter axis 366-534

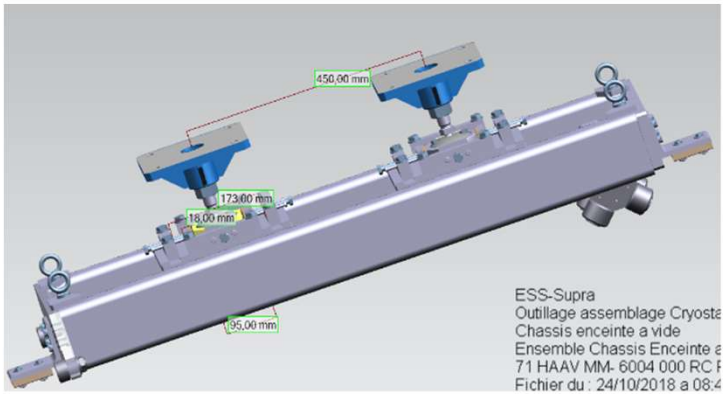

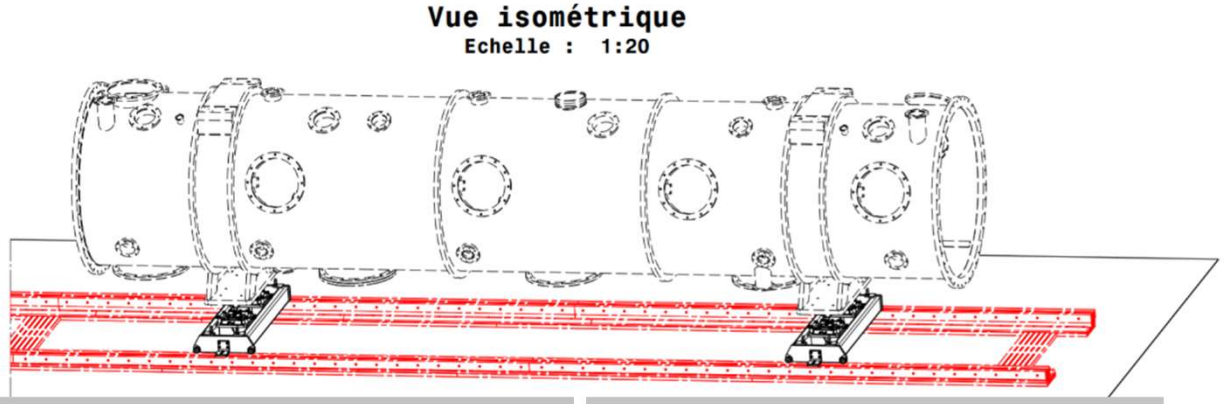

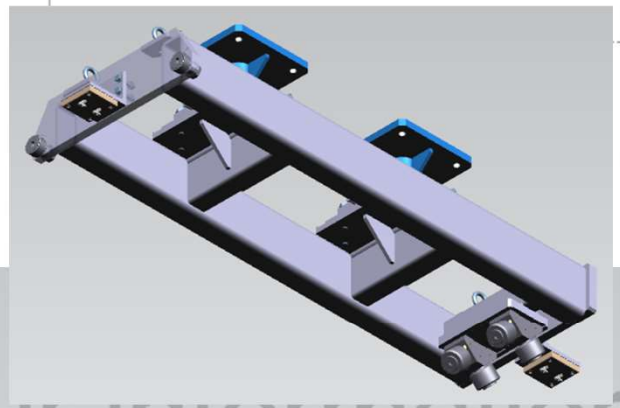

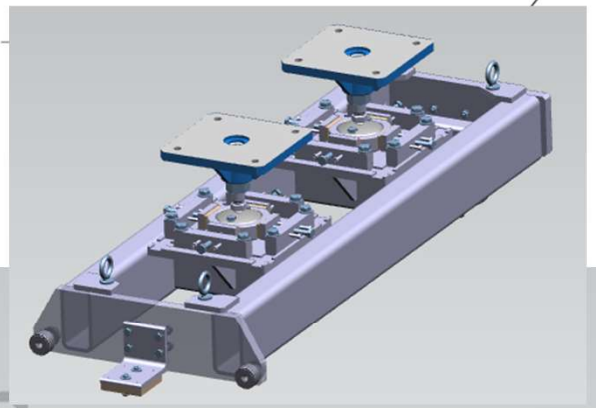

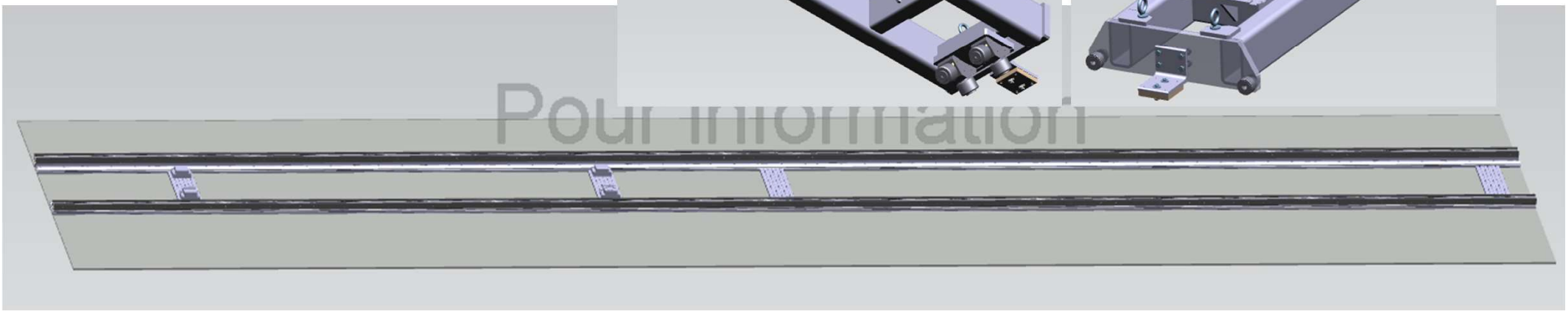

Pour information

Studs, wheels and straps not yet in LB650 model

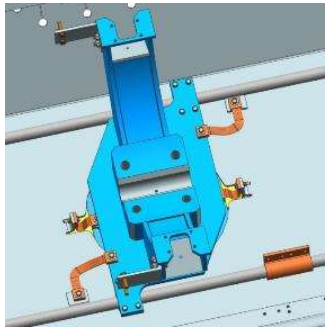

Thermal straps on the cavity post

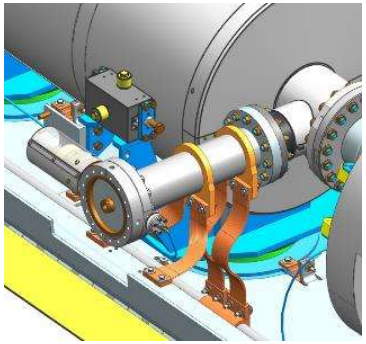

Thermal straps on the coupler

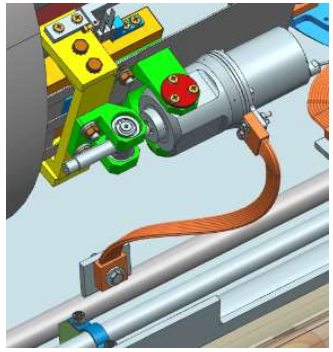

Thermal straps on the tuner motor

Figures taken from the presentation "Cryogenic Lines & Heat Loads" given at the Final Design Review of the HB Prototype Cryomodule, July 2020

How to fix studs to the rail?

to scale

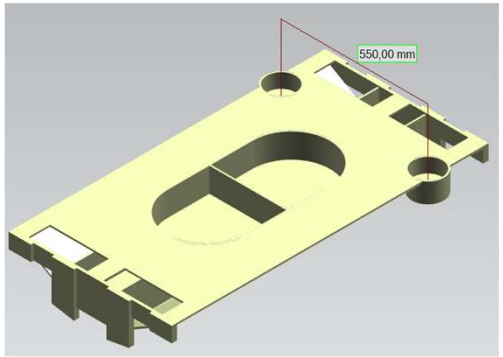

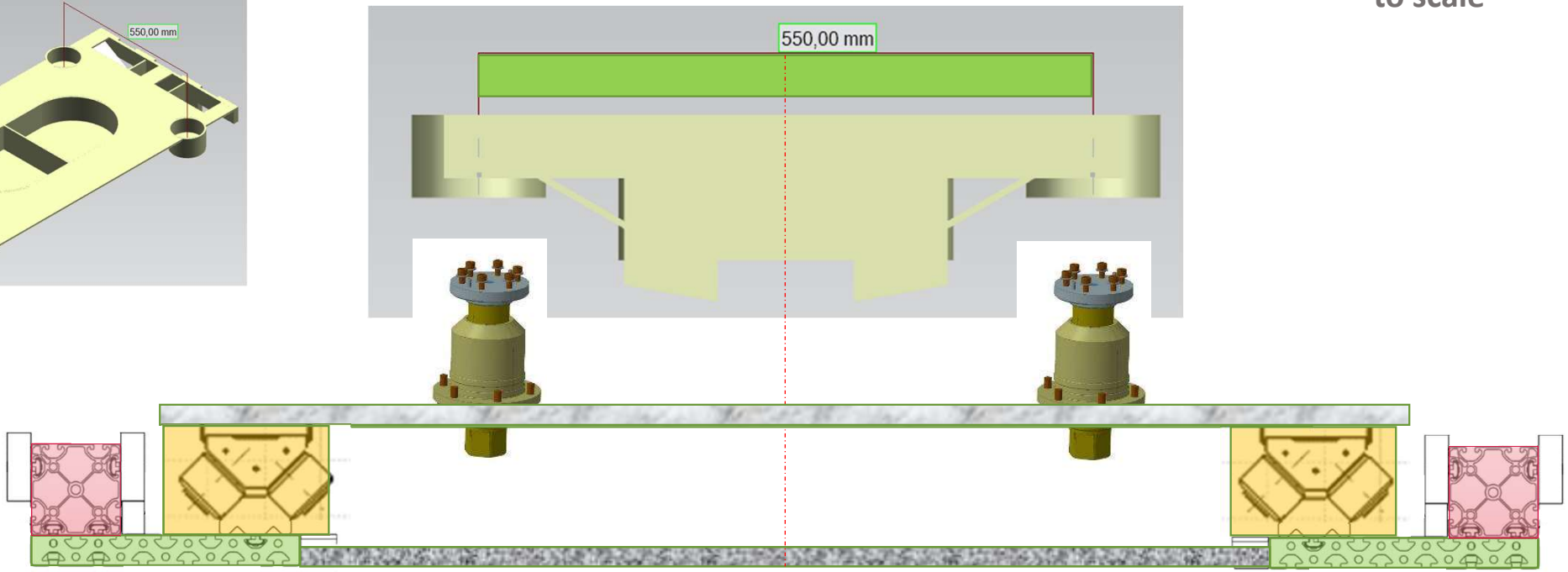

Does the string fits under the red girder?

6400-(130-20)*2=6100

- **YES**

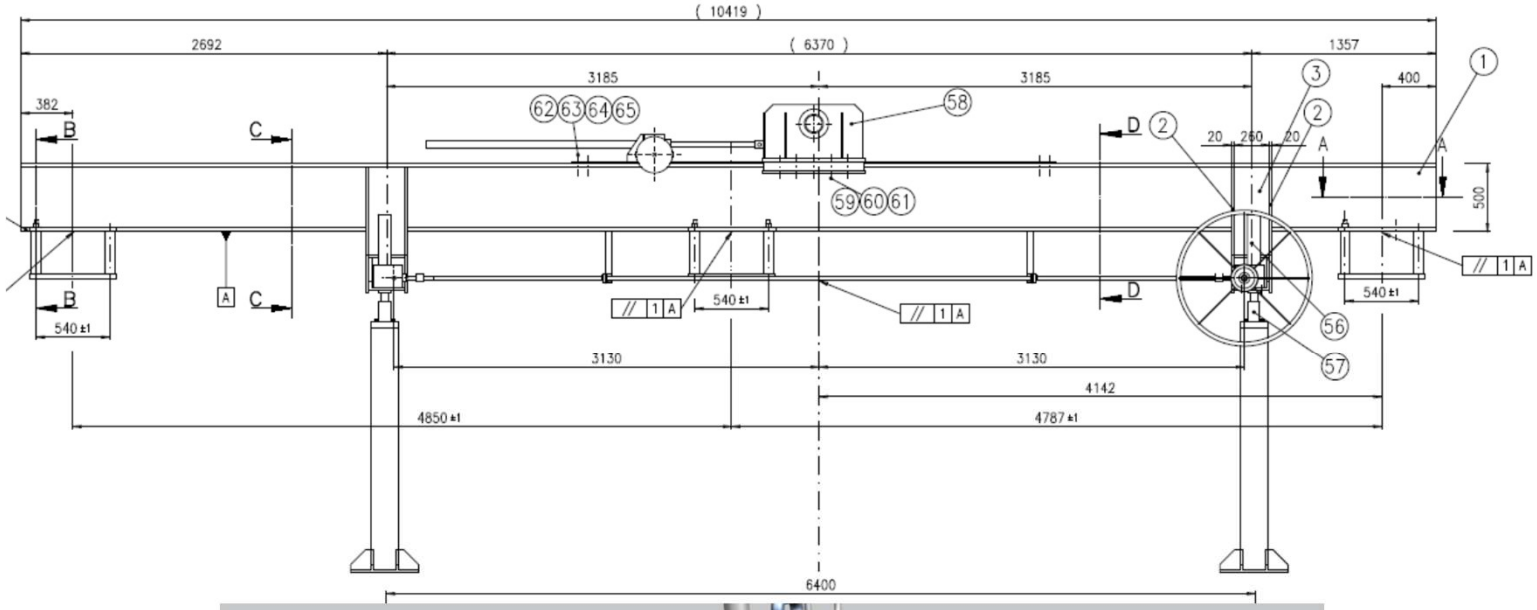

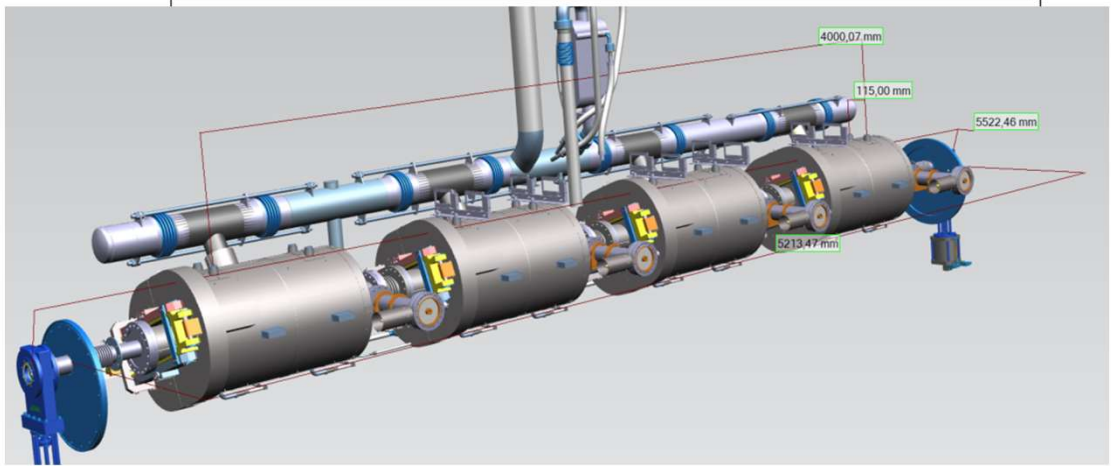

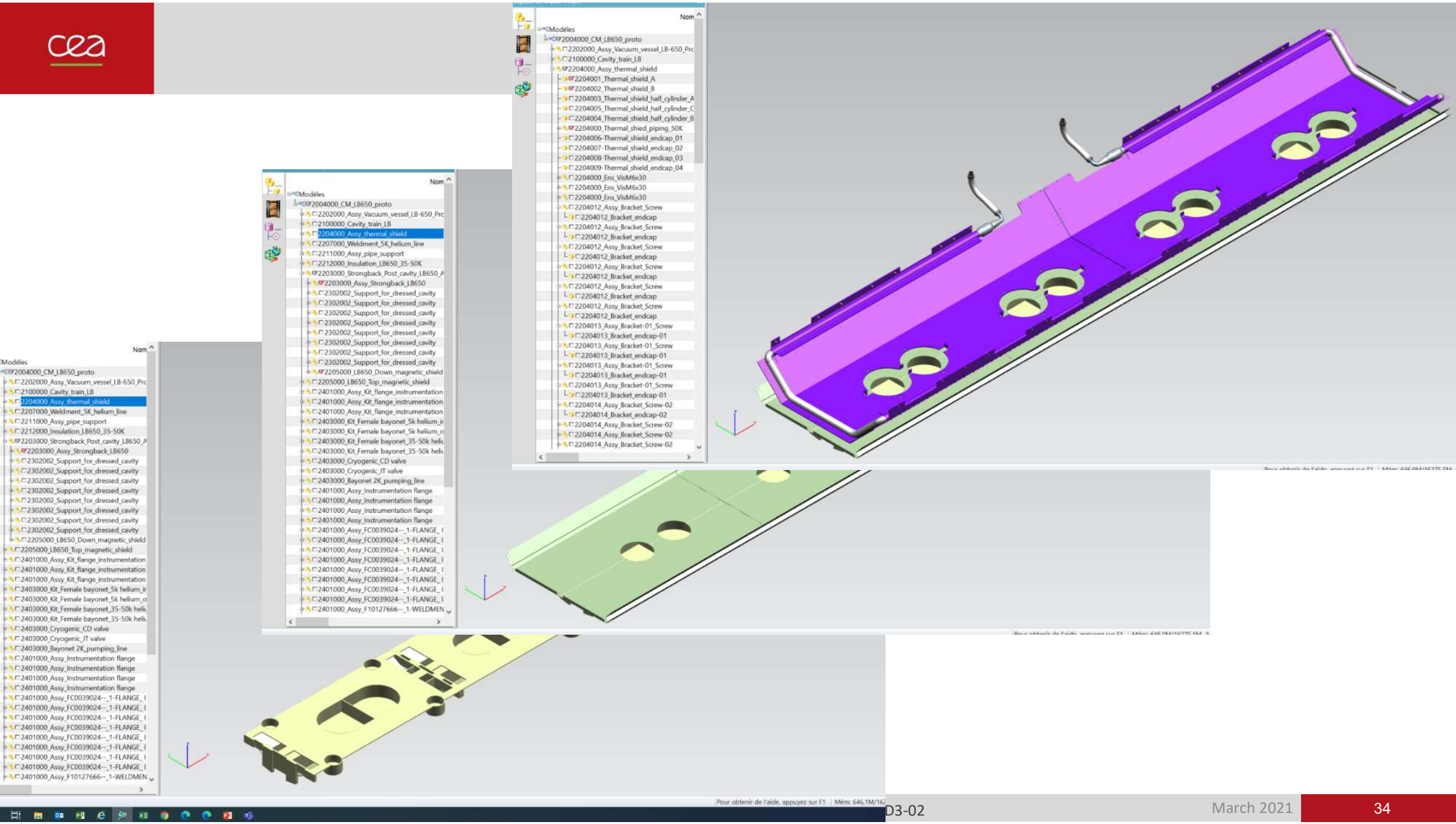
Nom
Modèles
2004000_CM_LB650_proto
2202000_Assy_Vacuum_vessel_LB-650_Prc
2100000_Cavity_train_LB
2204000_Assy_thermal_shield
2204001_Thermal_shield_A
2204002_Thermal_shield_B
2204003_Thermal_shield_half_cylinder_A
2204005_Thermal_shield_half_cylinder_C
2204004_Thermal_shield_half_cylinder_B
2204000_Thermal_shied_piping_50K
2204006-Thermal_shield_endcap_01
2204007-Thermal_shield_endcap_02
2204008-Thermal_shield_endcap_03
2204009-Thermal_shield_endcap_04
2204000_Ens_VisM6x30
2204012_Assy_Bracket_Screw
2204012_Bracket_endcap
2204013_Assy_Bracket-01_Screw
2204013_Bracket_endcap-01
2204014_Assy_Bracket_Screw-02
2204014_Bracket_endcap-02
2207000_Weldment_5K_helium_line
2211000_Assy_pipe_support
2212000_Insulation_LB650_35-50K
2203000_Strongback_Post_cavity_LB650_A
2203000_Assy_Strongback_LB650
2302002_Support_for_dressed_cavity
2205000_LB650_Top_magnetic_shield
2205000_LB650_Down_magnetic_shield
2401000_Assy_Kit_flange_instrumentation
2403000_Kit_Female bayonet_5k helium_ir
2403000_Kit_Female bayonet_5k helium_o
2403000_Kit_Female bayonet_35-50k heli
2403000_Cryogenic_CD valve
2403000_Cryogenic_JT valve
2403000_Bayonet 2K_pumping_line
2401000_Assy_Instrumentation flange
2401000_Assy_FC0039024--_1-FLANGE_I
2401000_Assy_F10127666--_1-WELDMEN
Pour obtenir de l'aide, appuyez sur F1
Mém: 646,1M/162

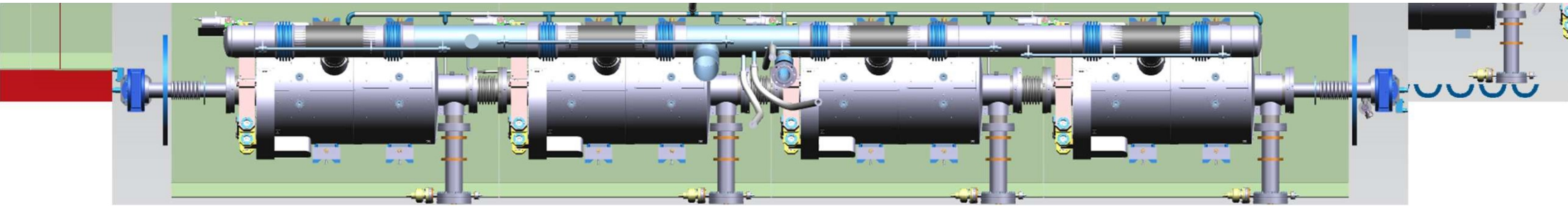

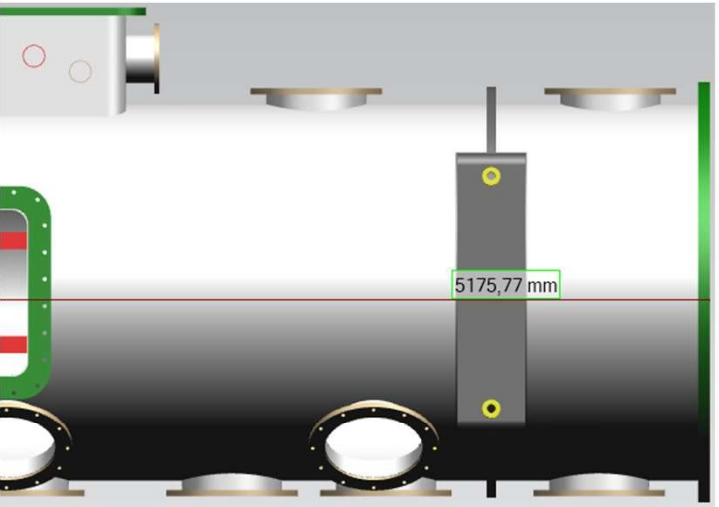
5175,77 mm

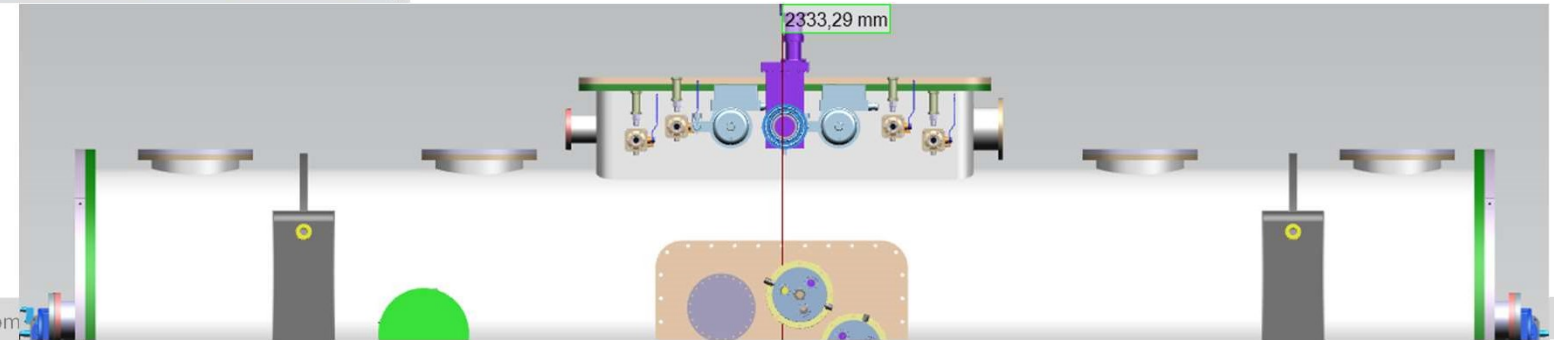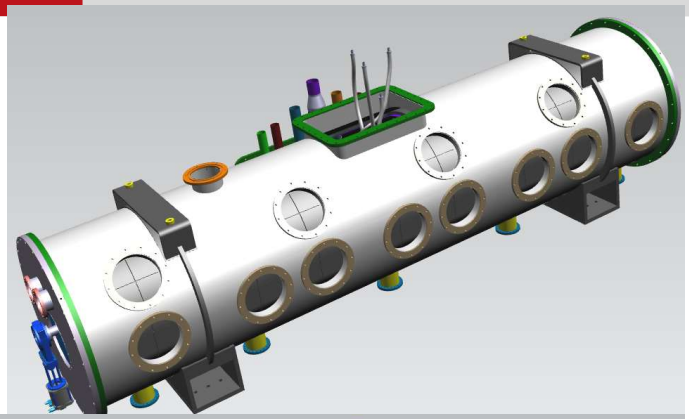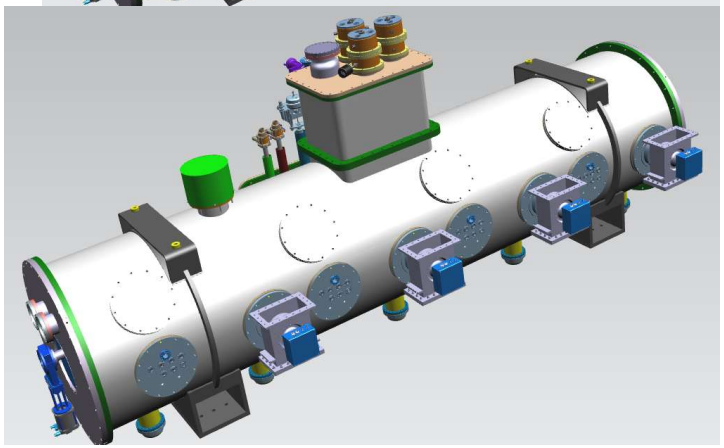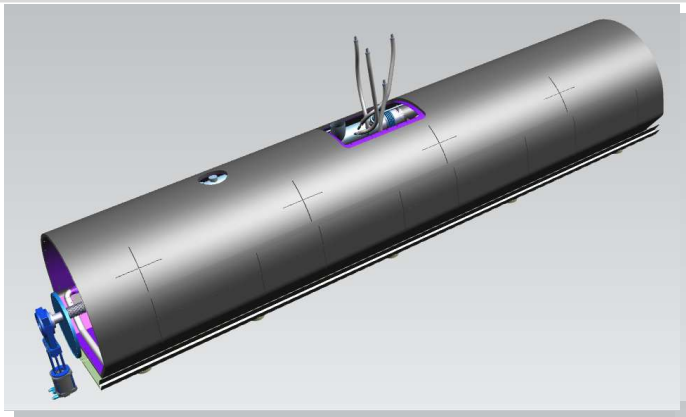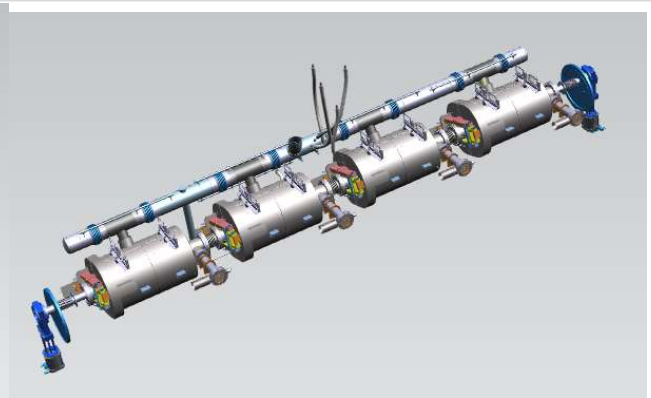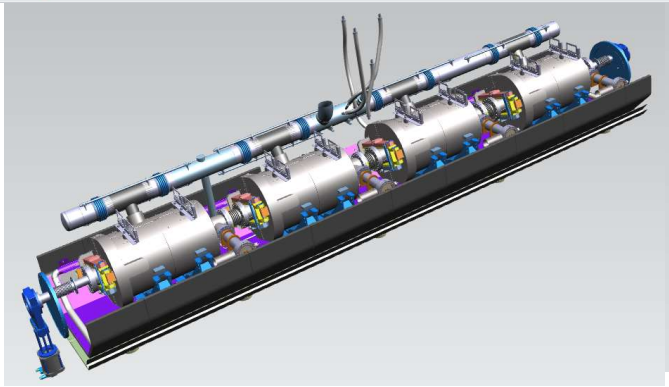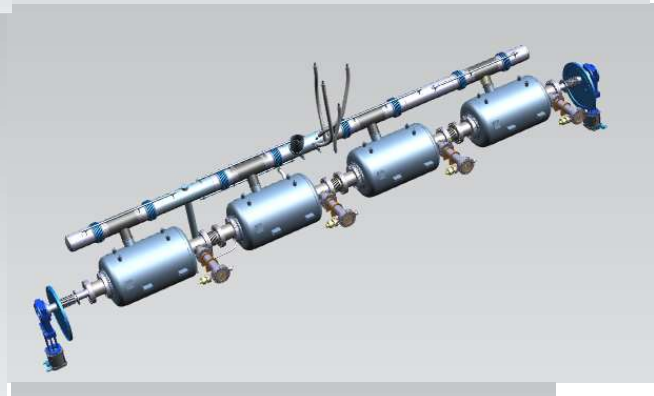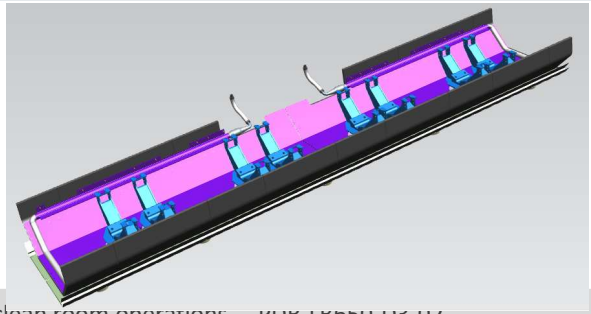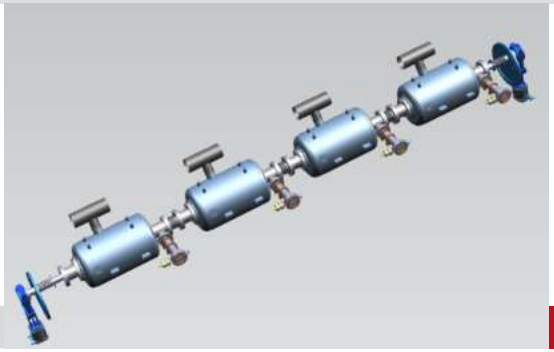
2333,29 mm