DE LA RECHERCHE À L'INDUSTRIE

Beam line assembly and procedures

S. BERRY

Low Beta 650 MHz Cryomodule – Preliminary Design Review – March 2021 the 10th

Outline

- **Description of the 650 MHz Low Beta cavity string overview**
  - For different components :
    - Comparison from actual LB650 3D model to HB650 one
    - Updates to be done or Proposal for minor changes
- **String assembly procedures**
  - Assembly Facility
  - Cleaning Procedures
  - Cavity String Assembly Procedure
  - Nitrogen Purging Strategy
  - In vacuum particles counter
- **Summary**

Description

The Beam line is the assembly **F10xxxxxx** in Teamcenter.

4 cavities β = 0.61 with coupler,

3 interconnection assemblies (bellows),

Both beam pipe end assembly are identical : 2206001_Beam_pipe_end-entrance,

Gate valves : FC0071992-- _1-GATE VALVE_ ALL-METAL_ 63MM

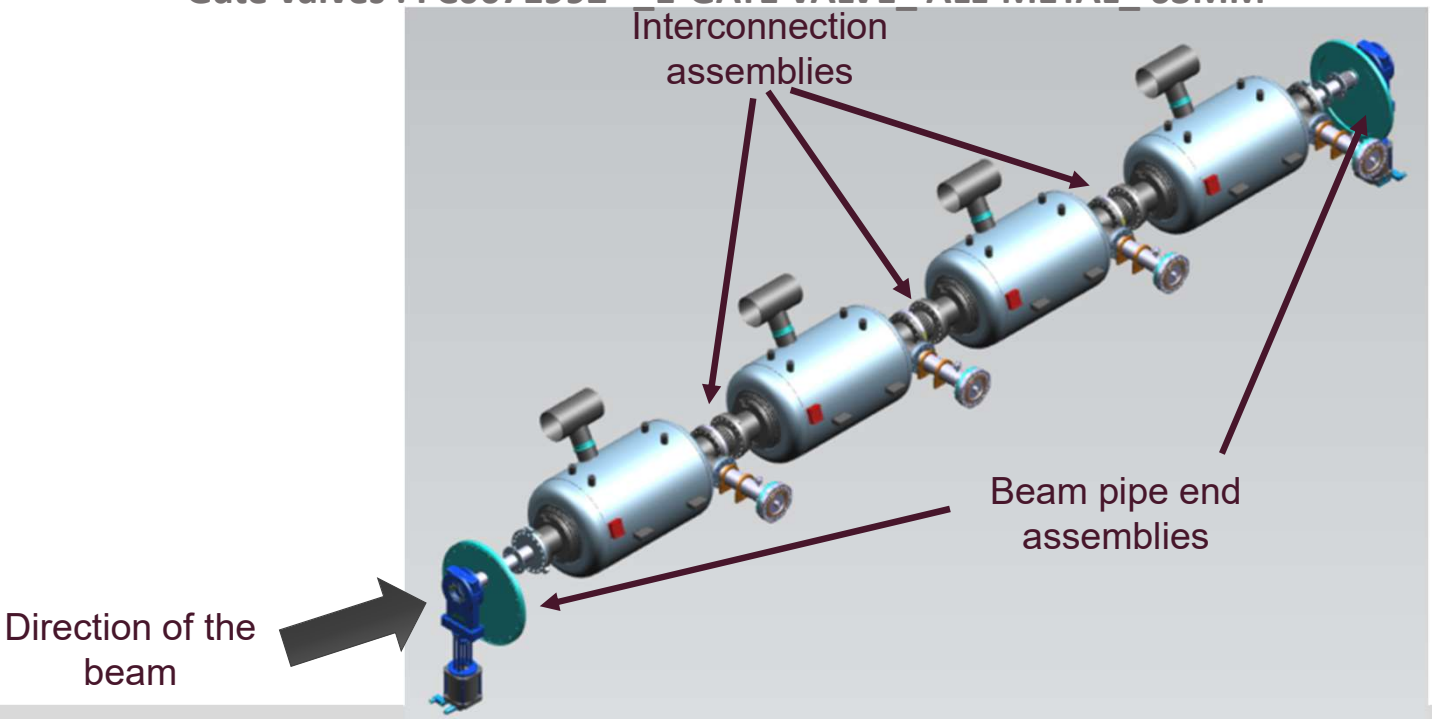

Cavities β = 0.61

- **Positions of the cones in the beam flanges is under discussion**

- **Handover conditions: under vacuum (Tuner side : split rings)**

- **a configuration with two valves assembled at the cavity manufacturer**
  - This is a must to maintain cavity performance (planned for SARAF project)

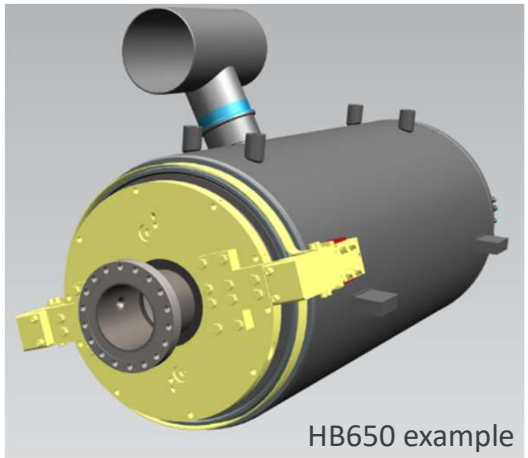
HB650 example

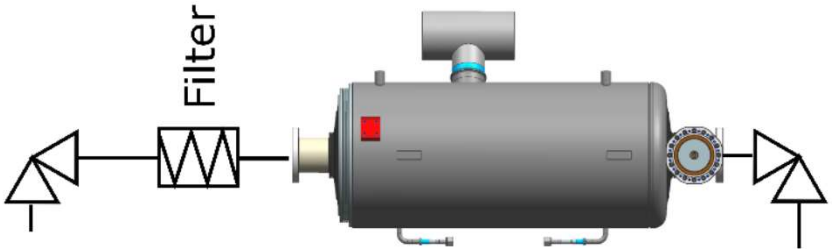

Couplers

- **After conditioning in FERMI Lab, vacuum parts of the couplers will be assembled in the clean room on a transport manifold (6 items, max 8), kept under vacuum all the time.**

- **Air parts will be shipped separately.**

LCLS-II example

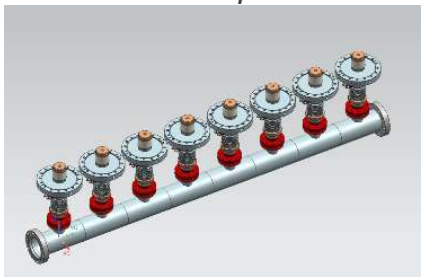

Coupler storage manifold (LCSL-II)

- **After the assembly to the cavity, a support of the coupler will be connected to the cavity tank or to the cavity post** (because anchoring of the cavity helium tank to the girder is needed before removing the posts)

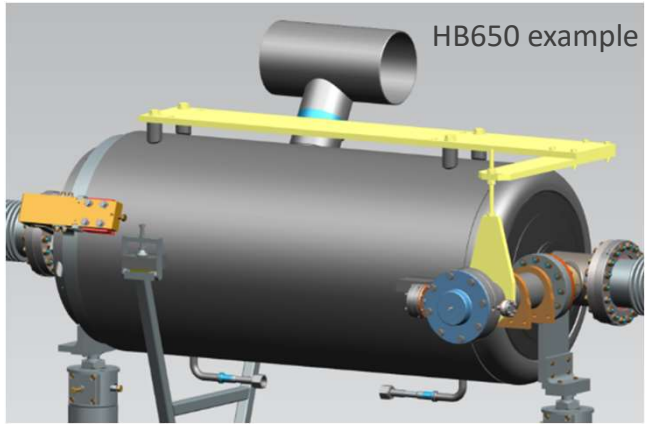

Interconnection assemblies

3 interconnection assemblies (Bellows have rotatable flange on one side)

reference in the model : F10132982--_1-BELLOWS WELDMENT_ B90 TO B92 CAVITY,

part seems OK

but name doesn't correspond?

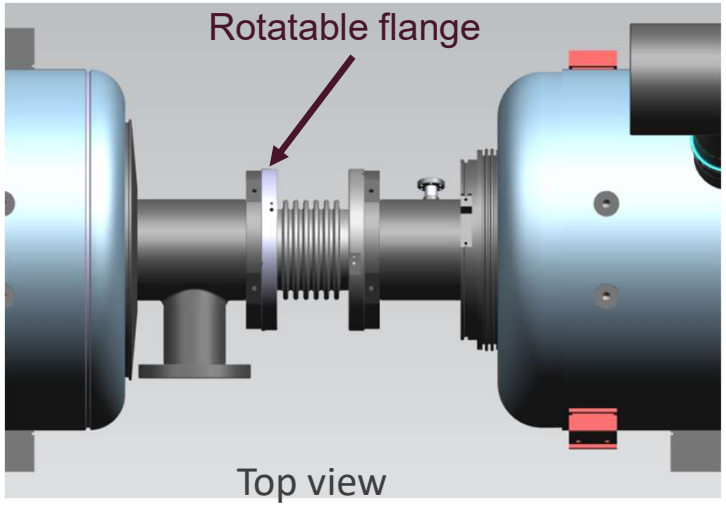

probable mistake in diameters between gasket

and flange on the rotatable side

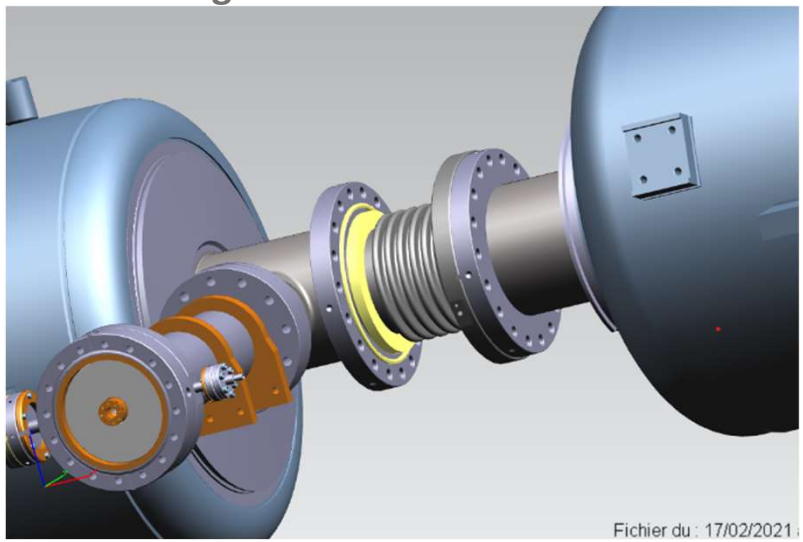

- **assembly process and the position of the rotatable flange are correlated (US or DS)**
- **rotatable flange position have no other assembly constrain**

▶ Check diameters (fixed flange on the rotatable side) vs gasket

Beam pipe end assembly

Both beam pipe end assembly are identical : 2206001_Beam_pipe_end-entrance in the model now,

Recent modification to include burst disk need update

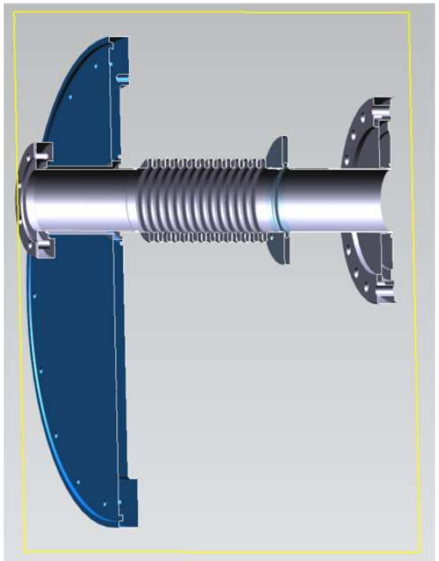

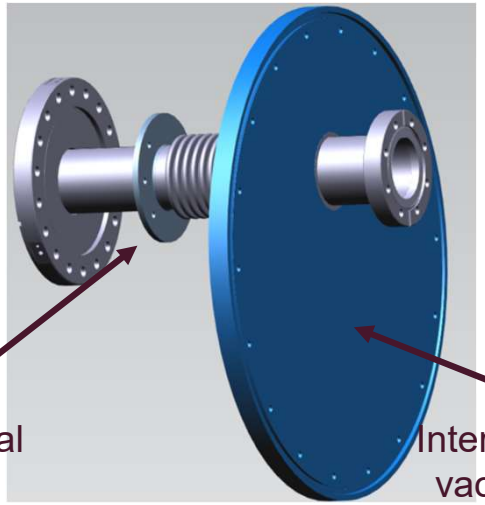

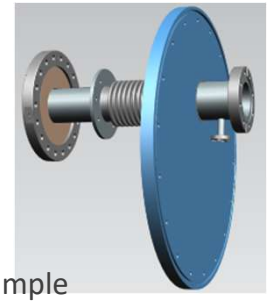

HB650 example

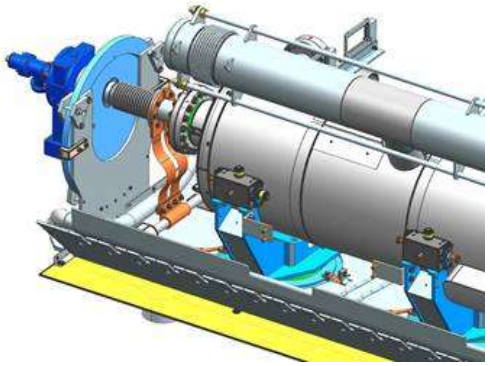

- **Use of 2 thermal straps on intercept directly connected to 5 K cryogenic lines**

▶ **Design need to be update with the Burst Disk** (to connect F10150129--_1-KIT_ HB650 BEAM PIPE BURST DISK_MODEL)

Gate Valves

Both are identical : FC0071992--_1-GATE VALVE_ ALL-METAL_ 63MM

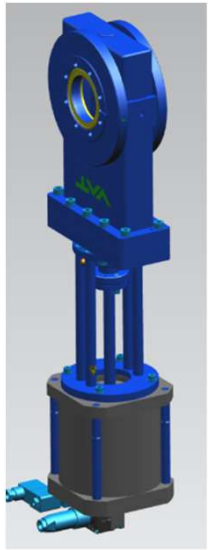

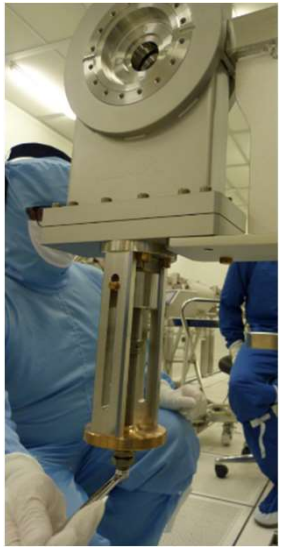

- **Use of manual actuator in the cleanroom instead of the electro-pneumatic actuator**

▶ **ESS design (two designs available VAT and CEA) need to be introduced in the 3D-model**

- **The <u>HB650 3D model</u> shows a gate valve with gauge port on the side**

▶ **LB650 3D model need to be updated ?**

Fasteners

- CF connections of **temporary parts** (pump assy) use SS screws, Silicon Bronze Nuts and **Copper Gaskets**
- CF connections of the **gate valves** (bore holes) use **SS studs**, Silicon Bronze Nuts and Copper Gaskets
- other connections (**cold beam line**) use SS studs, Silicon Bronze Nuts and **Aluminum Gaskets**

Gate valve pump assembly

Gate valve pump assembly will be connected on one end : **DS or US?** (HB650: DS)

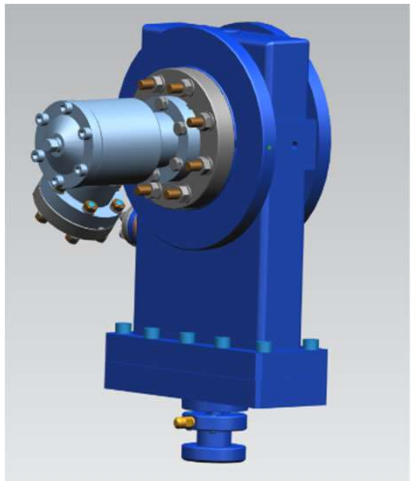

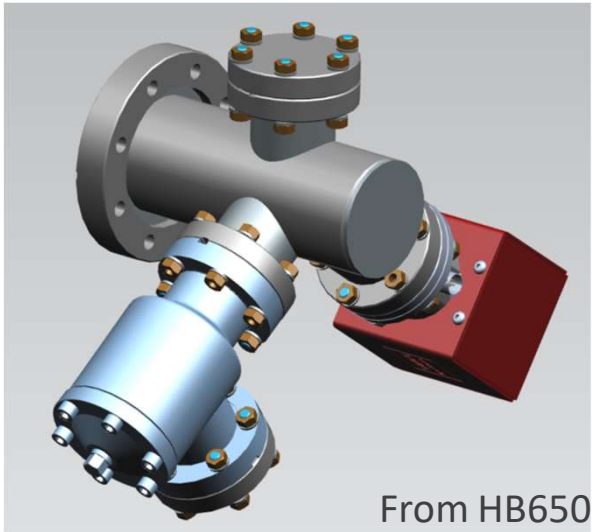

- **CEA plan a different assembly on the opposite side of the pump assembly**

▶ ESS-like design with a DN40CF elbow

- **The possibility to reuse ESS Pump ASSY will be evaluated**

▶ Check if collisions exists along all life cycle

Tools (1/2)

Cavity reception CART

- **Fork lifter and Cart from previous project**
  - XFEL (lifter and cart)

ESS lifter (same)+handling bar

ESS cavity stand for cavity venting

Tools (2/2)

Cavity posts interface

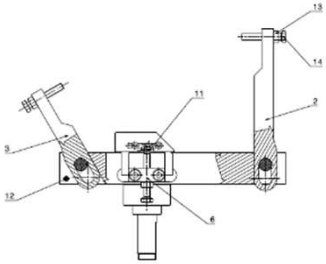

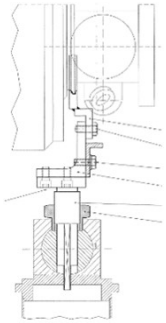

- **To be decided soon:**
  - XFEL like: on tuner side under the helium tank; on coupler side to the transition spool
  - ESS like: on tuner side and coupler side to the cavity flanges (bottom right pictures)
  - HB650 like: on tuner side to the split rings ; on coupler side to the transition spool

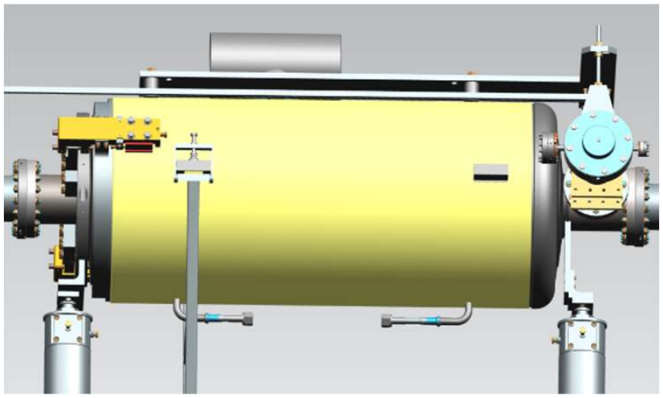

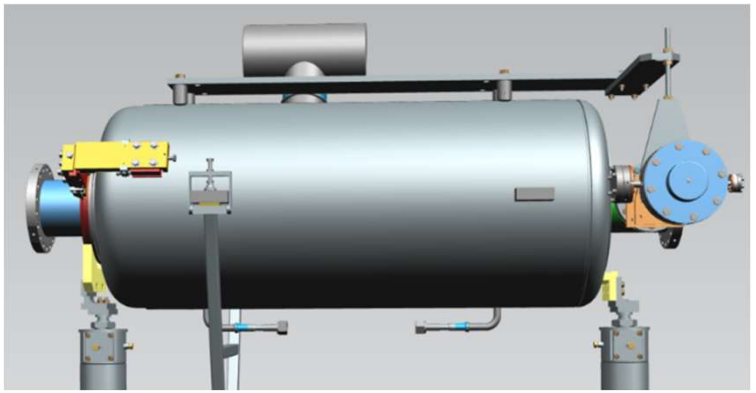

Outline

- **Description of the 650 MHz Low Beta cavity string overview**
  - For different components :
    - Comparison from actual LB650 3D model to HB650 one
    - Updates to be done or Proposal for minor changes
- **String assembly procedures**
  - Assembly Facility
  - Cleaning Procedures
  - Nitrogen Purging Strategy
  - Cavity String Assembly Procedure
  - In vacuum particles counter
- **Summary**

String orientation in the CR

Limitation: rail axis to the door distance: 470 mm

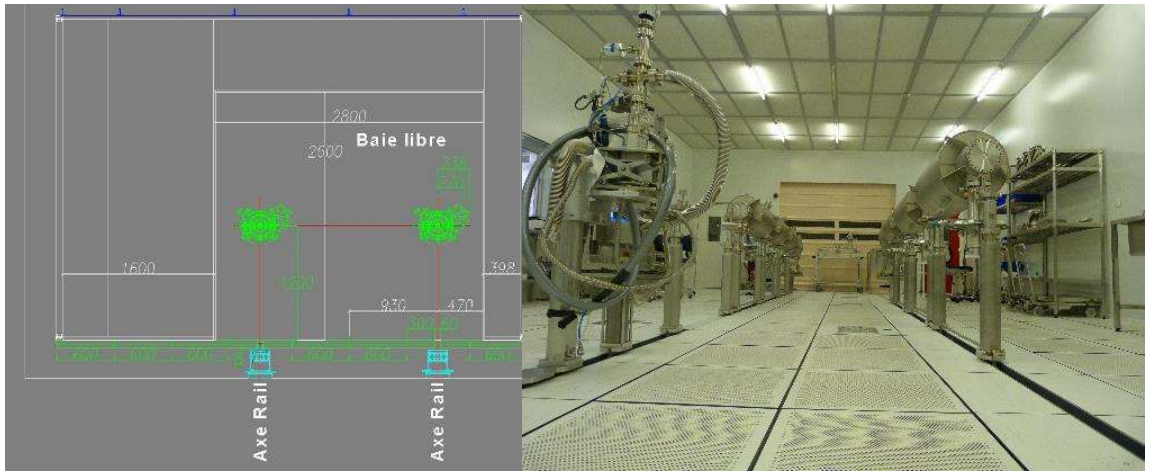

- **Max transverse dimension ~495.18 mm for couplers**

  couplers should point to the inter-rail space

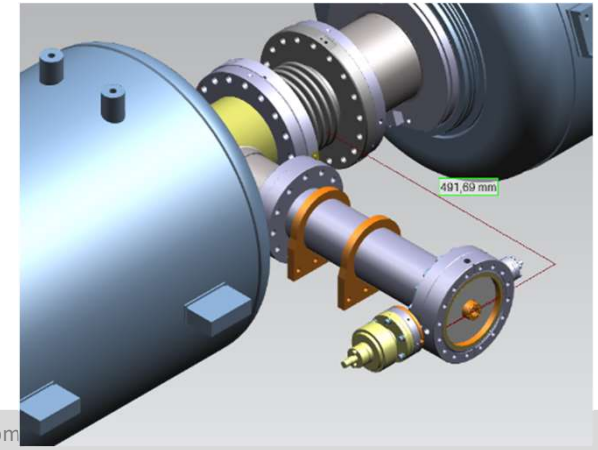

Assembly Facility : Bldg 124 North (200 m²)

Drawing and pictures

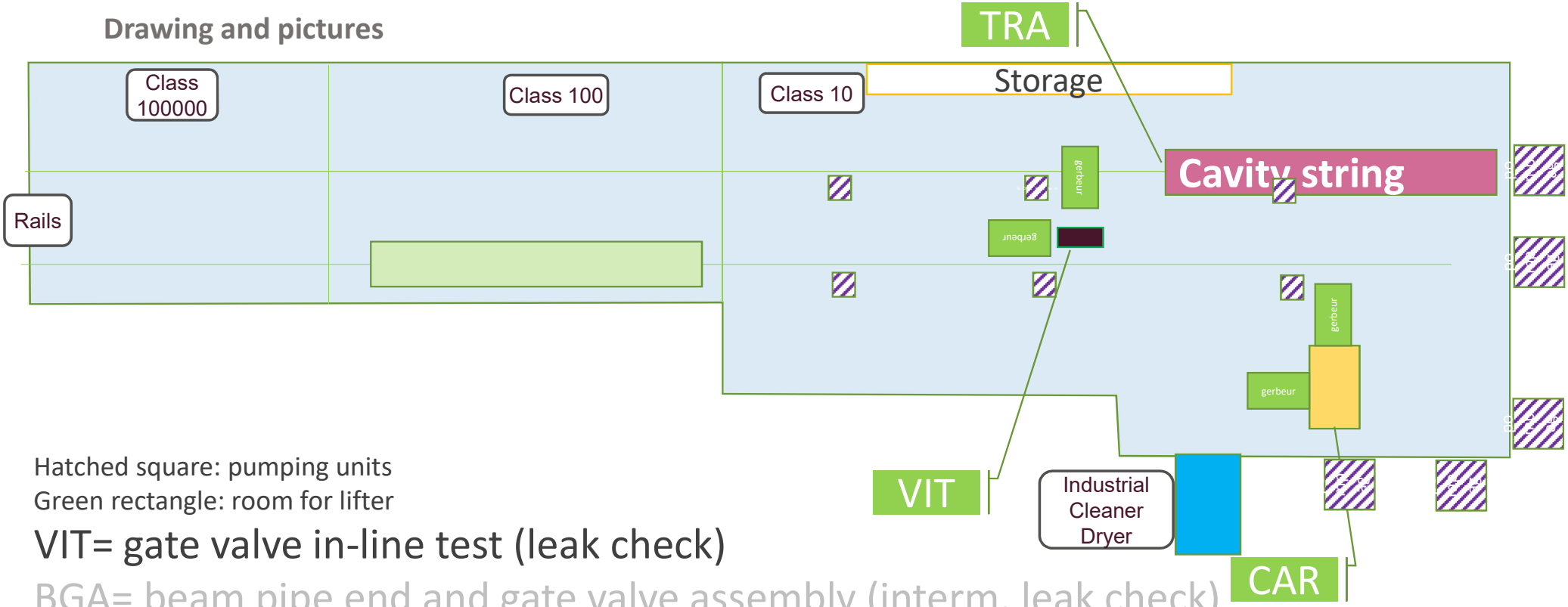

Hatched square: pumping units
Green rectangle: room for lifter

VIT= gate valve in-line test (leak check)

BGA= beam pipe end and gate valve assembly (interm. leak check)

CAR=Cavity reception and venting

TRA= cavity string and coupler assembly

Assembly Facility: pumping/purging

Slow venting (3L/min) slow pumping (except near to rail units)

In the clean room : 11 pump/purge points from 8 independent units
5 around the CR (+1 in the Hall): semi automated, mass flow control, remote, archiving data; RGA, ref leak…
3 from cellar (PP) to rail (TMP) in the middle of the CR (Y shape piping=> 6 points): Modular plug&pump, leak detector

3 items

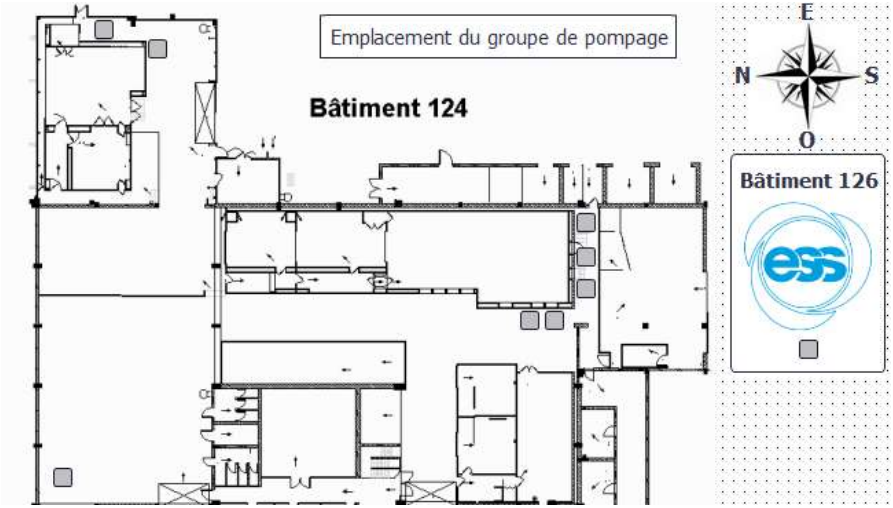

5 items

3l/min might change depending on “vacuum particles counter” tests

Cleaning Procedures

2 Descriptif des opérations

Irfu cea B&S International France	Procédure de lavage par BELIMED : Chargement soufflets et transitions ESS	Référence : BSF-ASS-LAV-BELIMED-03-V1.1

Procédure de lavage et de chargement des soufflets et d'une transition

Cette fiche d'instructions définit les opérations de lavage en BELIMED, pour des soufflets et une transition.

FICHE D'INSTRUCTIONS OPERATIONNELLES				
	B&S		CEA	
	Rédigé par	Vérifié par	Vérifié par	Approuvé par
Fonction	B&S –Monteur Salle Propre	Chef de Projet	Ingénieur Système	Responsable marché assemblage du lot cryomodule
Nom	G. LEBRET	F.MALGERARD	S. BERRY	T.TRUBLET

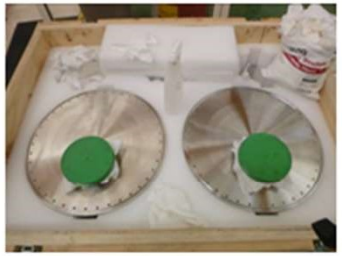

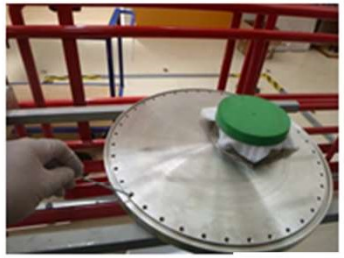

- Réception des transitions dans sa boite de transport, retirer le capot supérieur
- Déplacer la transition av nettoyer les trous avec des

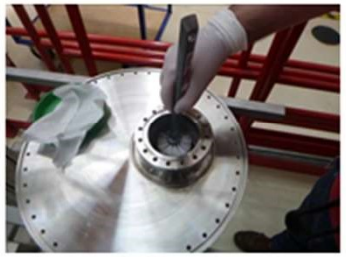

- Pré-nettoyer l'intérieur de la transition avec une brosse.
- Pré-nettoyage de l'intérieur la brosse.
- Ainsi que l'extérieur avec ch avec cotons tiges.

- Déposer la transition sur le charriot de lavage Belimed à son emplacement prévu (voir ci-dessus).
- Veiller à déplacer le charriot en dessous du pont roulant, en enlevant les barrières rouges, afin de déposer la transition plus facilement.
- Après avoir enlevé les élingues, nettoyer à nouveau les trous avec des cotons tiges.

- Rincer à plusieurs reprises la visserie après le nettoyage dans le bac à ultrasons.
- Nettoyer à nouveau les trous avec des cotons tiges.

Assembly Procedure: Entry of bellows and small parts

- Washing-rack re-used but
- Design and manufacturing of pipes and interfaces supporting parts to be done for PIP-II

Class 10 CR Entrance through Industrial Cleaner Dryer

Rotating nozzle inside the bellows and beam line transition

Assembly Procedure: Entry of Cavities

Cleaning tape marks with acetone and lint free cloth

Class 10 CR Entrance through Industrial Cleaner Dryer

- **Washing-rack re-used but**
- **Design and manufacturing of pipes and interfaces supporting parts to be done for PIP-II**

Flange Cleaning Procedure: Robot assistance

- Pre Cleaning with lint free cloth
- Ionized Nitrogen Blowing with robot assistance
- Particle check of each hole (loop if needed)

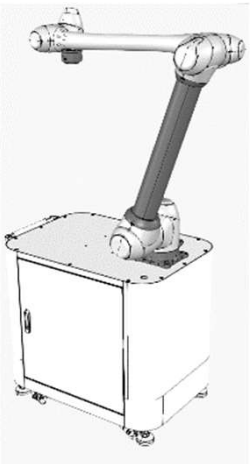

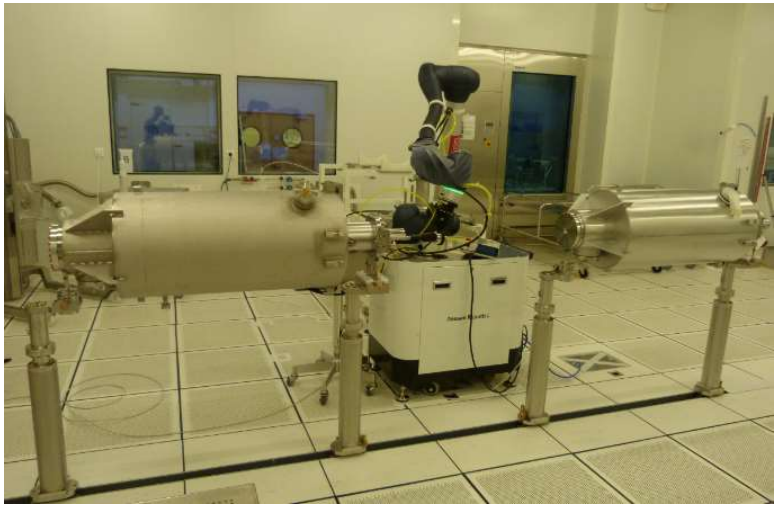

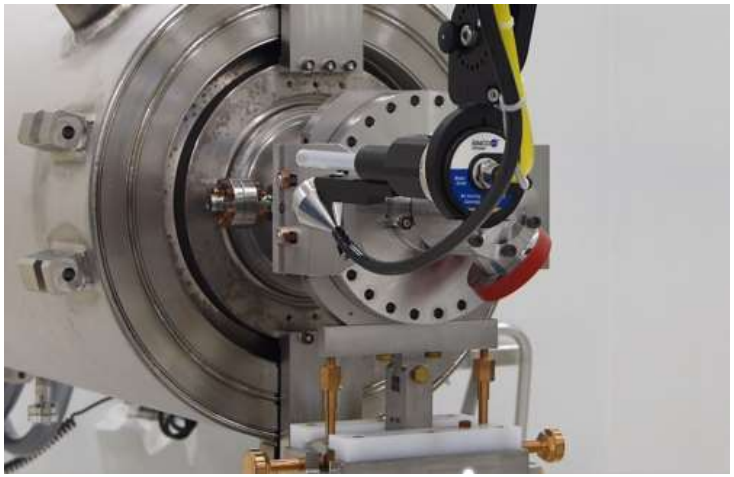

- Robot programming to be done for LB650 cavity flanges cleanning

Nitrogen Purging Strategy

- **Cavity venting and flushing through the valve V1 (V0 dedicated to pumping)**

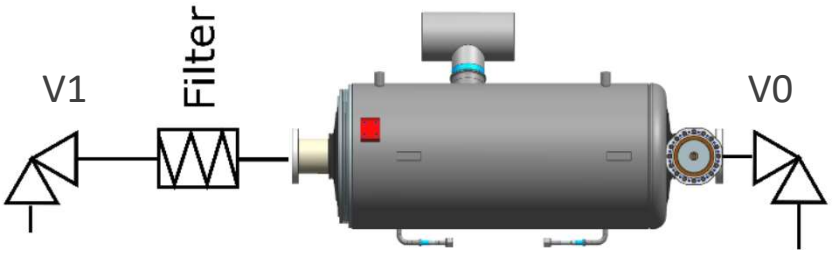

  - This basic idea presented in 2017 is not applied for ESS but will be implemented on SARAF project

- **Cavity string will assembled with two facing nitrogen flows**

Cavity String Assembly Procedure

OVERVIEW

- **gate valve in-line test (leak check ahead of the main assembly: Workstation VIT**
- **For pre-production CM (or few units), beam pipe end and gate valve assembly (intermediate leak check) : BGA**
  includes DS pump Assembly and US right angle valve assembly
- **Cavity leak test and slow venting at workstation CAR**
- **Cavity string and coupler assembled at one Workstation: TRA**

Test en fuite des ensembles Transition-VAT

Référence : BSF -ASS-TRA-17 V1.0

Procédure de test en fuite des ensembles Transition-VAT

General comments and prerequisite:
cavities alignment,
prepositioning of part before cleaning,
nitrogen flushing and flange cleaning before opening to RF surface,

Future work

- **Write down the detailled sequence: DS PUMP ASSY, GV, BPEA, Cav 1, blw1, Cav 2…**

Cavity String Assembly Procedure

1. Install Cavities on support posts
2. Align Cavities
3. Sub-assemble Gate Valve with Beam Pipe End Assembly *(intermediate LC for first units)*
4. Assemble Gate Valve Sub-Assy with Cavity #1: SA1
5. Install Bellows 1-2 on Bellows Holder
6. Install Bellows 1-2 to Cavity #2
7. Remove Bellows Holder
8. Install Bellows stiffeners
9. Install Bellows 1-2 to SA1
10. Lock Support Posts in position
11. Assemble the coupler
12. Repeat 3x operations 5 to 11 for the other cavities
13. Sub-assemble Gate Valve with Beam Pipe End Weldment "Short" *(intermediate LC for first units)*
14. Assemble Gate Valve Sub-Assy with Cavity #4

Cavity String Assembly Procedure (N2 aspect)

1. **Sub-assemble Gate Valve with Beam Pipe End Assembly** ***(intermediate LC for first units)***
   - Flush through nitrogen line
2. **Assemble Gate Valve Sub-Assy with Cavity #1: SA1**
   - Flush through V1
   - Remove V0 and flange
   - Assemble
3. **Assemble the bellows**
   - Remove V1,filter and flange
   - Assemble to the cavity
4. **Assemble the next cavity**
   - Remove V0 and flange
   - Assemble to the bellows

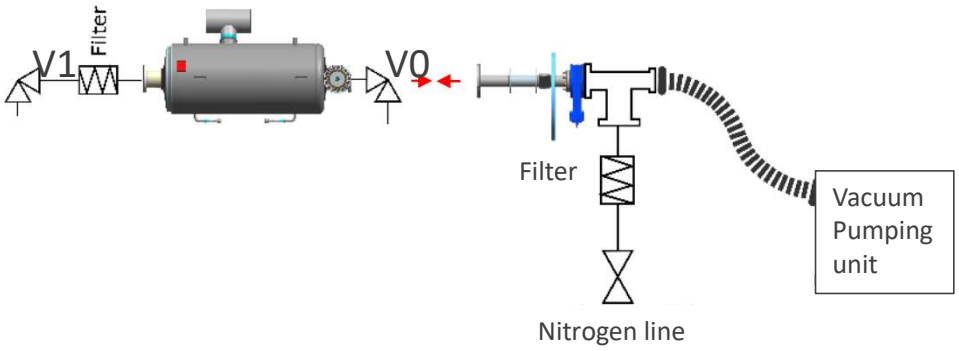

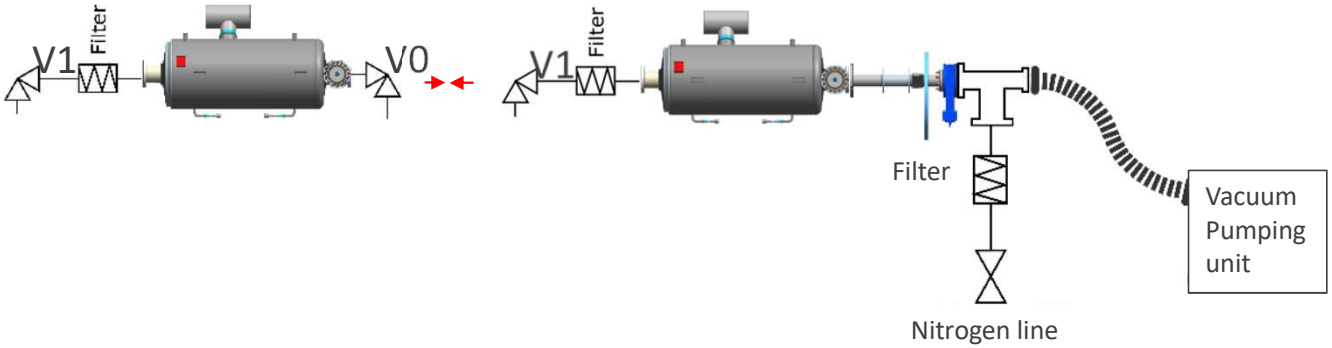

In vacuum particles counter

Vacuum particle monitor give the important information during slow pumping/venting

- **to qualify validate pumping/venting procedure**
- **Can be use at different places but we 'll get only one.**

- **Set-up able to detect 0,25µm particulates**

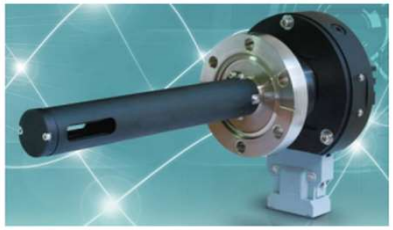

Vacuum particle sensor

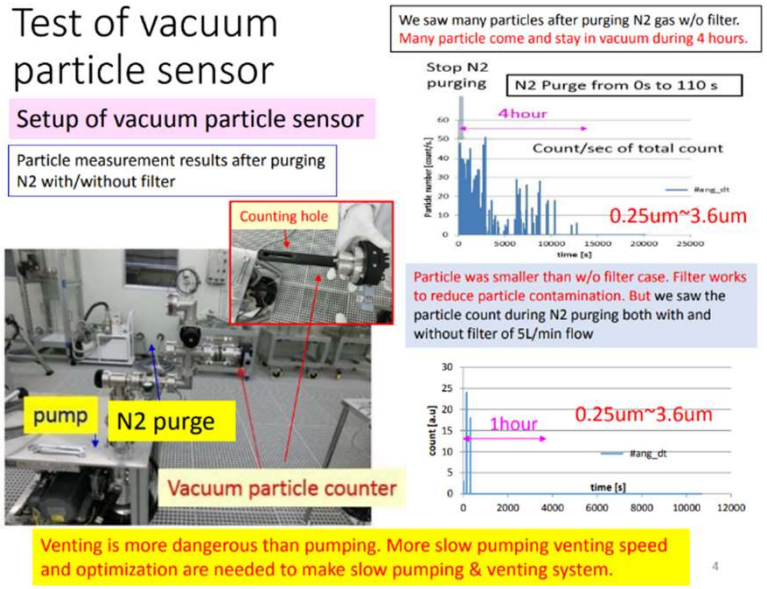

- **May be the best choice is to use it at the cavity venting workstation**

TTC meeting @ CERN, 2020.Feb.6

Summary

- Cavity String components: design checks and updates have been identified
- XFEL cleaning strategy for cavity will be used (Industrial washer-dryer is foreseen)
- ESS cleaning strategy for flanges and other small components will be used (Robot assistance)
- New Nitrogen venting strategy has been identified for cavity and coupler pairs (filter assemble by the cavity vendor and by the coupler conditioning lab)
- Cavity string assembly sequence is added value optimized (coupler assembly once its cavity is already on the string the handling is minimized)
- In vacuum particles counter will be used to qualify validate pumping/venting procedure first and then used during assembly

Thanks

DE LA RECHERCHE À L'INDUSTRIE

Gate Valve Manual actuator (VAT vs. CEA)

5505000_OUTILLAGE_VANNE

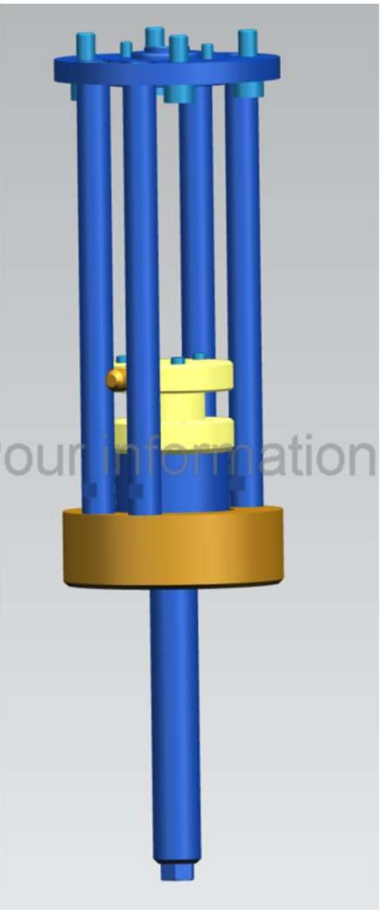

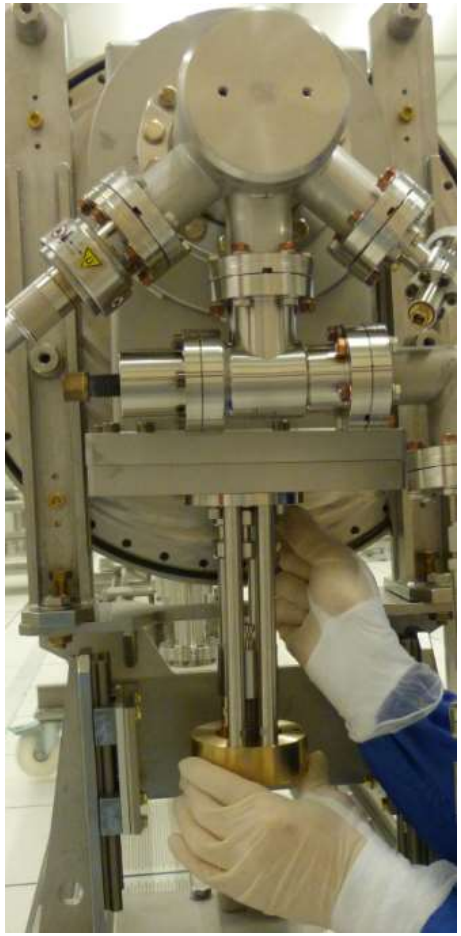

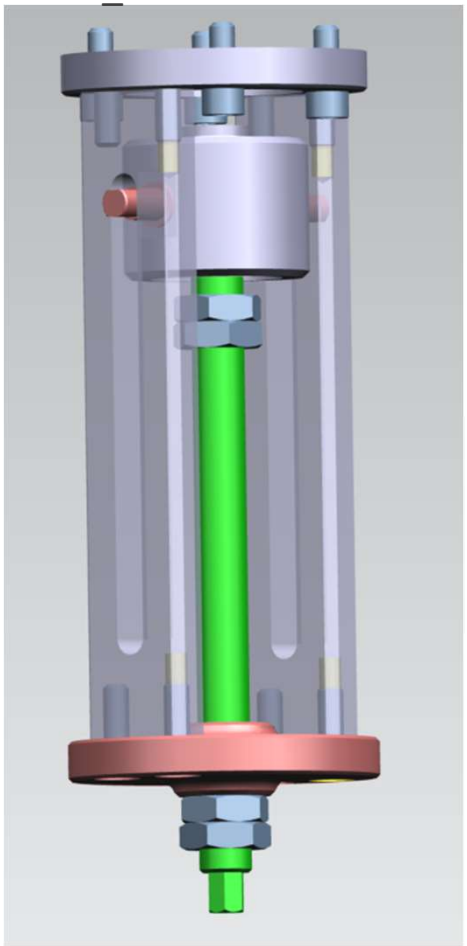

VAT actuator uses the “diabolo” (yellow highlighted) part of the gate valve while CEA actuator directly fixed to the valve axis

ESS like Pump Assembly

DN100 cf pumping « pot » with 3 DN40CF ports

Pirani jauge

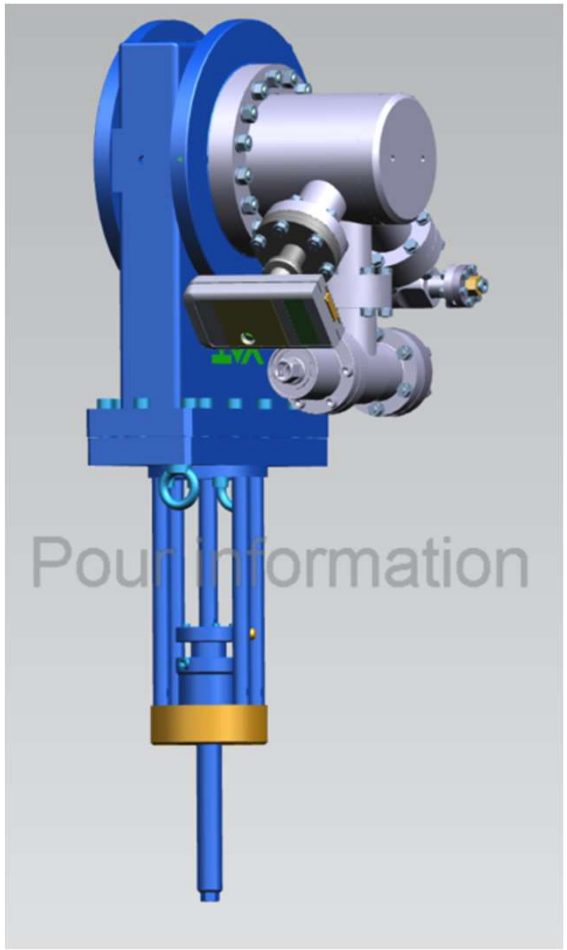

All metal DN16CF right angle valve

All metal DN40CF right angle valve

Asymmetric flange from DN63 to DN100 need to be introduced in the model and check if no collisions appears

Interconnection assemblies: diameters check

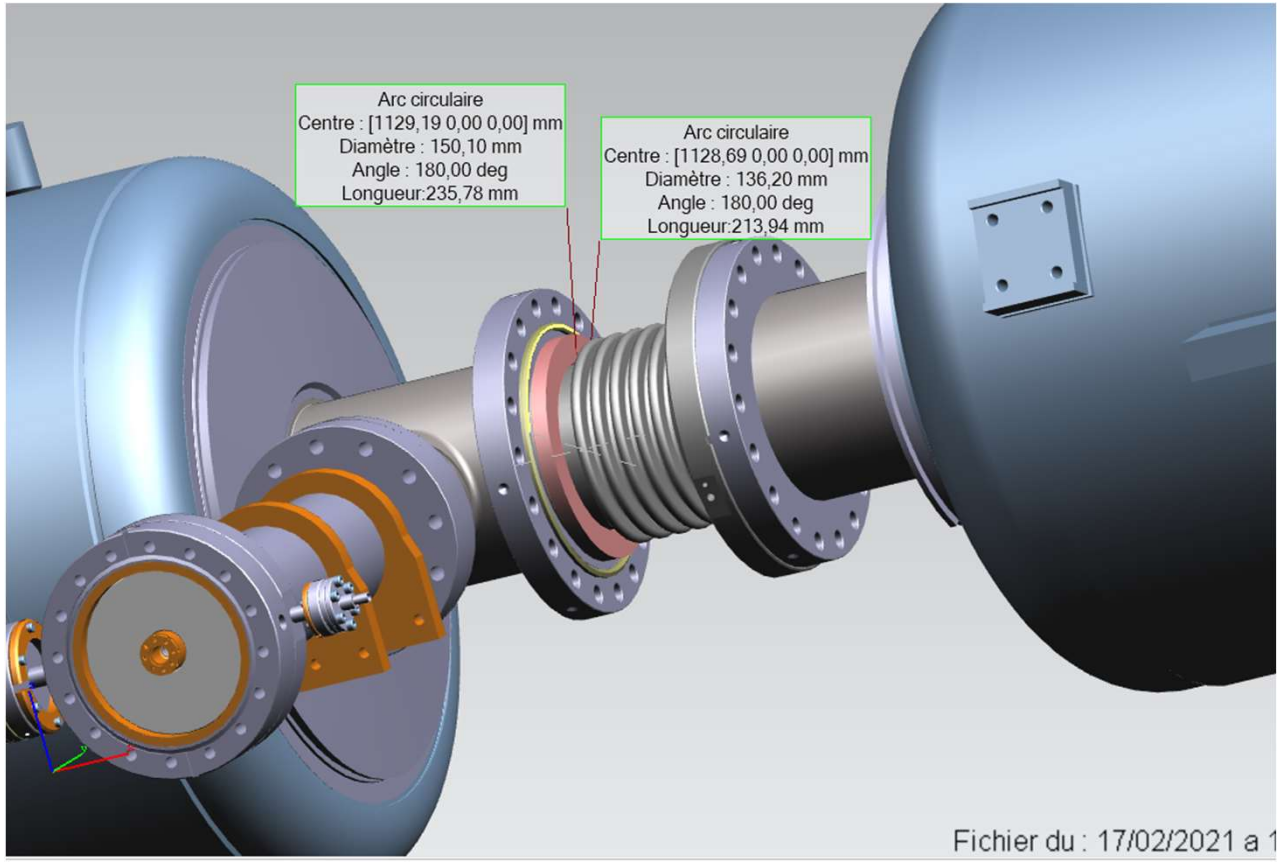

This assembly can't be leak tight → change the design
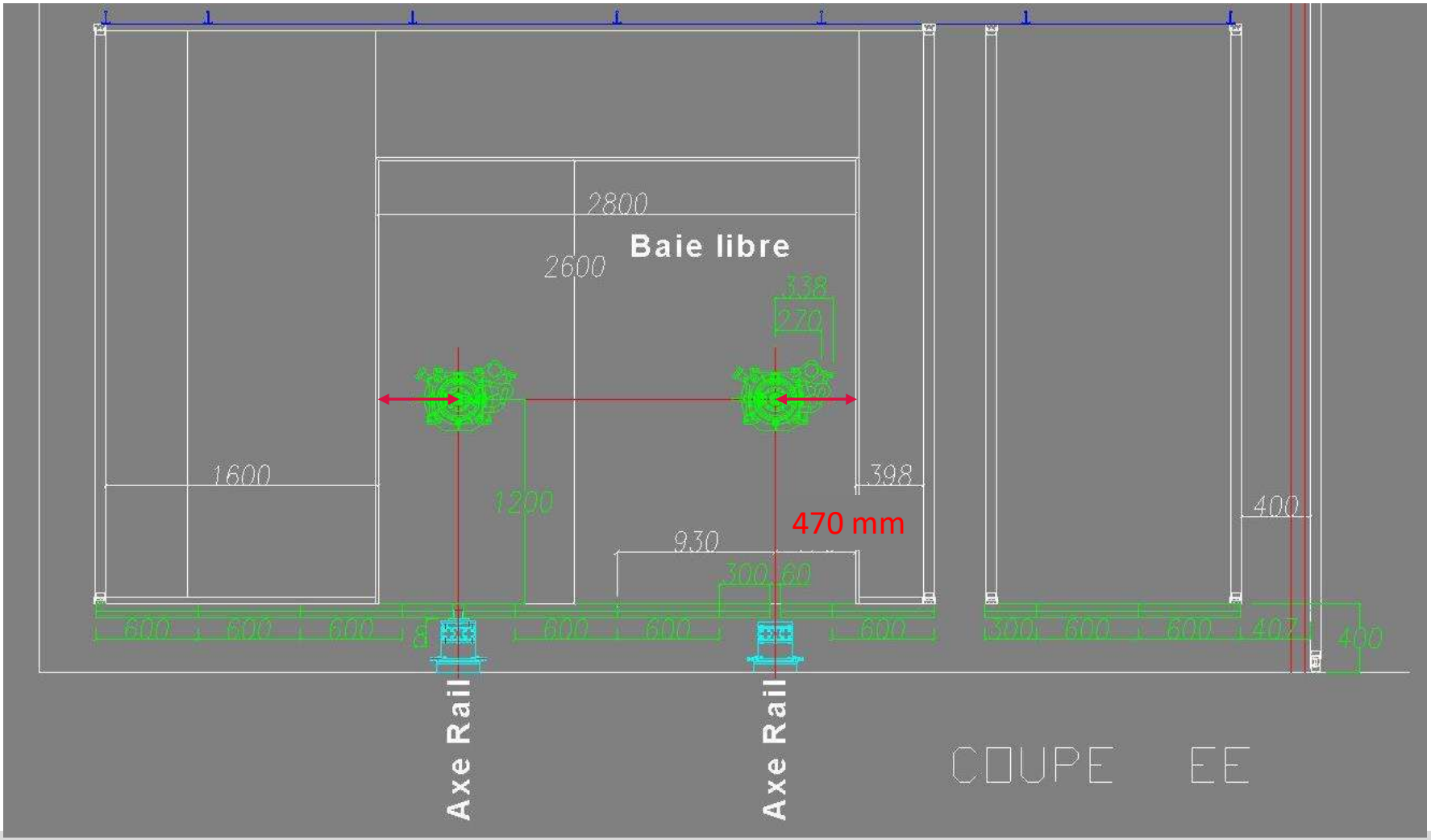
Rail axis to the door: 470 mm