DE LA RECHERCHE À L'INDUSTRIE

Transportation Studies

R. Cubizolles

OUTLINE

- Parts studied
- Methodology of the studies
- Simulations
- Conclusion

PARTS STUDIED

Overview of the cryomodule

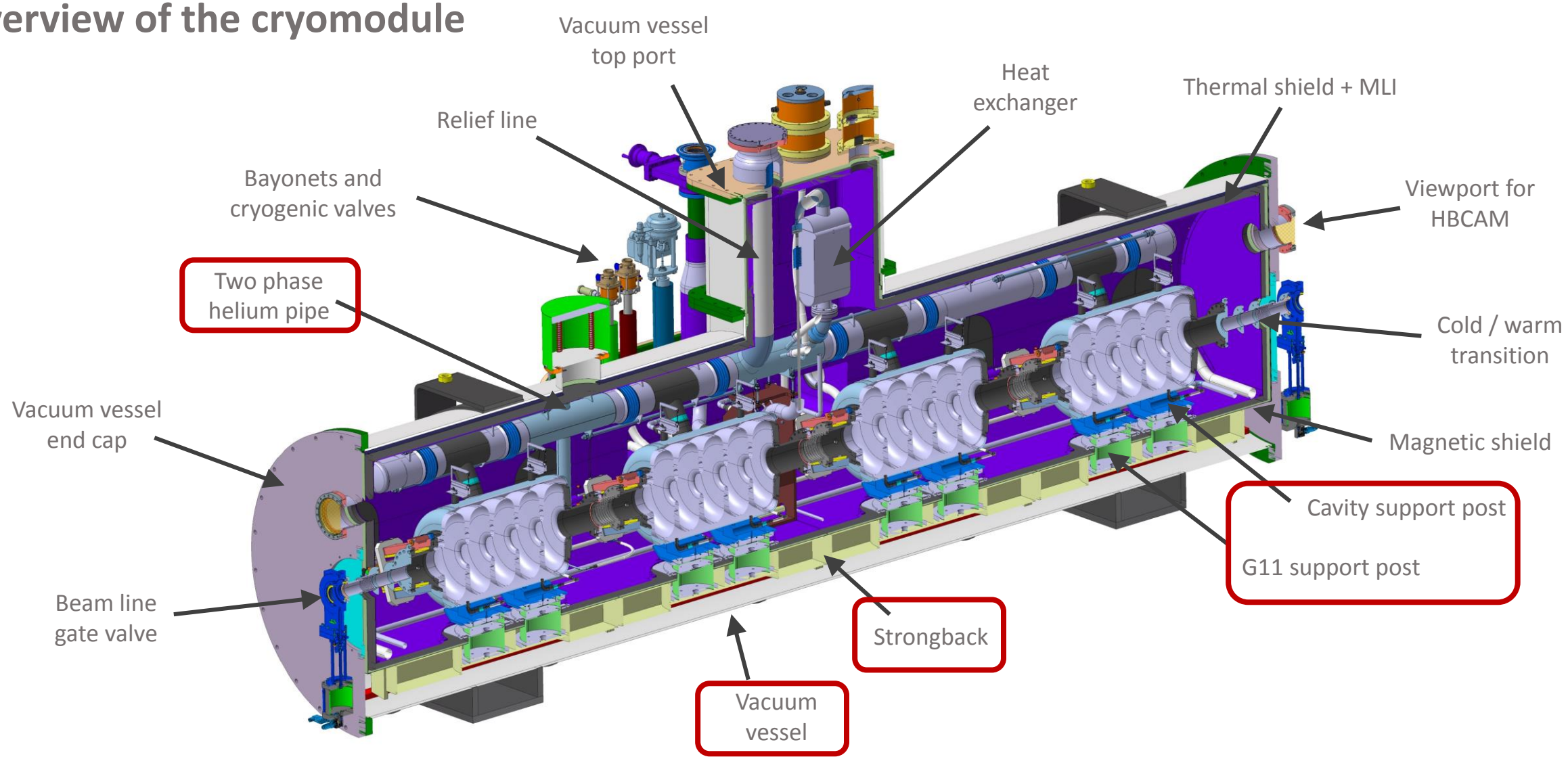

METHODOLOGY OF THE STUDIES

METHODOLOGY OF THE STUDIES

At first, the simulations are performed on **individual** components of the cryomodule.

Two types of simulations for the transportation studies are done :

- S1|Quasi-static simulations
  - S1.x |5.0g on the beam axis
  - S1.y |1.5g on the lateral axis
  - S1.z |3.0g on the vertical axis
- S2 |Modal analysis
  - Target on all modes >30Hz
    (for individual components)
  - Target on whole cryomodule >20Hz

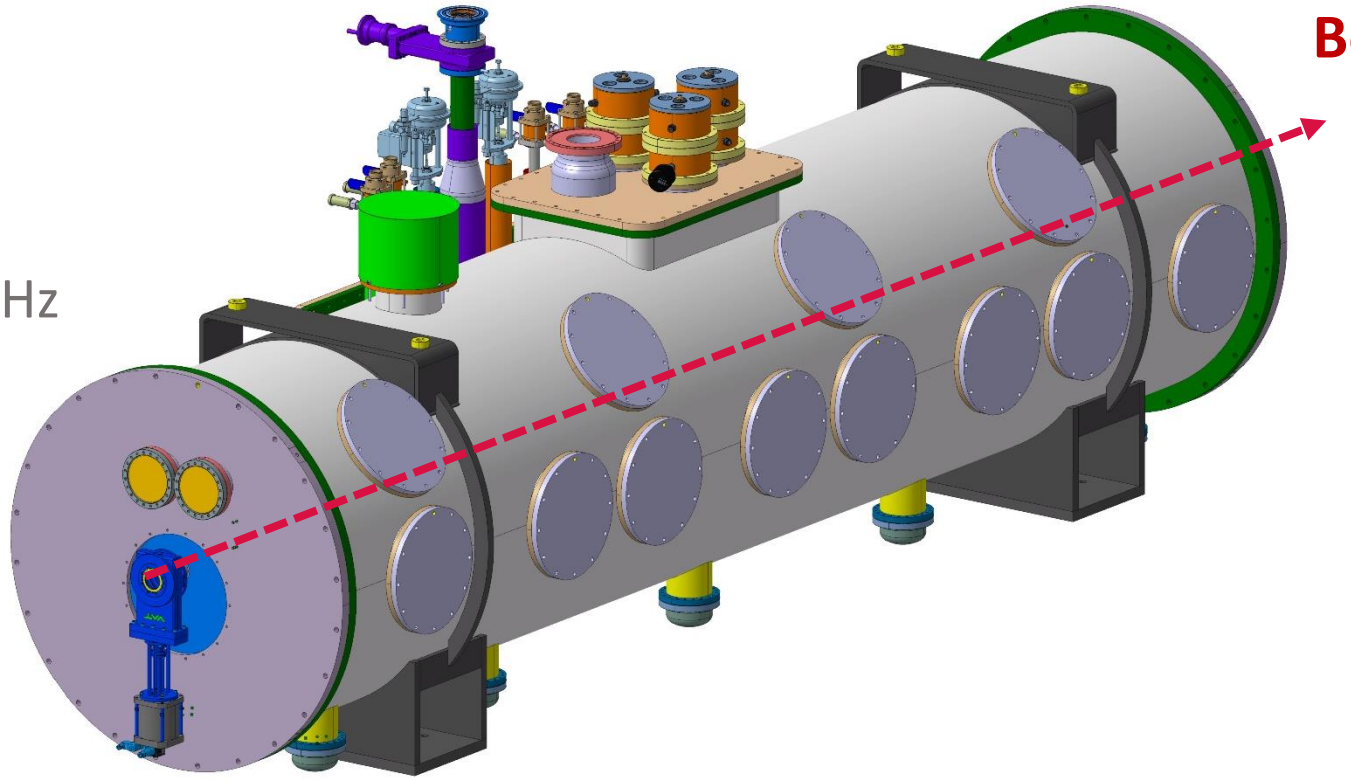

METHODOLOGY OF THE STUDIES

At first, the simulations are performed on **individual** components of the cryomodule.

Two types of simulations for the transportation studies are done :

- S1|Quasi-static simulations
  - **S1.x |5.0g on the beam axis**
  - S1.y |1.5g on the lateral axis
  - S1.z |3.0g on the vertical axis
- S2 |Modal analysis
  - Target on all modes >30Hz
    (for individual components)
  - Target on whole cryomodule >20Hz

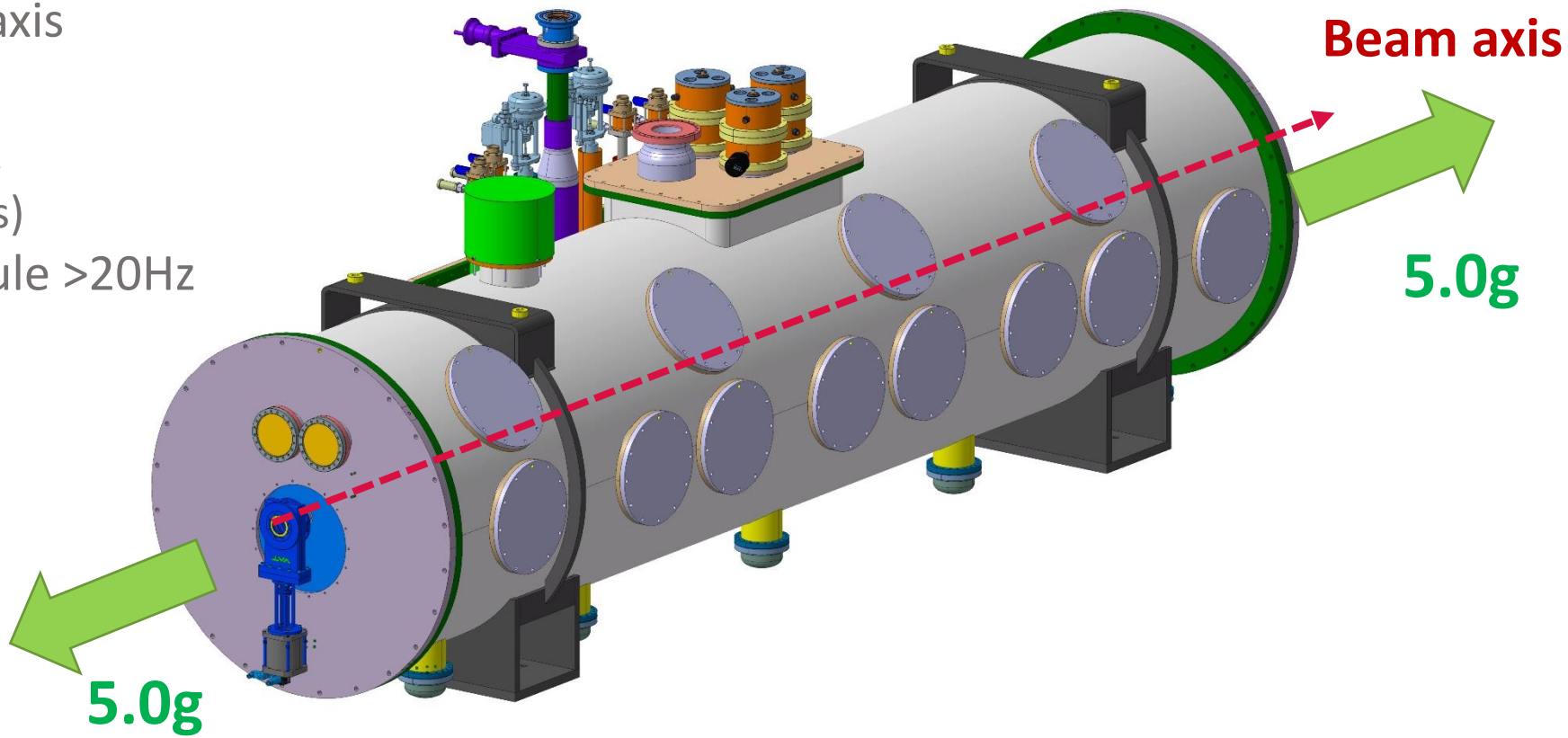

METHODOLOGY OF THE STUDIES

At first, the simulations are performed on **individual** components of the cryomodule.

Two types of simulations for the transportation studies are done :

- S1|Quasi-static simulations
  - S1.x |5.0g on the beam axis
  - **S1.y |1.5g on the lateral axis**
  - S1.z |3.0g on the vertical axis
- S2 |Modal analysis
  - Target on all modes >30Hz (for individual components)
  - Target on whole cryomodule >20Hz

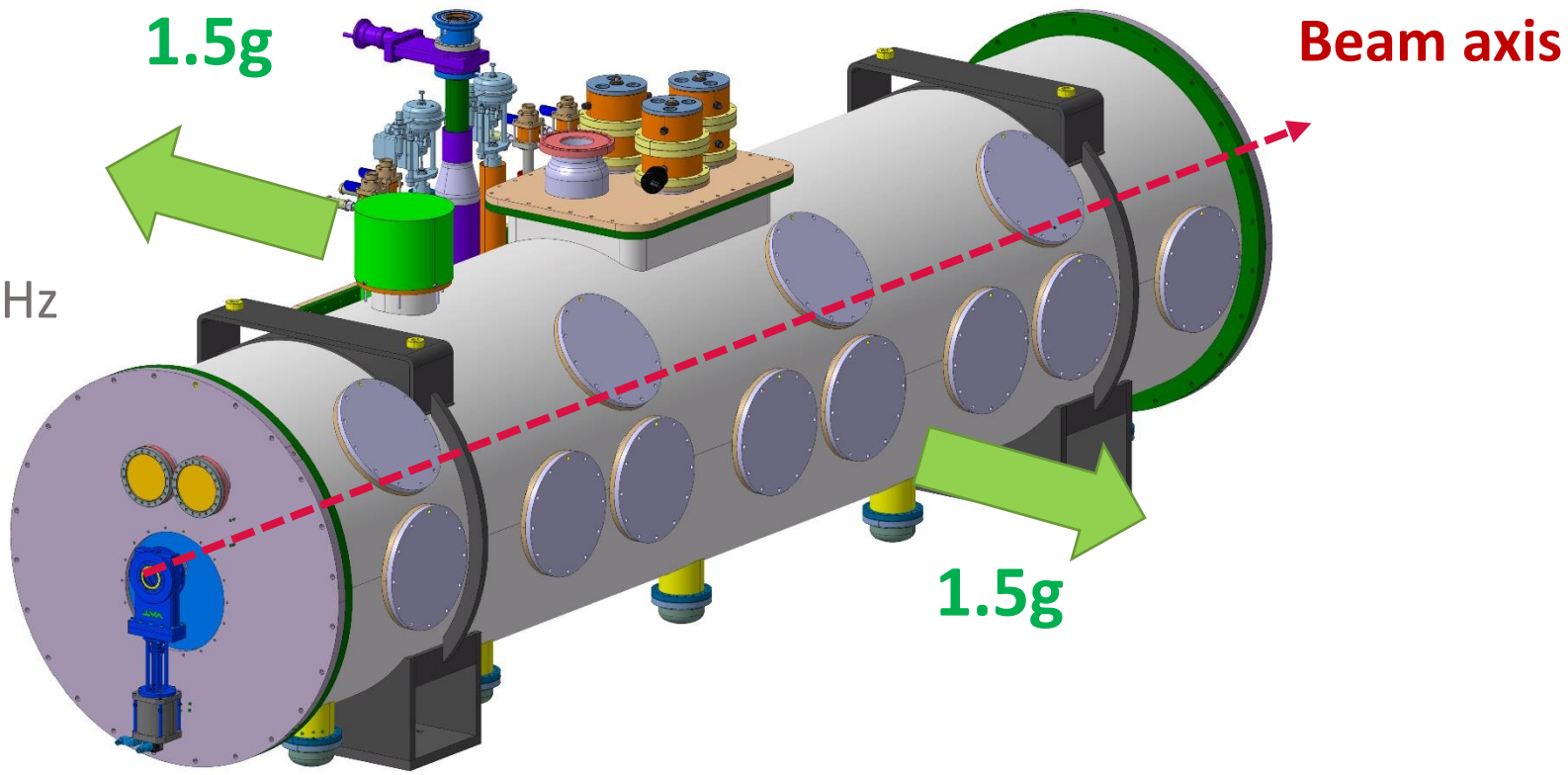

METHODOLOGY OF THE STUDIES

At first, the simulations are performed on **individual** components of the cryomodule.

Two types of simulations for the transportation studies are done :

- S1|Quasi-static simulations
  - S1.x |5.0g on the beam axis
  - S1.y |1.5g on the lateral axis
  - **S1.z |3.0g on the vertical axis**
- S2 |Modal analysis
  - Target on all modes >30Hz (for individual components)
  - Target on whole cryomodule >20Hz

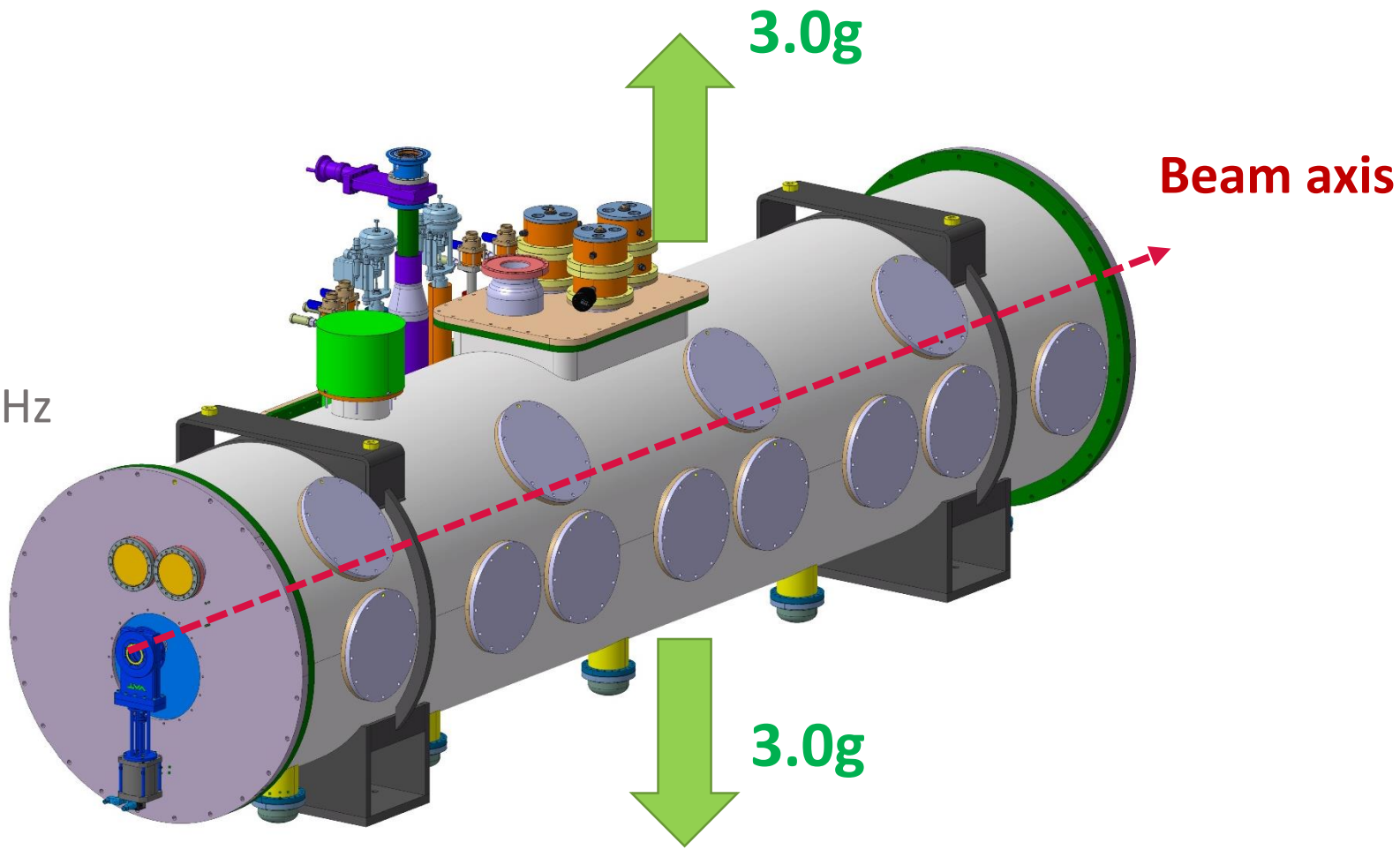

SIMULATIONS

Overview of the cryomodule

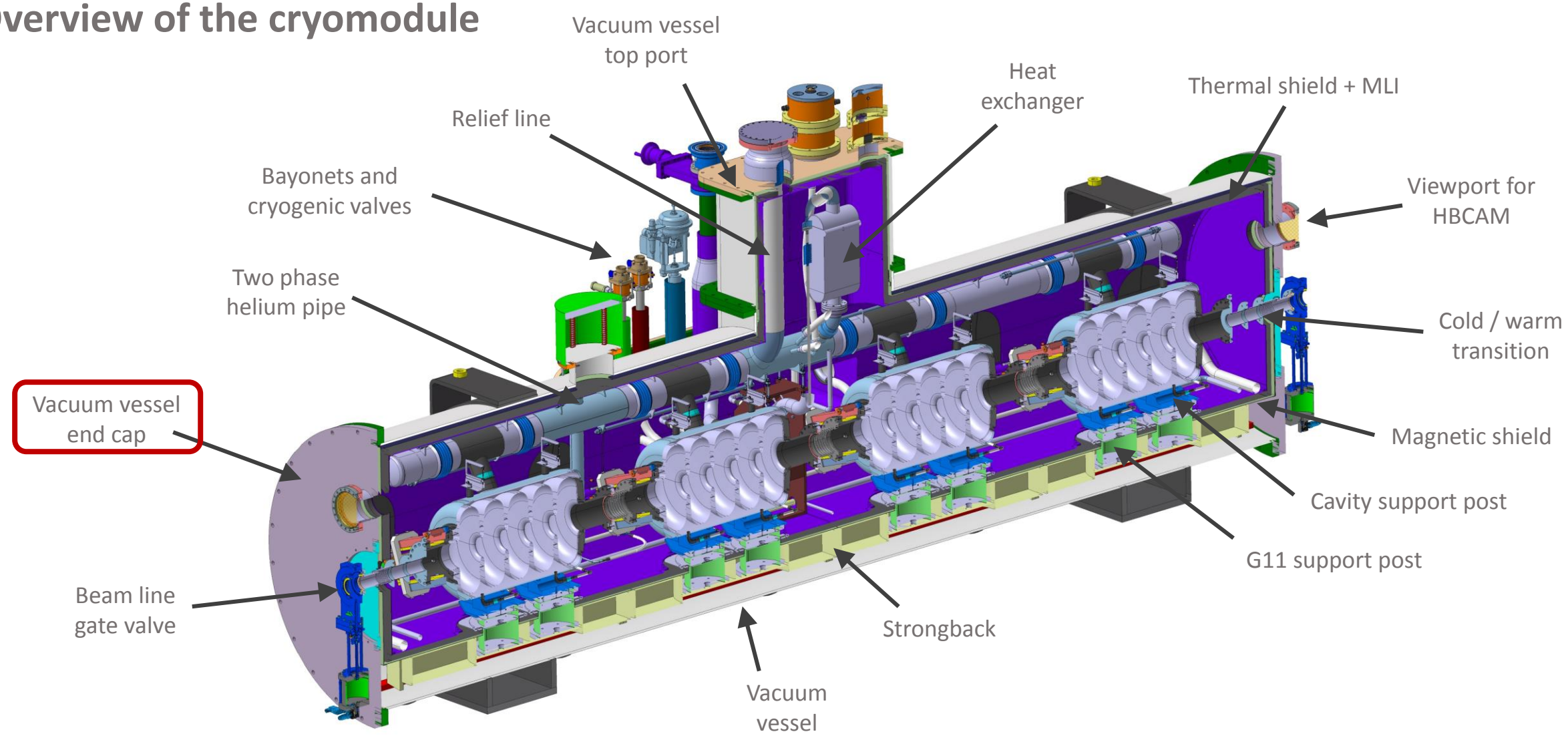

Vacuum vessel boundary conditions

- Interfaces with the ground is fixed.
- A mass of 2800kg is connected to the strongback interfaces. The point mass is located in the center of the vacuum vessel along the beam axis.

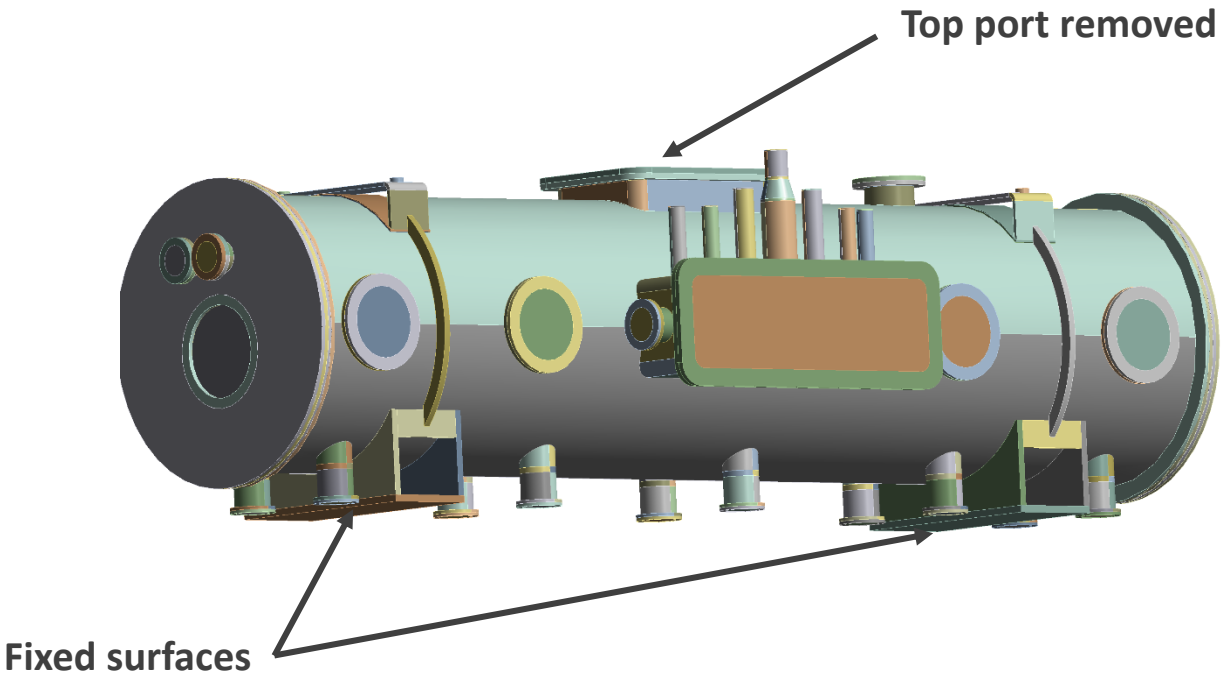

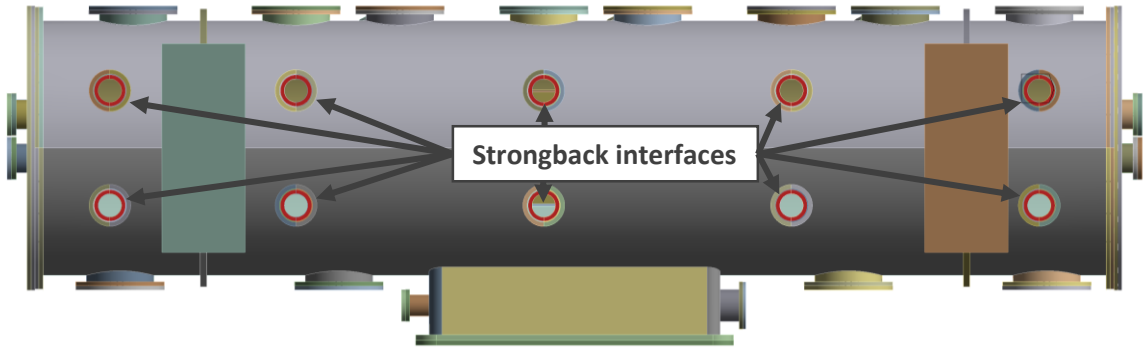

Vacuum vessel Results – Quasi static simulations

S1.x | Displacement

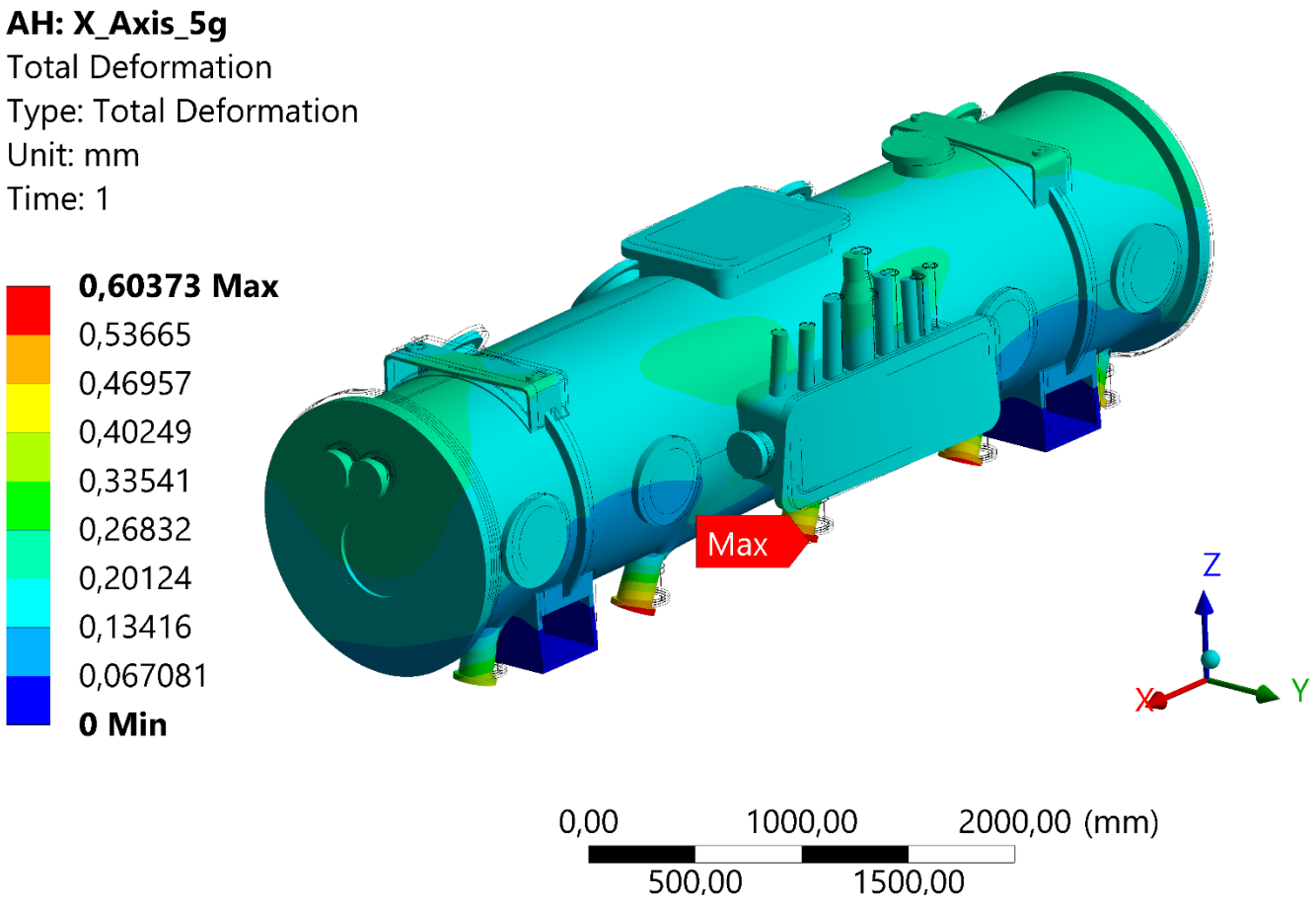

Type of simulations		Maximum	
		Stress	Displacements
S1	S1.x	226 MPa	0.6 mm
	S1.y	220 MPa	2.1 mm
	S1.z	92 MPa	1.7 mm

Stress (for P355gh Steel) and displacement are acceptable for the quasi-static acceleration simulations.

Vacuum vessel Results – Quasi static simulations

S1.x | Stress

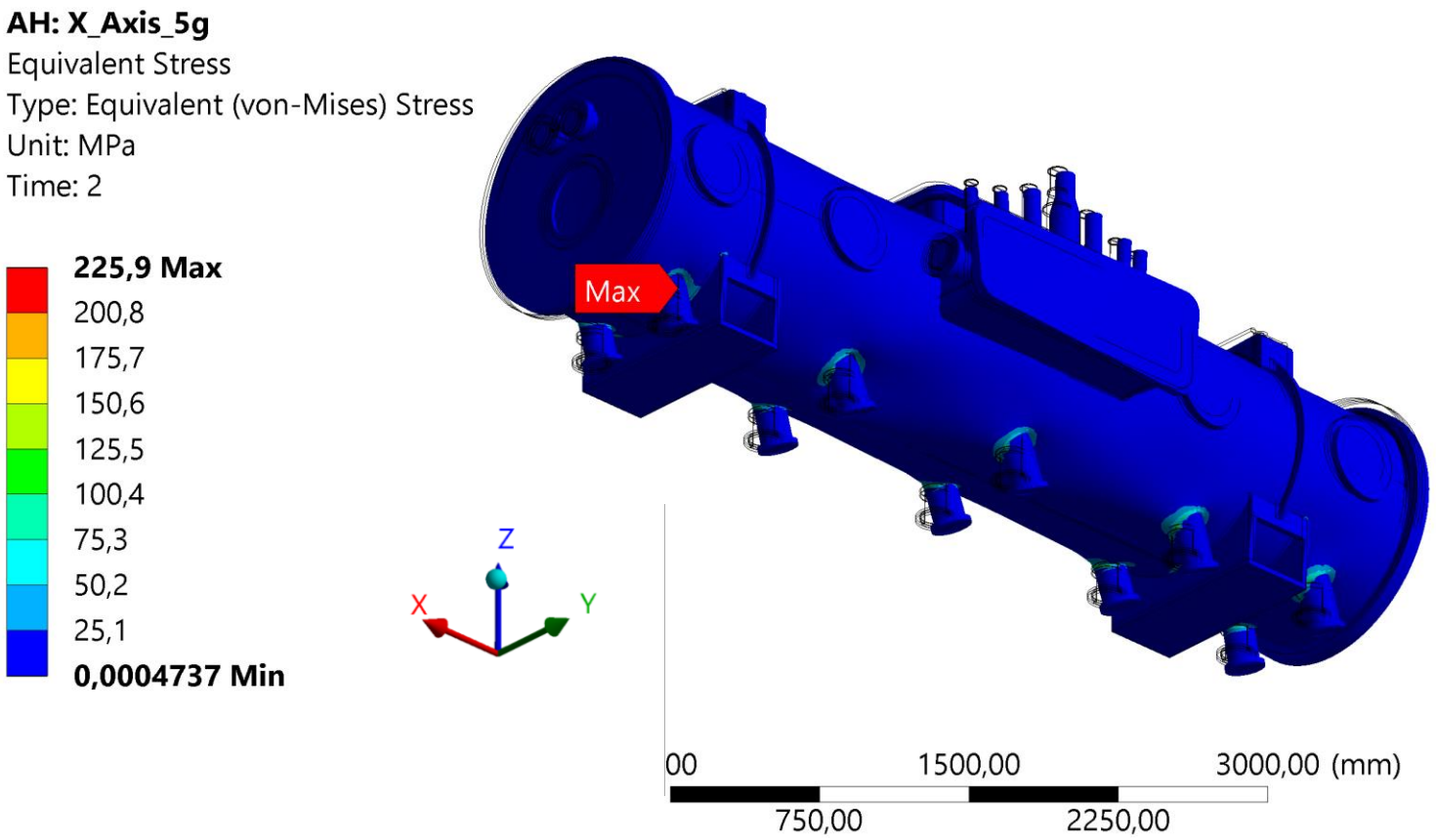

Type of simulations		Maximum	
		Stress	Displacements
S1	S1.x	226 MPa	0.6 mm
	S1.y	220 MPa	2.1 mm
	S1.z	92 MPa	1.7 mm

Stress and displacement are acceptable for the quasi-static acceleration simulations. (*P355gh Steel stress limit at 355MPa*0.8 = 284 MPa*)

Vacuum vessel Results – Quasi static simulations

S1.y | Stress

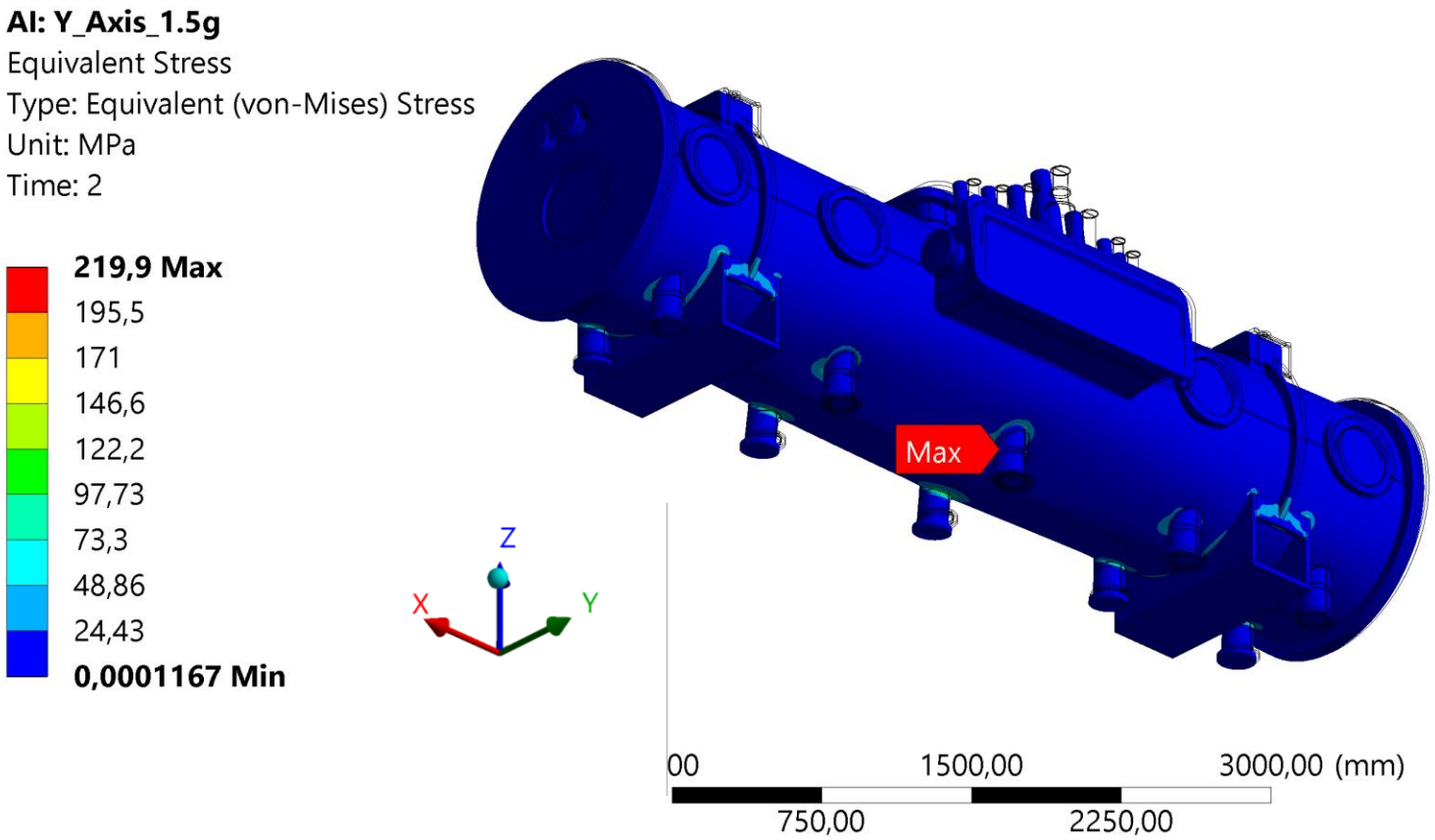

Type of simulations		Maximum	
		Stress	Displacements
S1	S1.x	226 MPa	0.6 mm
	S1.y	220 MPa	2.1 mm
	S1.z	92 MPa	1.7 mm

Stress and displacement are acceptable for the quasi-static acceleration simulations. (*P355gh Steel stress limit at 355MPa*0.8 = 284 MPa*)

Vacuum vessel results – Modal simulations

		Frequency	Effective mass		
			X	Y	Z
S2	Mode 1	18.5 Hz	0.00%	0.83%	0.09%
	Mode 2	20.4 Hz	0.00%	66.7%	0.47%
	Mode 3	34.4 Hz	0.01%	1.60%	7.40%
	Mode 4	48.7 Hz	0.00%	3.45%	5.76%

Mode 1

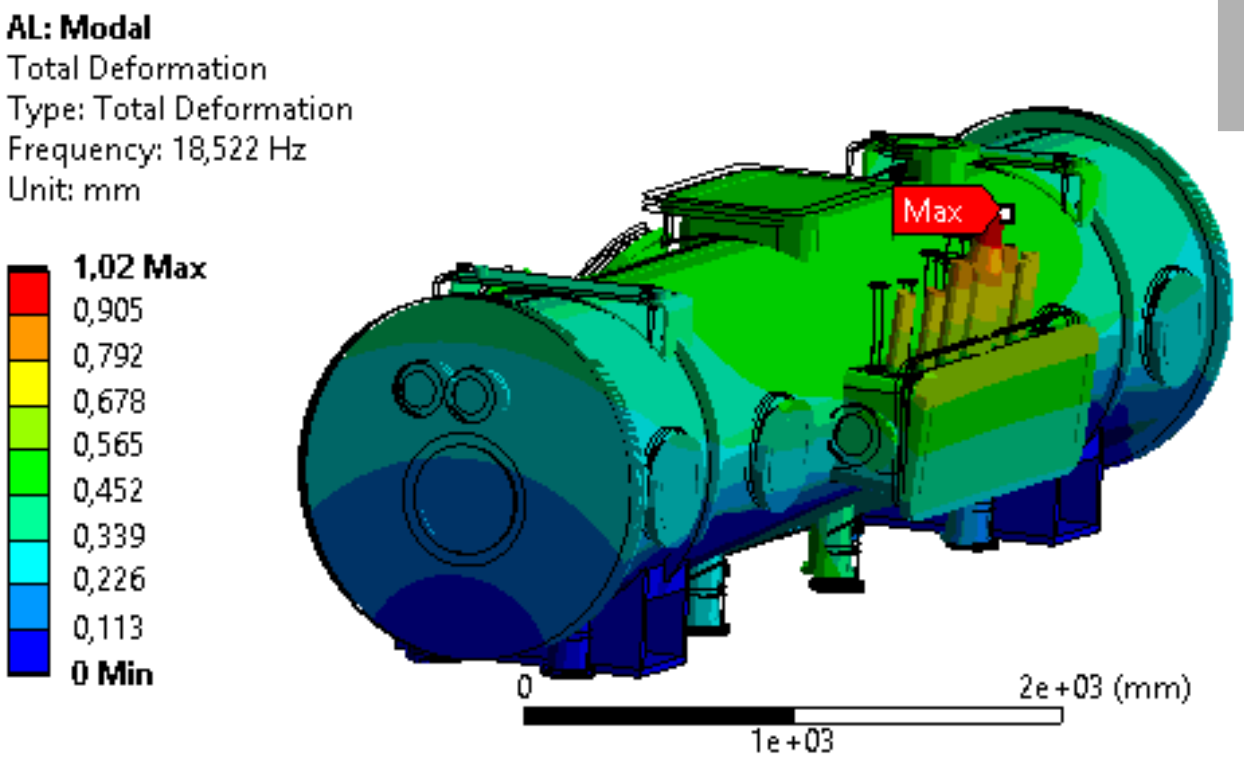

The first mode is under 20 Hz but the effective mass participating to this mode is low.
The second mode and last mode under 30Hz have a high effective mass.

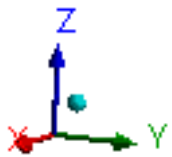

Vacuum vessel results – Modal simulations

		Frequency	Effective mass		
			X	Y	Z
S2	Mode 1	18.5 Hz	0.00%	0.83%	0.09%
	Mode 2	20.4 Hz	0.00%	66.7%	0.47%
	Mode 3	34.4 Hz	0.01%	1.60%	7.40%
	Mode 4	48.7 Hz	0.00%	3.45%	5.76%

Mode 2

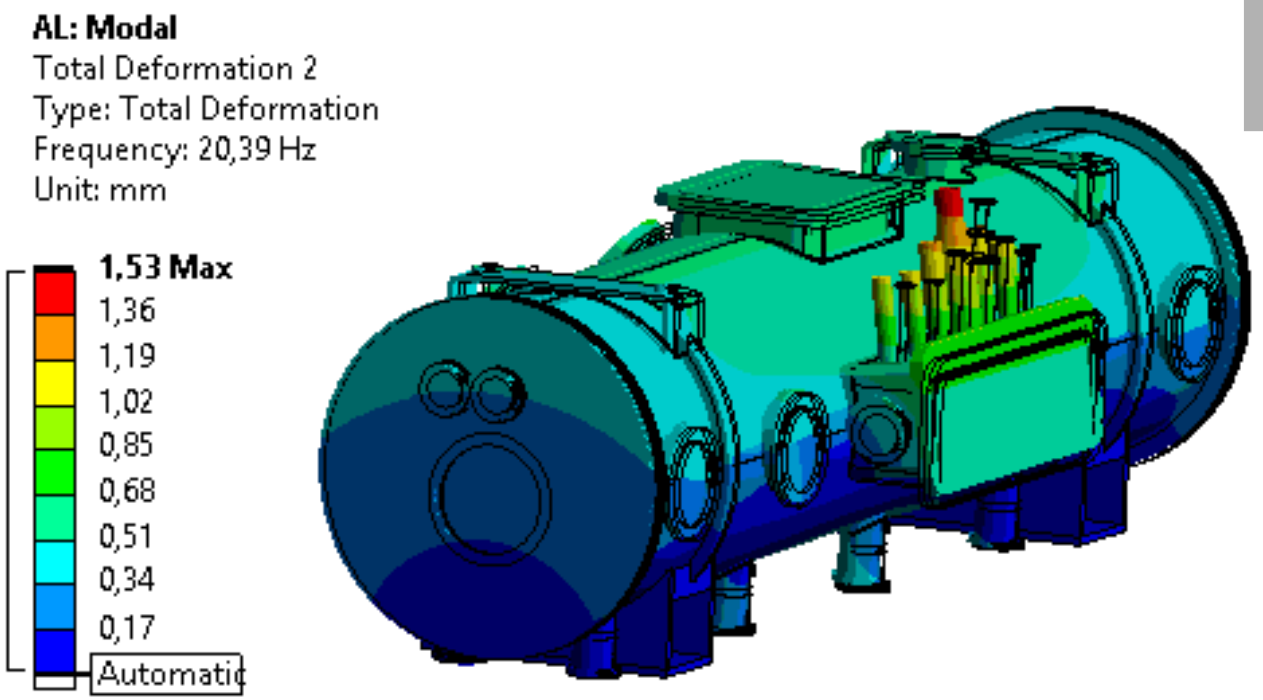

The first mode is under 20 Hz but the effective mass participating to this mode is low.
The second mode and last mode under 30Hz have a high effective mass.

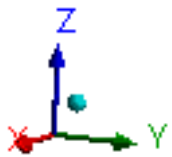

Vacuum vessel results – Modal simulations

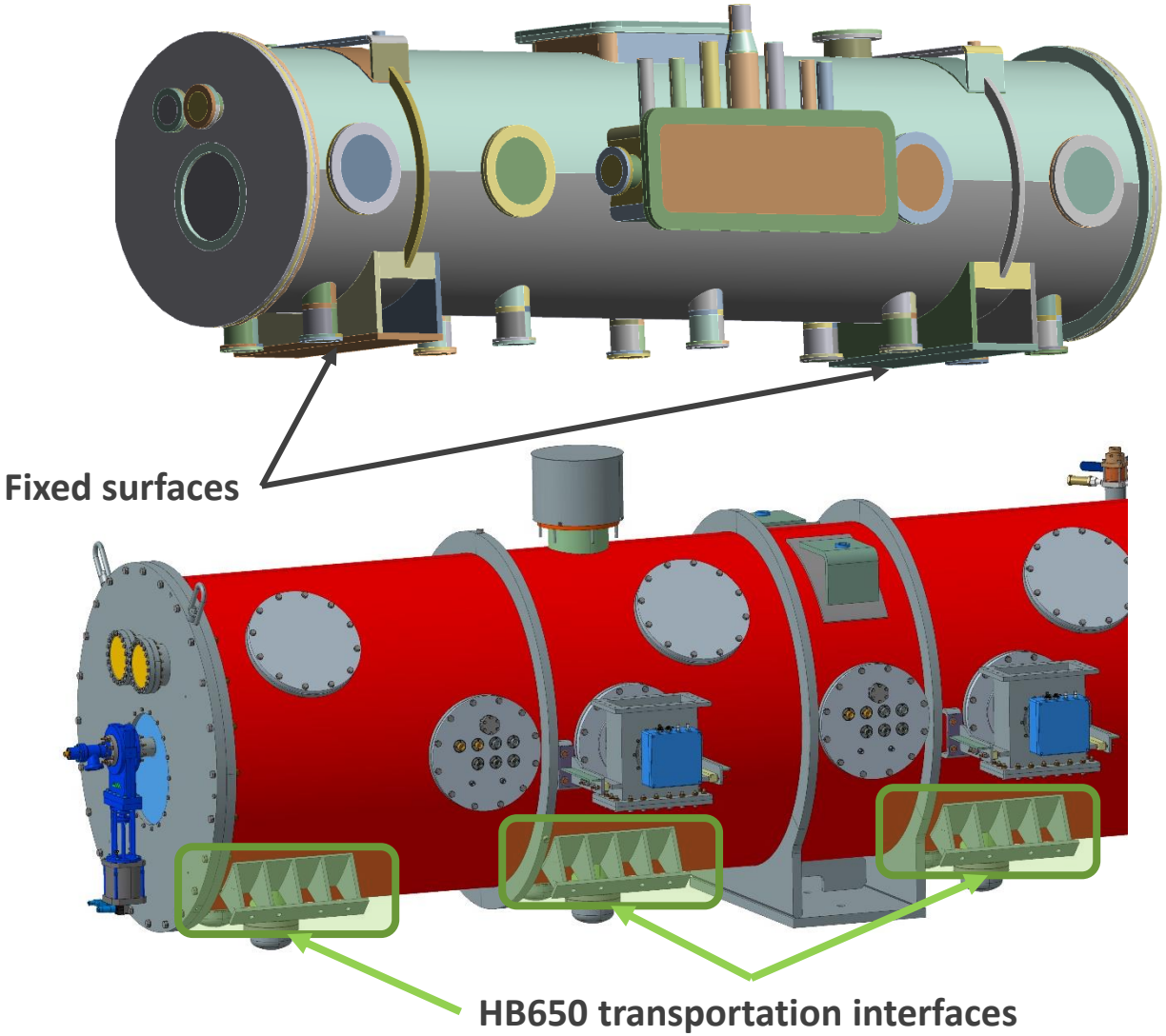

		Frequency	Effective mass		
			X	Y	Z
S2	Mode 1	18.5 Hz	0.00%	0.83%	0.09%
	Mode 2	20.4 Hz	0.00%	66.7%	0.47%
	Mode 3	34.4 Hz	0.01%	1.60%	7.40%
	Mode 4	48.7 Hz	0.00%	3.45%	5.76%

For the previous simulations the ground (or stand) interfaces where fixed. Specific interfaces as for the HB650 cryomodule will be design for the transportation.

The location of these interfaces will be placed as close as possible to the stud (and thus to the coupler) locations and will increase the stiffness of the vacuum vessel.

Overview of the cryomodule

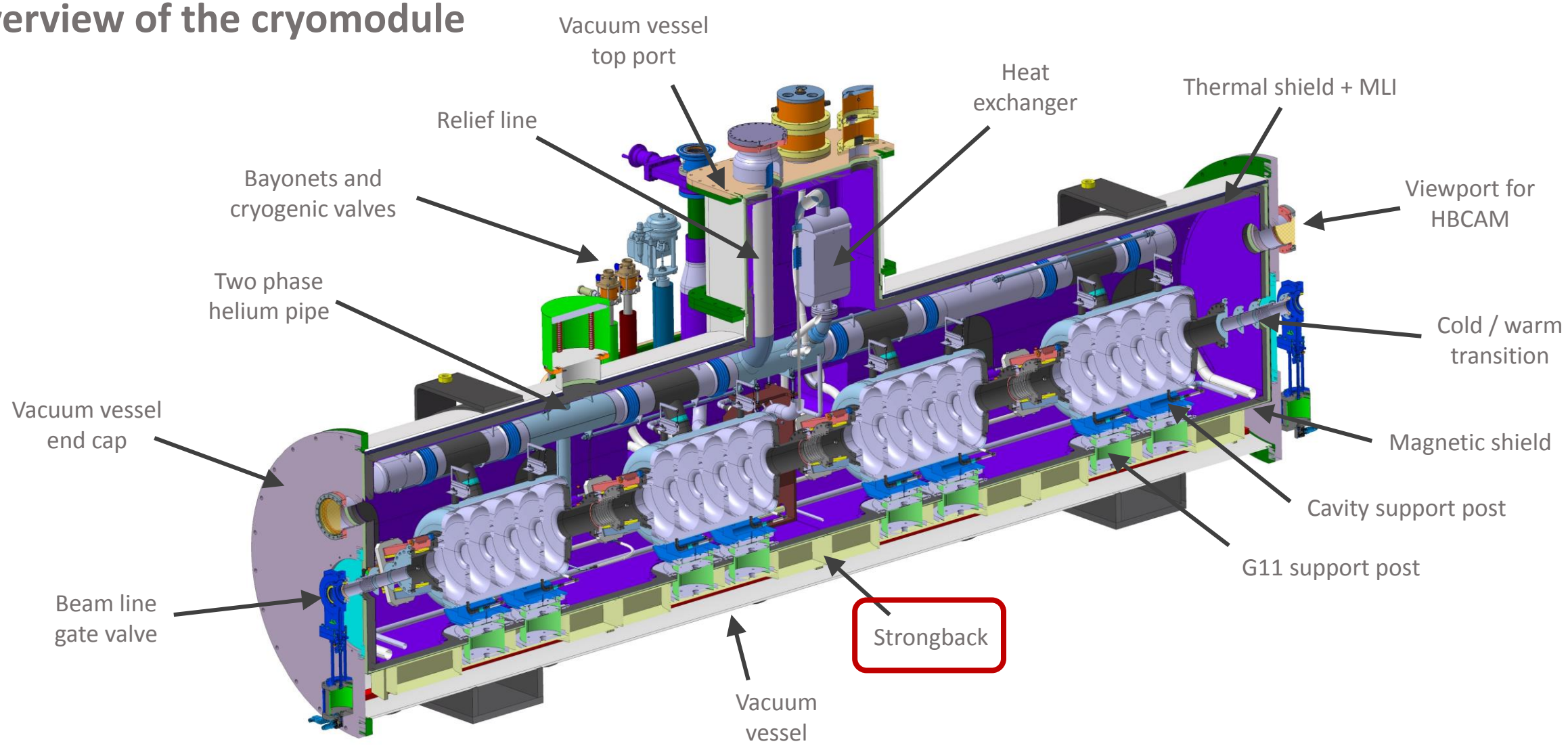

Strongback boundary conditions

- Interfaces with the studs are fixed
- Mass points of 350kg are attached on the interfaces with the cavity posts. The eight masses located on the beam axis at 495 mm from the cavity post interface of the strongback. The total of the mass points is 2800kg and correspond to the estimated cold mass mass.

Bottom view of the LB650 strongback

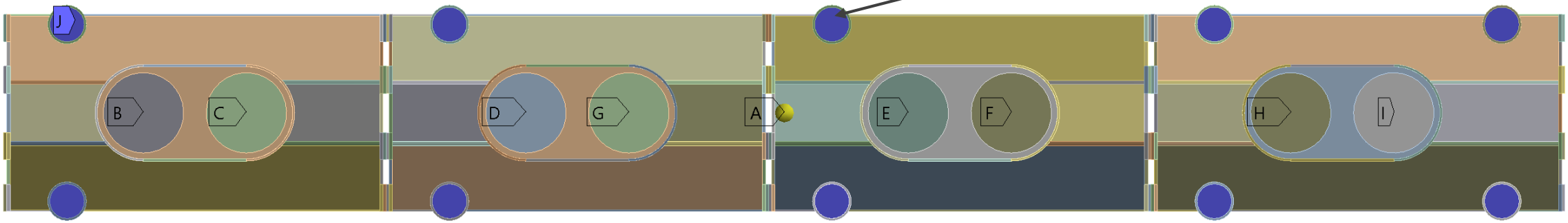

Strongback boundary conditions

- Interfaces with the studs are fixed
- Mass points of 350kg are attached on the interfaces with the cavity posts. The eight masses located on the beam axis at 495 mm from the cavity post interface of the strongback. The total of the mass points is 2800kg and correspond to the estimated cold mass mass.

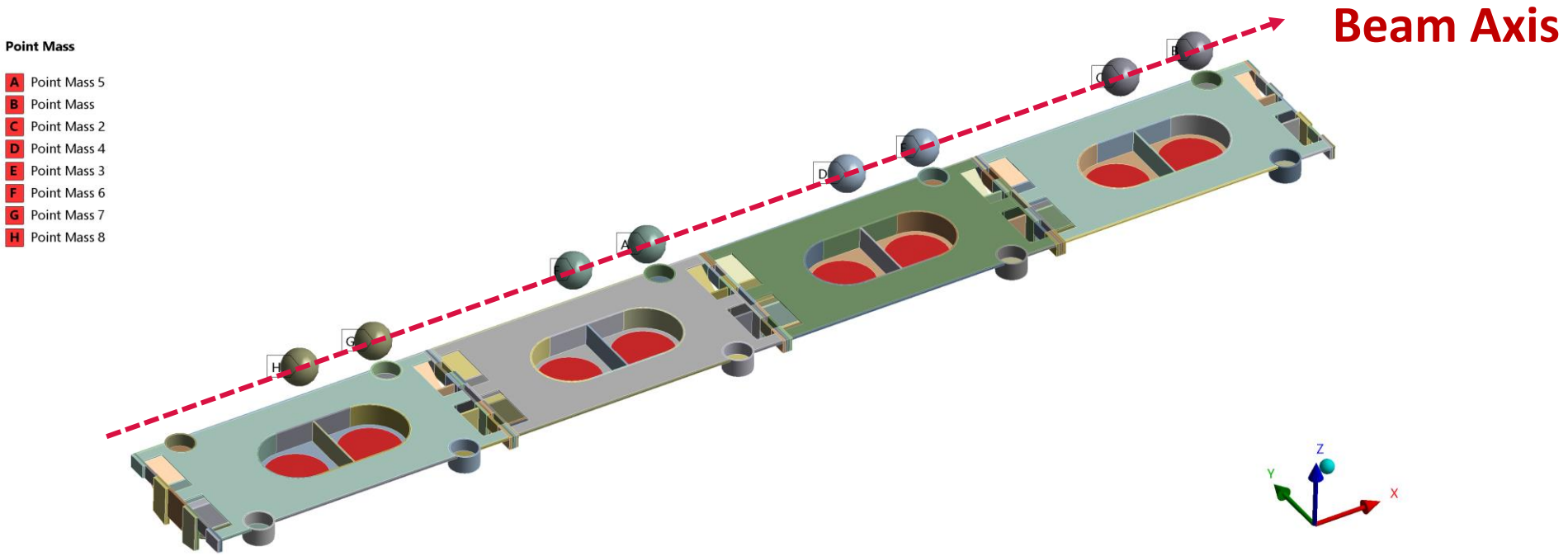

Strongback Results – Quasi static simulations

S1.x | Stress

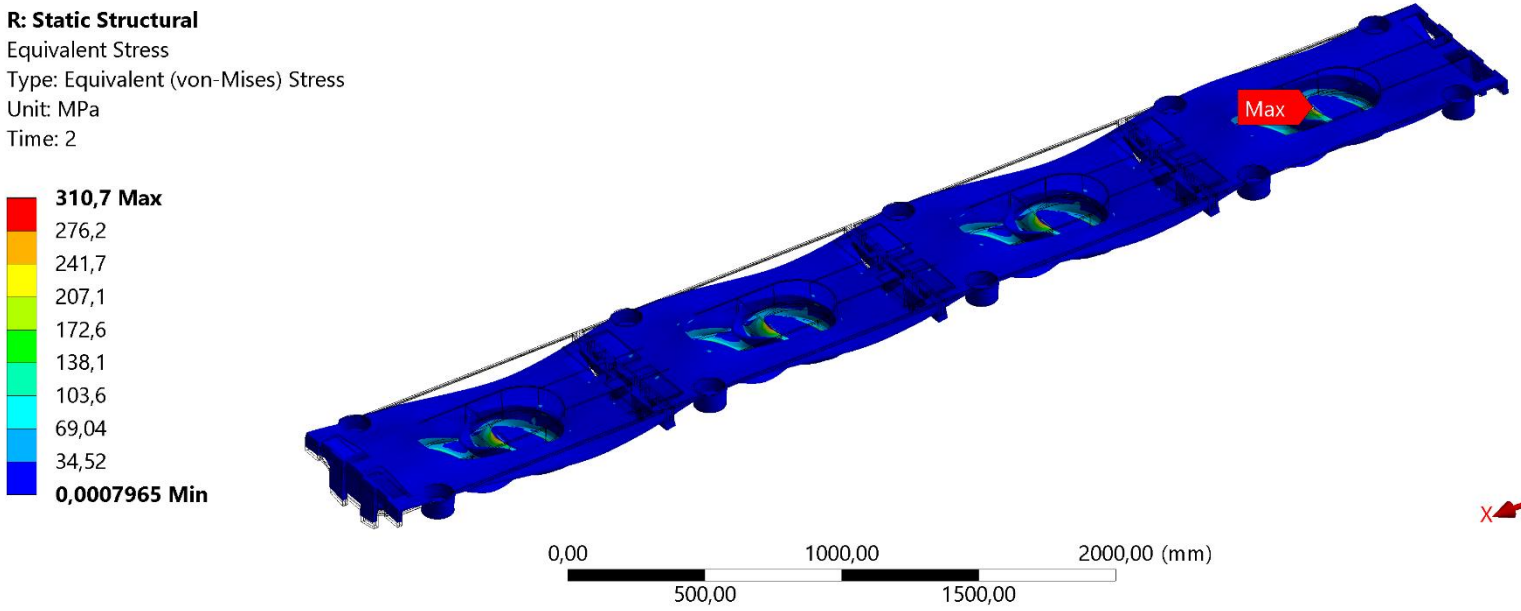

Type of simulations		Maximum	
		Stress	Displacements
S1	S1.x	311 MPa	0.21 mm
	S1.y	97 MPa	0.20 mm
	S1.z	53 MPa	0.16 mm

Strongback Results – Quasi static simulations

S1.x | Stress

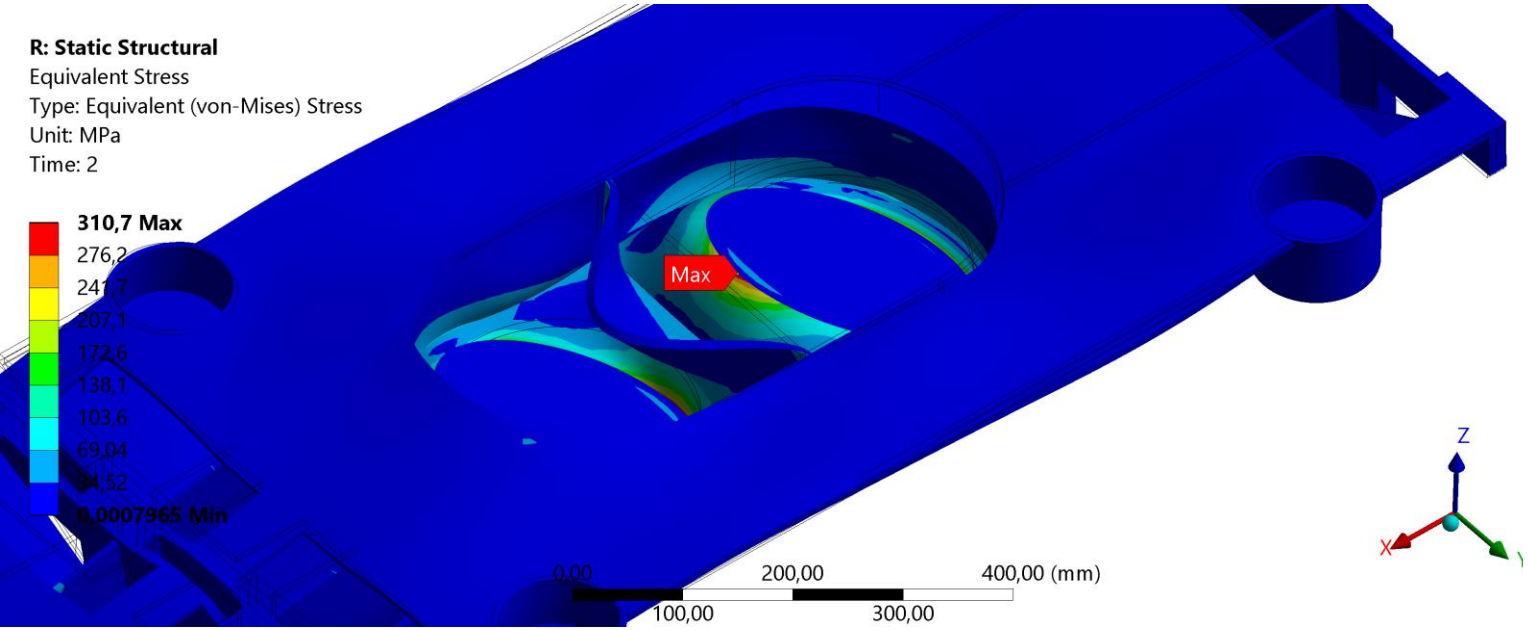

Type of simulations		Maximum	
		Stress	Displacements
S1	S1.x	311 MPa	0.21 mm
	S1.y	97 MPa	0.20 mm
	S1.z	53 MPa	0.16 mm

A peak stress of 311 MPa occur on the point mass attachment.

This stress is due to the stiffness of the link between the G11 interface surfaces and the points.

(*316L stress limit at 200 MPa*0.8 = 160 MPa*)

Strongback Results – Quasi static simulations

S1.x | Stress

Links between the G11 interfaces on the strongback and the mass point

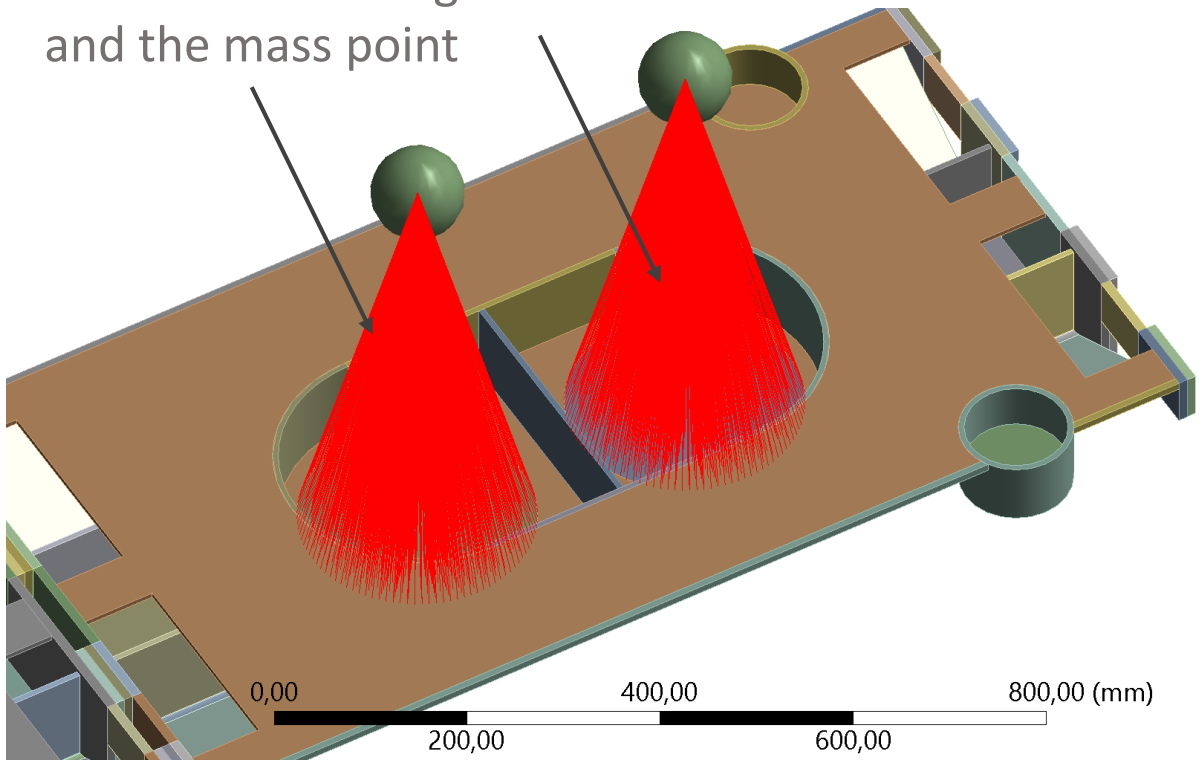

Type of simulations		Maximum	
		Stress	Displacements
S1	S1.x	311 MPa	0.21 mm
	S1.y	97 MPa	0.20 mm
	S1.z	53 MPa	0.16 mm

A peak stress of 311 MPa occur on the point mass attachment.

This stress is due to the stiffness of the link between the G11 interface surfaces and the points.

(*316L stress limit at 200 MPa*0.8 = 160 MPa*)

Strongback Results – Modal simulations

		Frequency	Effective mass		
			X	Y	Z
S2	Mode 1	31.7 Hz	0.00%	53.3%	0.00%
	Mode 2	31.9 Hz	0.00%	0.11%	0.00%
	Mode 3	32.0 Hz	0.00%	1.60%	0.00%
	Mode 4	40.8 Hz	0.61%	0.00%	0.57%

Mode 1

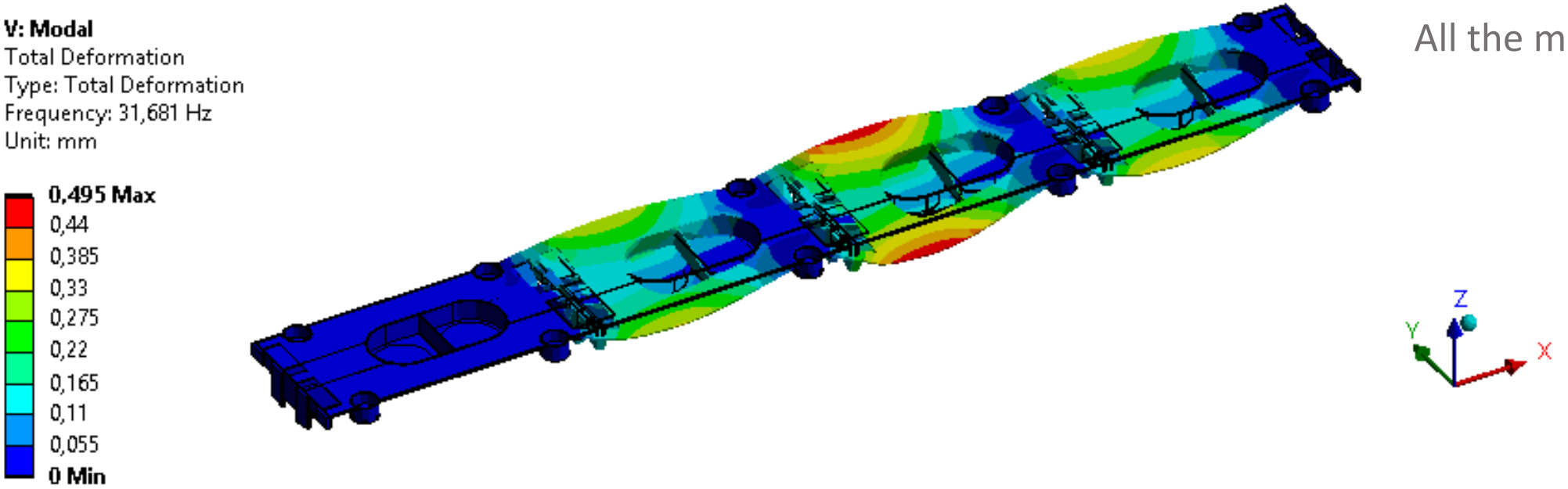

All the modes are over 30Hz

Overview of the cryomodule

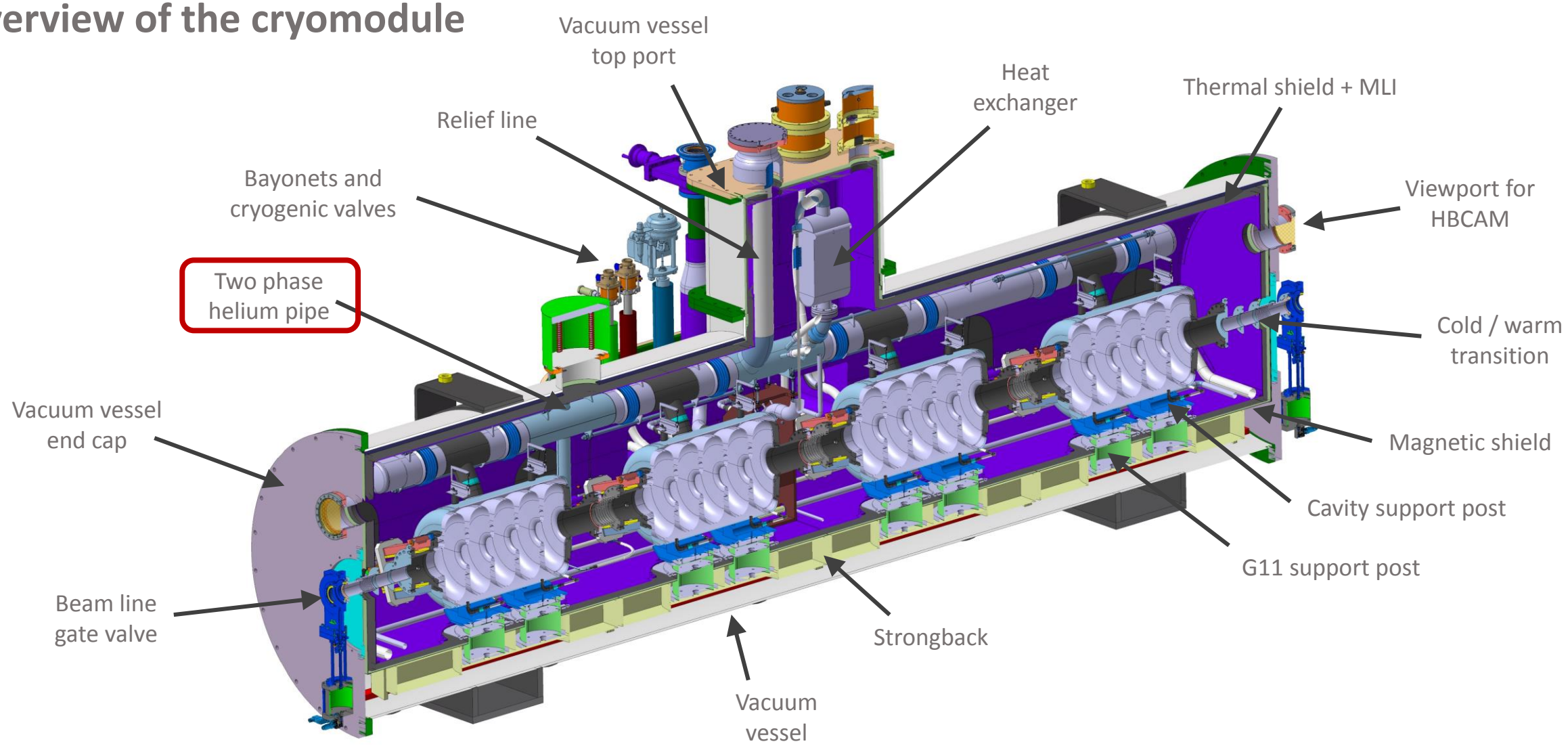

Two-phase pipes boundary simulations

- The Heat Exchanger and the relief line are removed.
- G11 support fixed to the thermal shield.
- Bushings with the corresponding stiffness are used for the modelling of the bellows.
- The cavity T tubes are represented and their bases are fixed.
- Stops on the cavity lugs are used as presented previously.

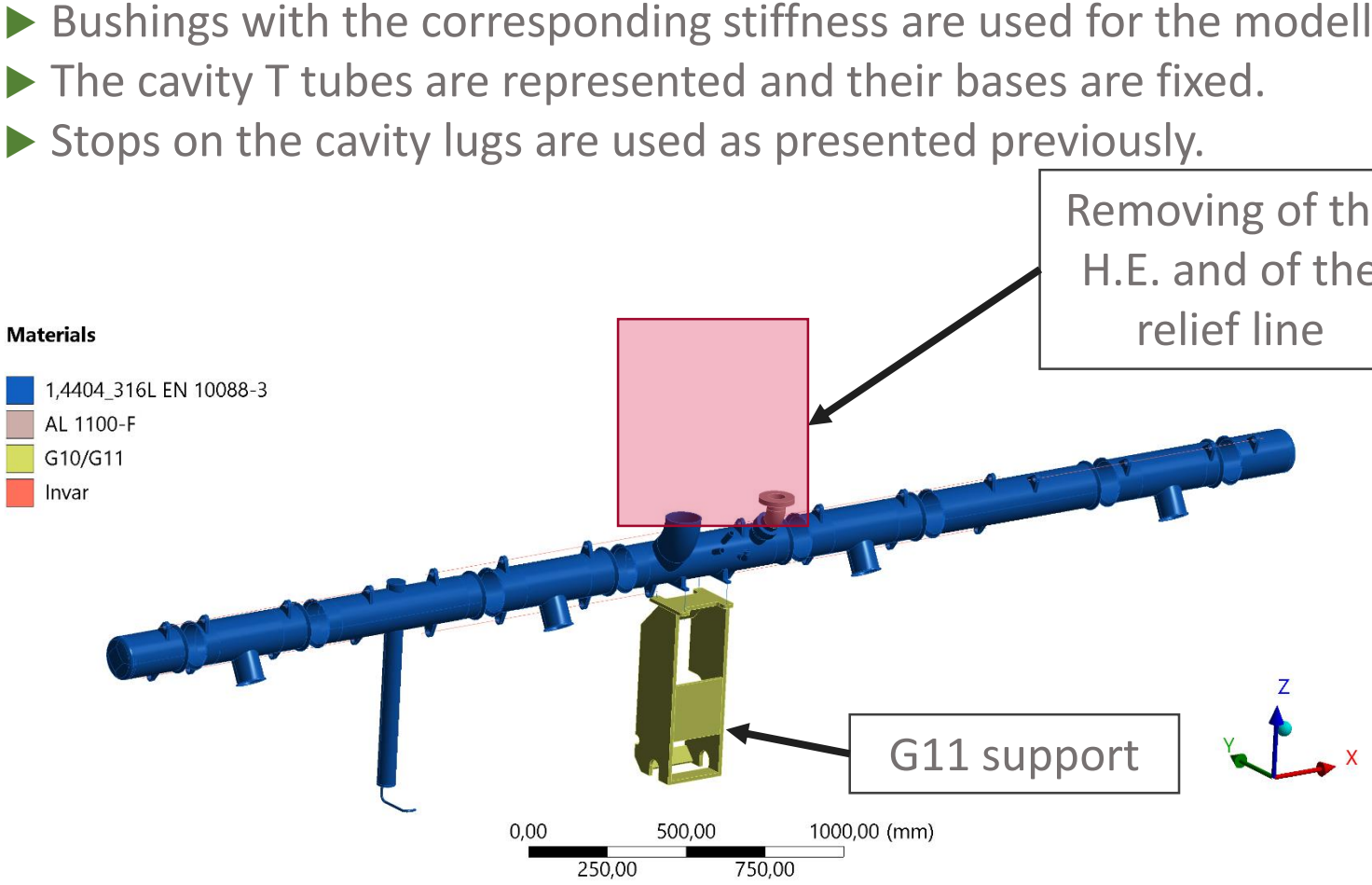

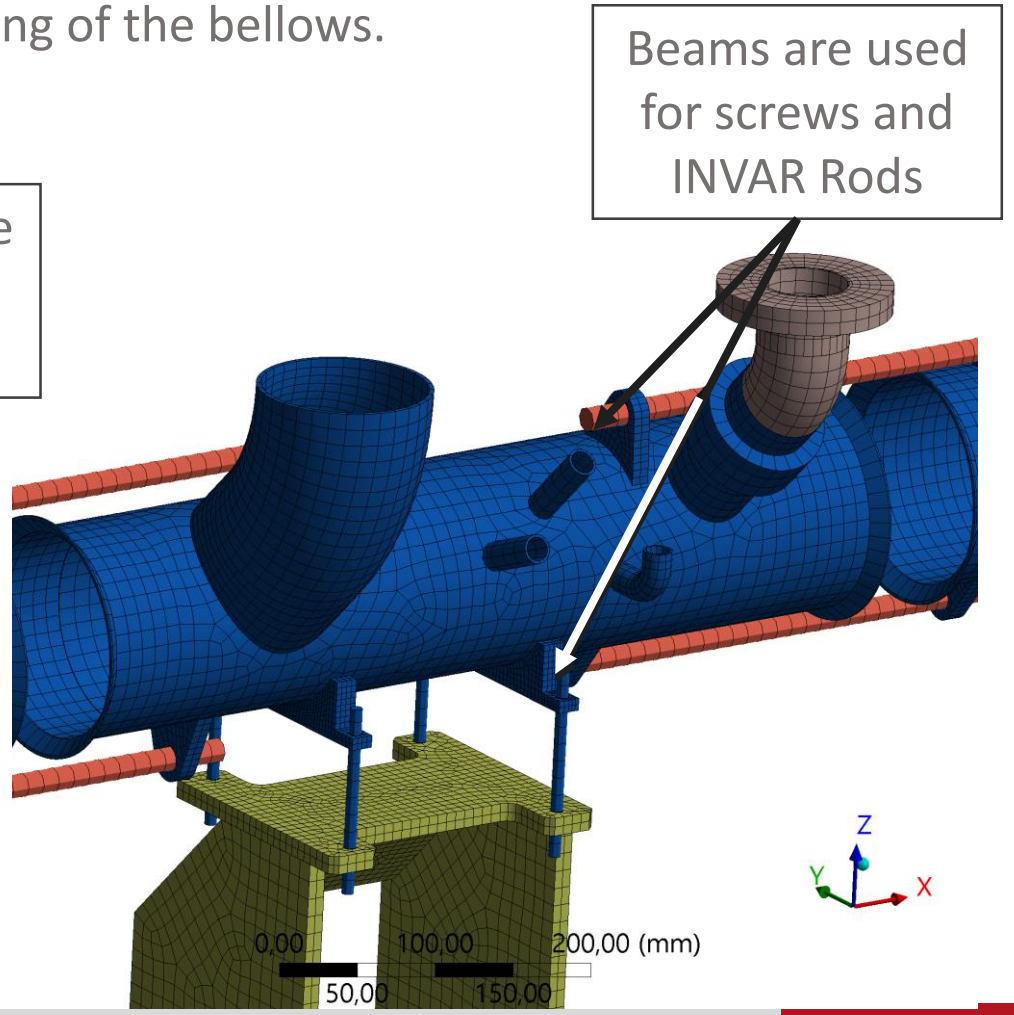

Two-phase pipes boundary simulations

- The Heat Exchanger and the relief line are removed.
- G11 support fixed to the thermal shield.
- Bushings with the corresponding stiffness are used for the modelling of the bellows.
- The cavity T tubes are represented and their bases are fixed.
- Stops on the cavity lugs are used as presented previously.

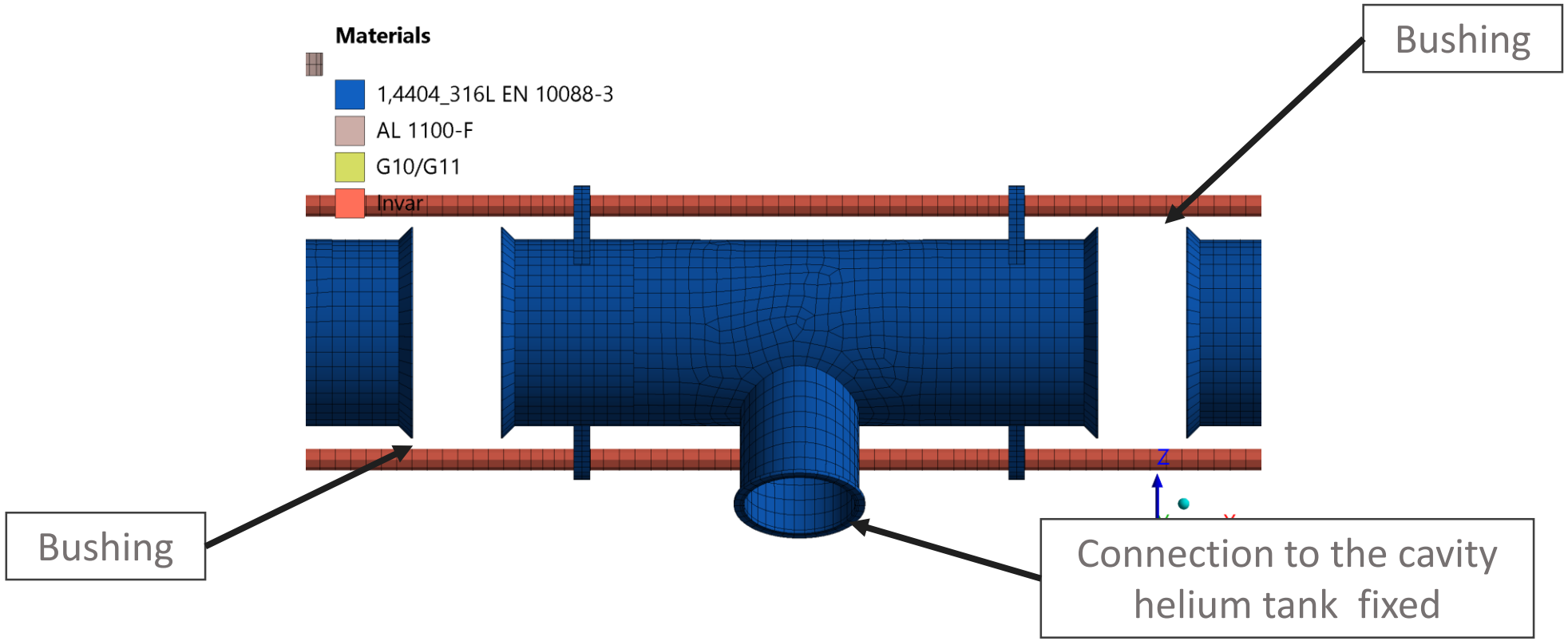

Two-phase pipes boundary simulations

- The Heat Exchanger and the relief line are removed.
- G11 support fixed to the thermal shield.
- Bushings with the corresponding stiffness are used for the modelling of the bellows.
- The cavity T tubes are represented and their bases are fixed.
- Stops on the cavity lugs are used as presented previously.

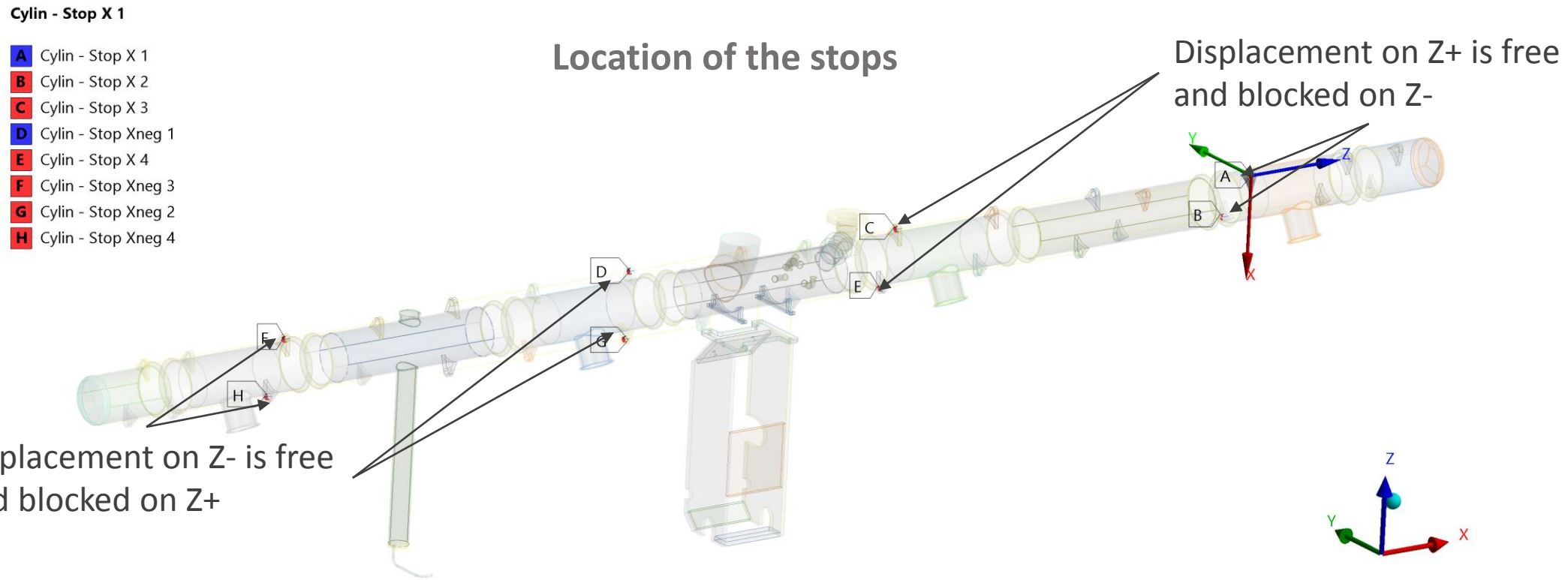

Two-phase pipes Results – Quasi static simulations

S1.x | Deformations

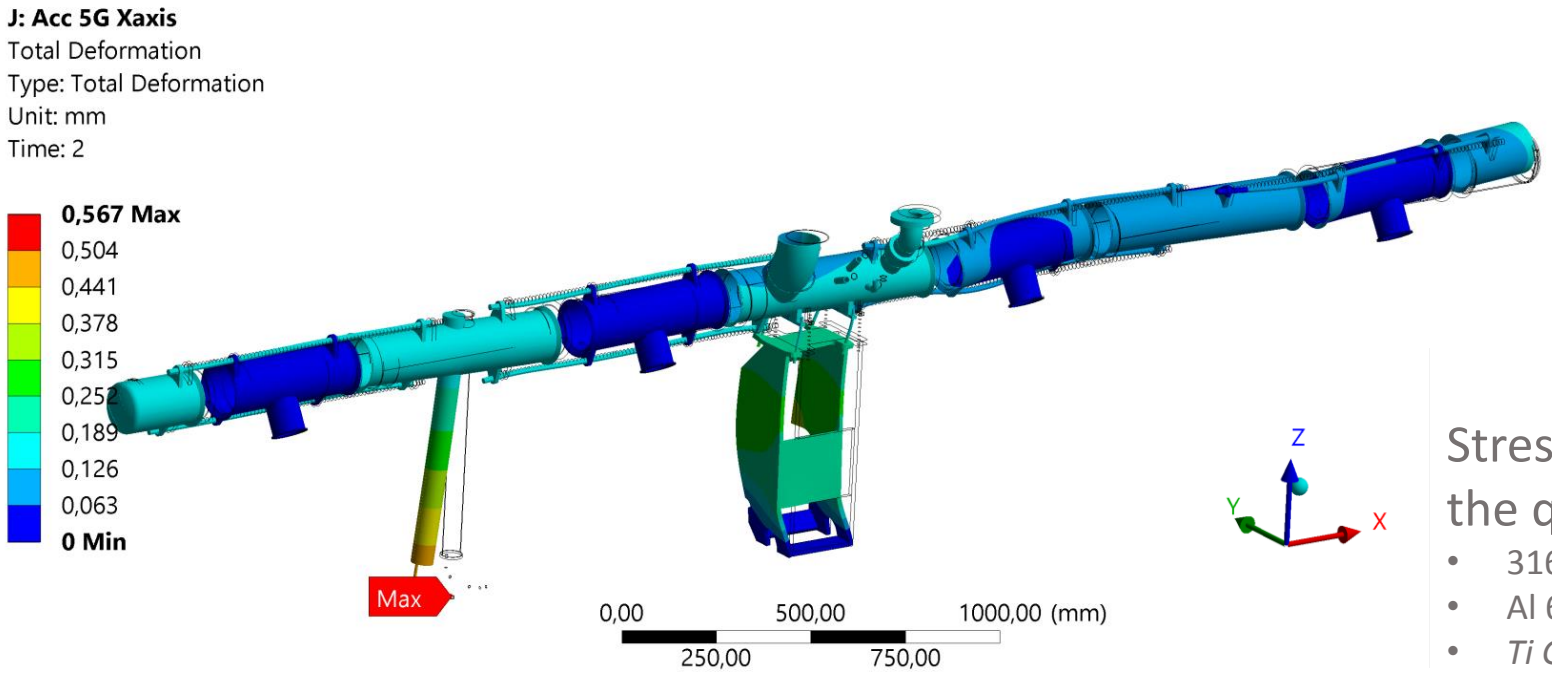

Type of simulations		Maximum	
		Stress	Displacements
S1	S1.x	50MPa	0.6mm
	S1.y	28MPa	0.2mm
	S1.z	38MPa	0.3mm

Stress and displacements are acceptable for the quasi-static acceleration simulations.

- 316L *stress limit at 200MPa*0.8 =* *160MPa*
- Al 6061-T6 *stress limit at 240MPa*0.8 =* *192MPa*
- *Ti Grd2 stress limit at 275MPa*0.8 =* *220MPa*
- *INVAR stress limit at 276MPa*0.8=* *220MPa*

Beam stress for all S1 simulations <33MPa

Two-phase pipes Results – Modal simulations

		Frequency	Effective mass		
			X	Y	Z
S2	Mode 1	38,7 Hz	0.00%	0.00%	0.46%
	Mode 2	41,2 Hz	0.05%	1.78%	0.78%
	Mode 3	46,4 Hz	0.02%	2.59%	0.06%
	Mode 4	51,2 Hz	0.00%	40.3%	4.33%

Mode 4

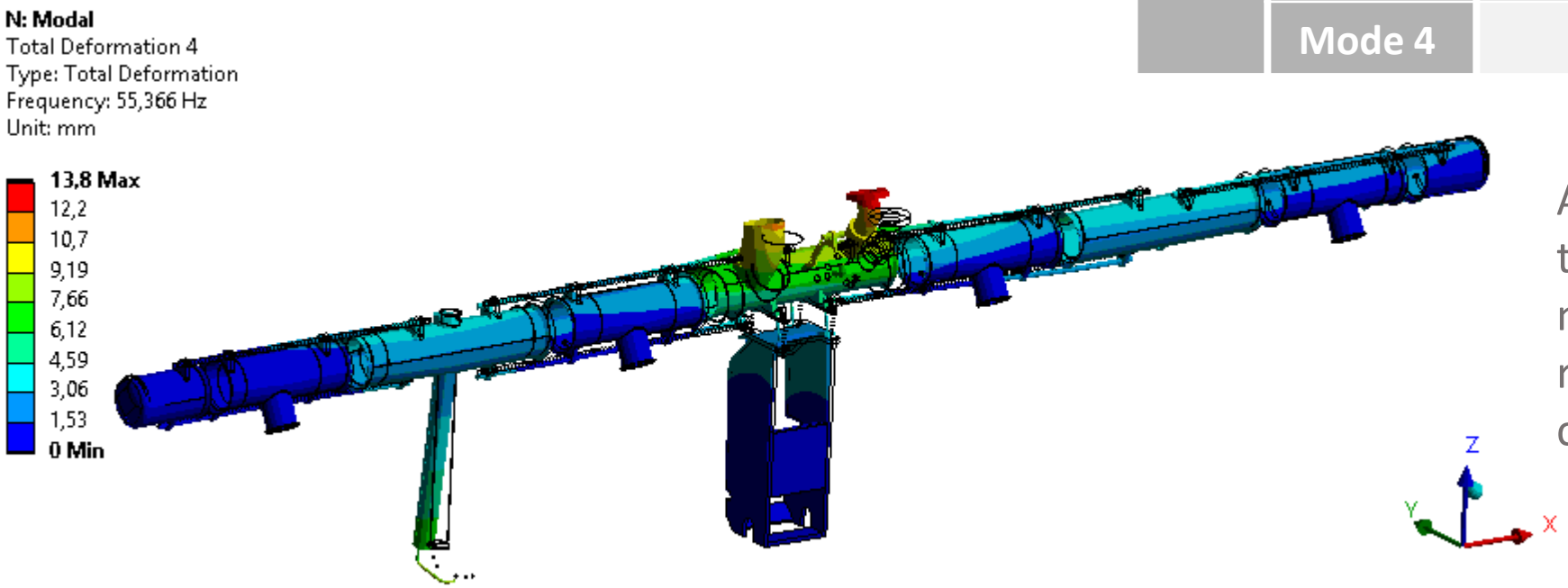

All the modes are over 30Hz and the mode 4 have an effective mass of 40.3% due to the resonance of the two-phase pipe central part

Overview of the cryomodule

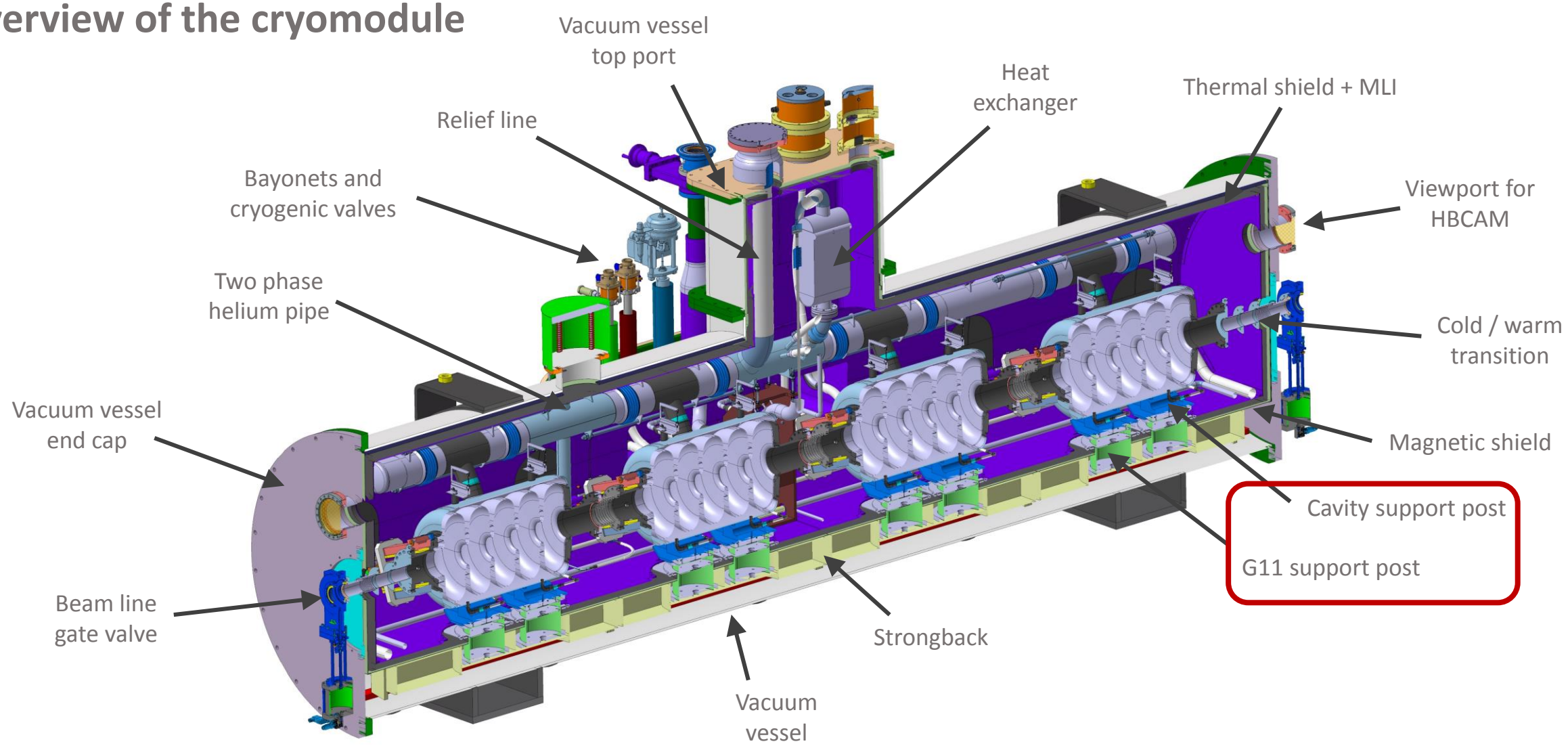

Cavity posts and G11 posts boundary conditions

- Interfaces with the strongback is fixed
- A mass of 210kg is connected to the C-Shaped elements. The point mass corresponds to an equipped cavity and is located in the center between the two post and along the beam axis.

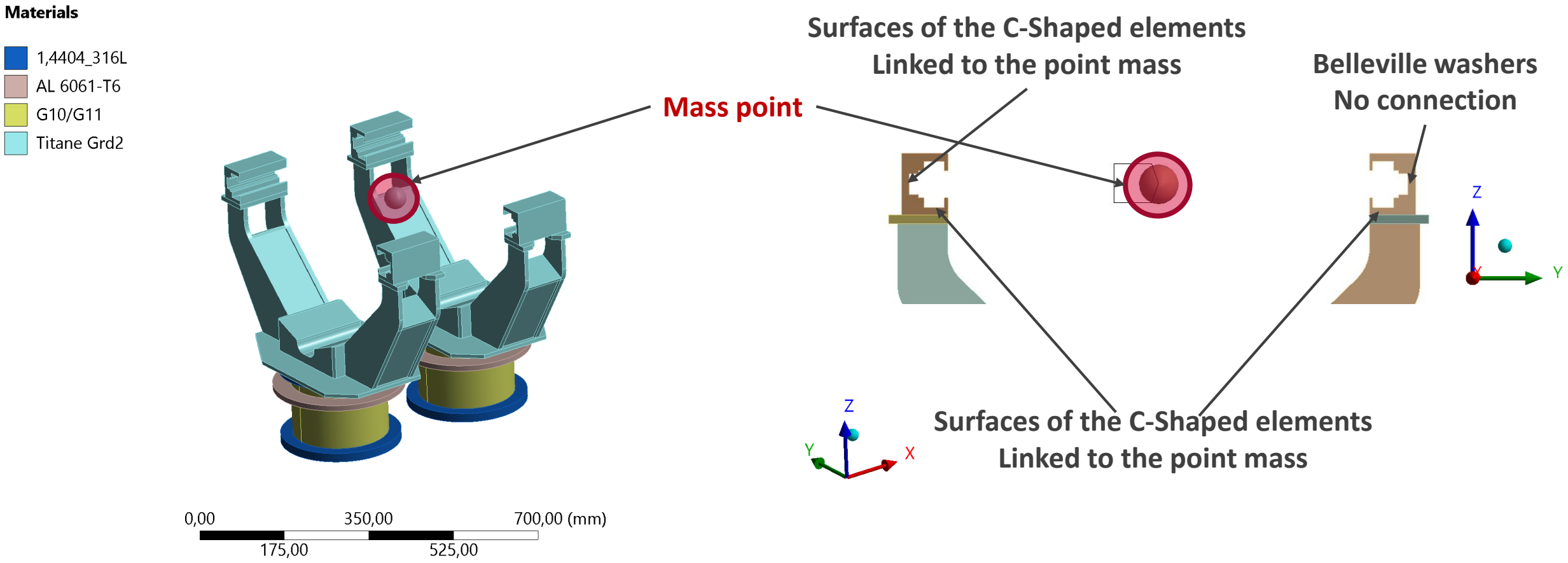

Cavity posts and G11 posts – Quasi static simulations

S1.x | Deformations

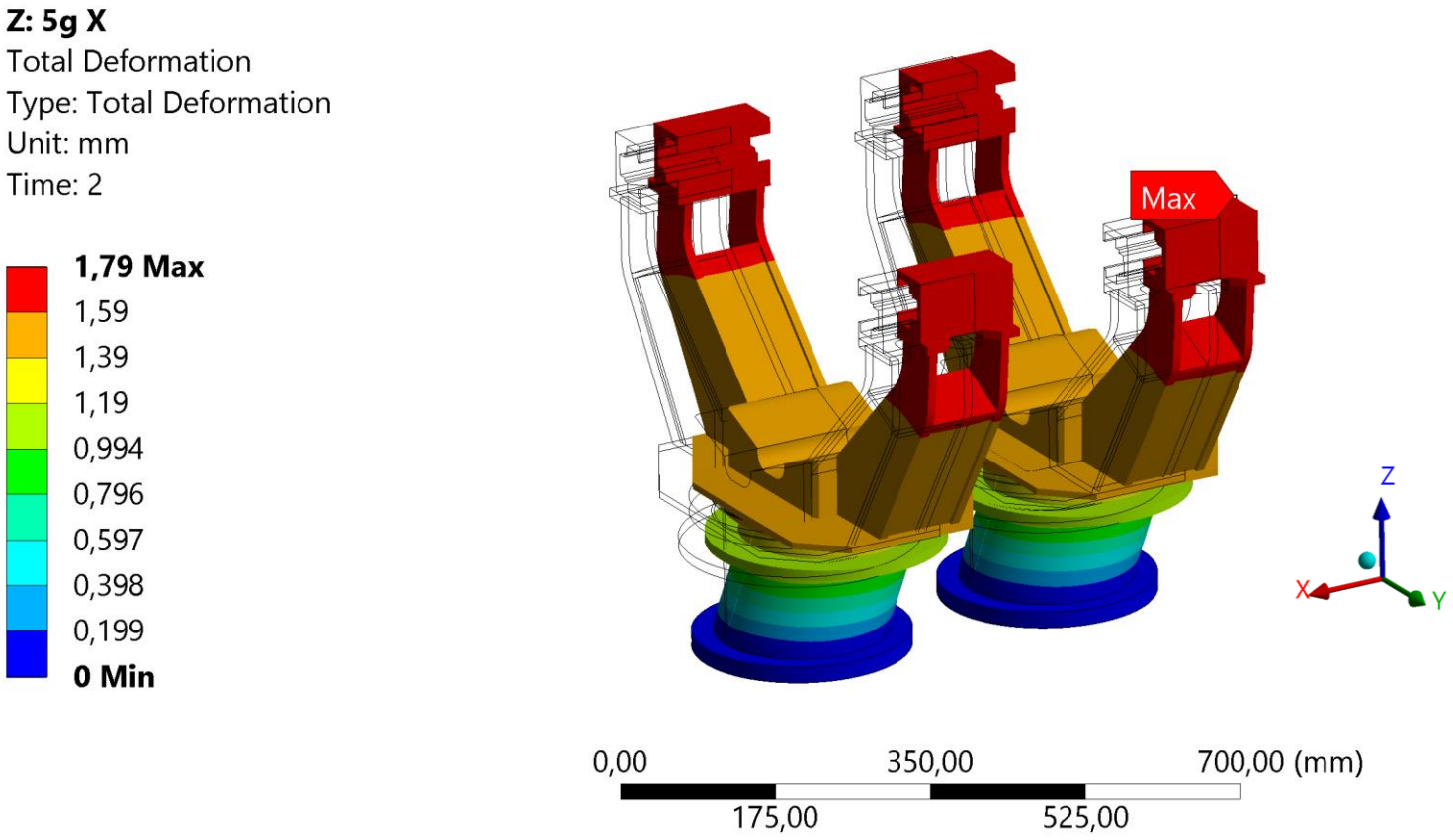

Type of simulations		Maximum	
		Stress	Displacements
S1	S1.x	80MPa	1.8mm
	S1.y	11MPa	0.6mm
	S1.z	8MPa	0.03mm

For the quasi-static acceleration simulations the stress and deformations are acceptable.

- Minimal *G11 stress limit at 152MPa*0.8 = 122MPa*
- 316L *stress limit at 200MPa*0.8 = 160MPa*
- Al 6061-T6 *stress limit at 240MPa*0.8 = 192MPa*
- *Ti Grd2 stress limit at 275MPa*0.8 = 220MPa*

Cavity posts and G11 posts – Quasi static simulations

S1.x | Deformations

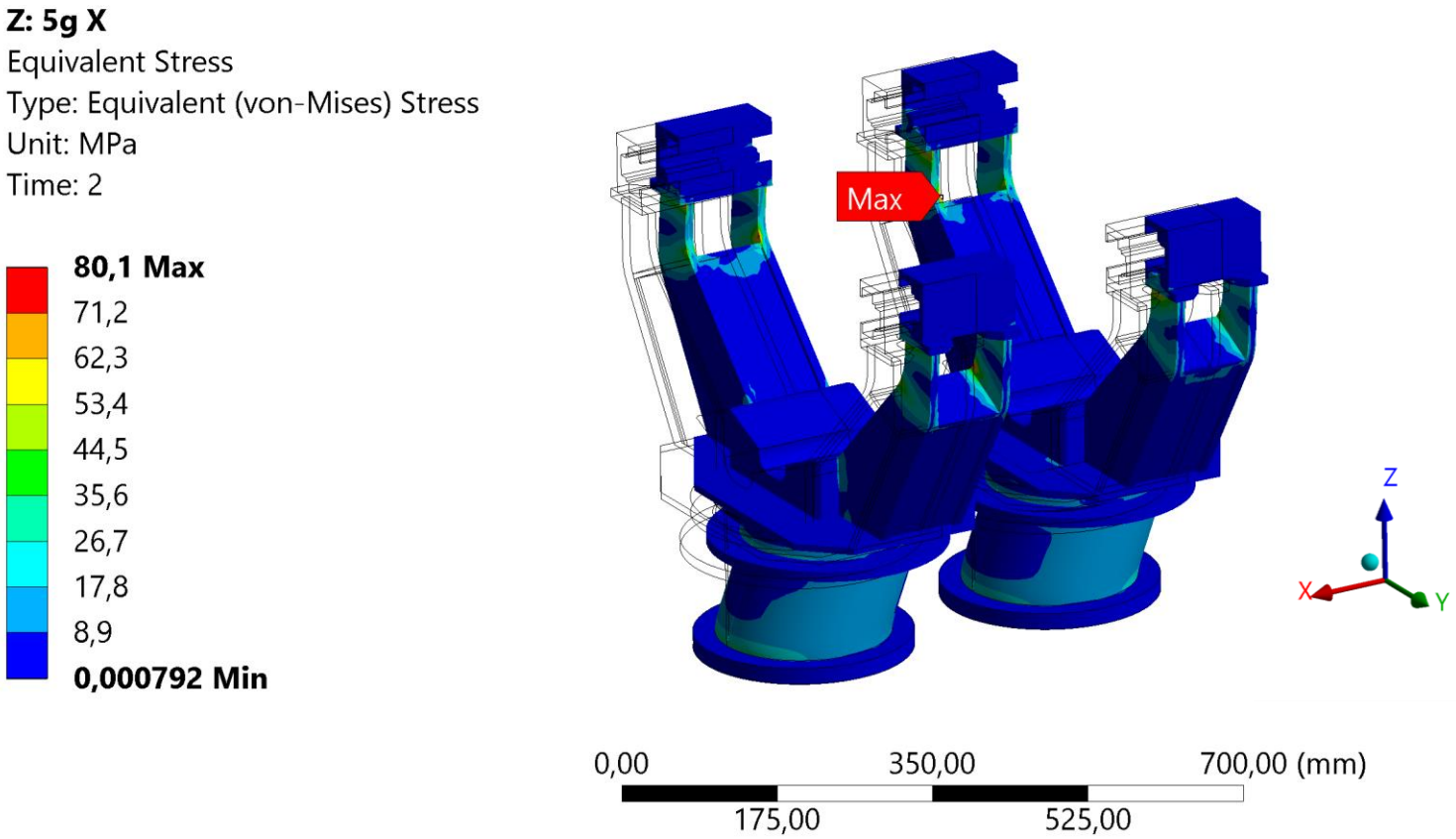

Type of simulations		Maximum	
		Stress	Displacements
S1	S1.x	80MPa	1.8mm
	S1.y	11MPa	0.6mm
	S1.z	8MPa	0.03mm

For the quasi-static acceleration simulations the stress and deformations are acceptable.

- Minimal *G11 stress limit at 152MPa*0.8 = 122MPa*
- 316L *stress limit at 200MPa*0.8 = 160MPa*
- Al 6061-T6 *stress limit at 240MPa*0.8 = 192MPa*
- *Ti Grd2 stress limit at 275MPa*0.8 = 220MPa*

Cavity posts and G11 posts – Modal simulations

Mode 1

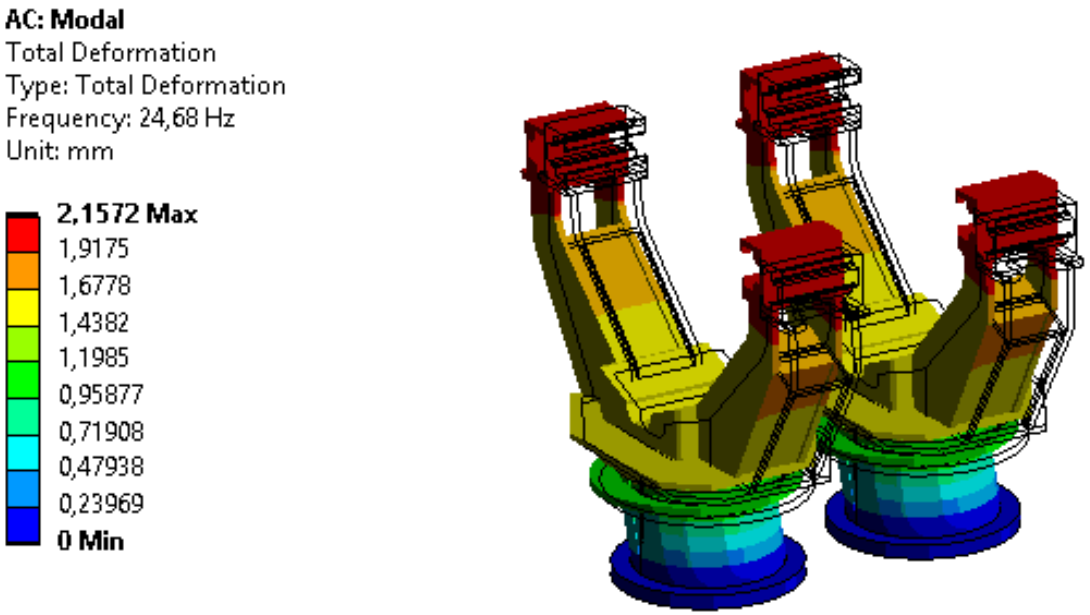

		Frequency	Effective mass		
			X	Y	Z
S2	Mode 1	24.7 Hz	0.03%	93.2%	0.00%
	Mode 2	27.0 Hz	94.2%	0.03%	0.00%
	Mode 3	103.8 Hz	0.00%	0.00%	0.00%
	Mode 4	138.5 Hz	0.00%	1.57%	0.01%

The two first modes are close to the target of 30 HZ

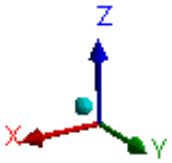

Cavity posts and G11 posts – Modal simulations

Mode 2

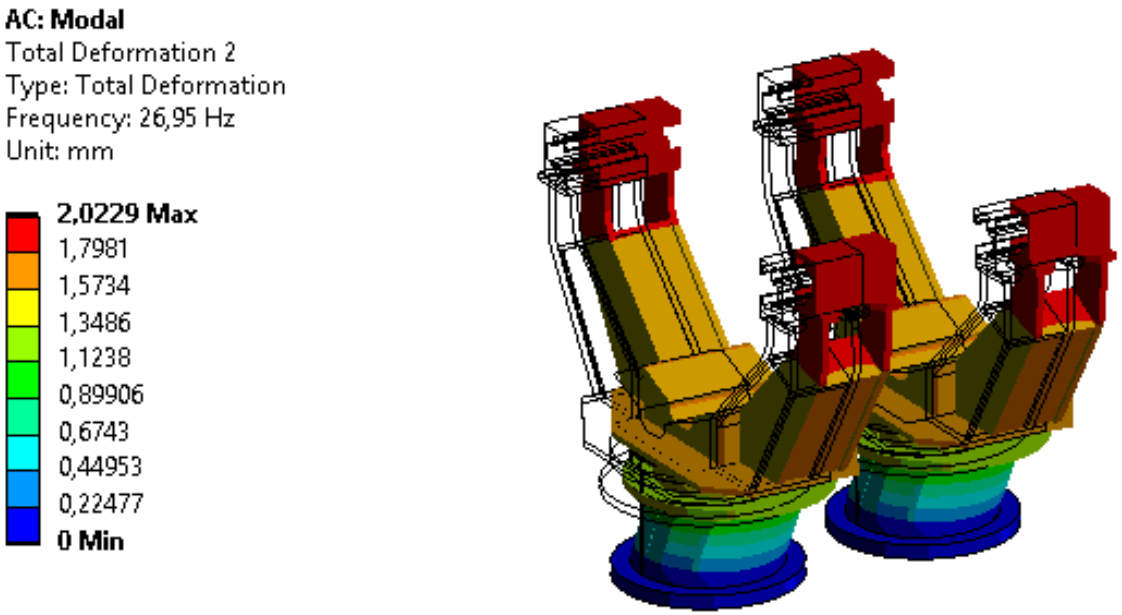

		Frequency	Effective mass		
			X	Y	Z
S2	Mode 1	24.7 Hz	0.03%	93.2%	0.00%
	Mode 2	27.0 Hz	94.2%	0.03%	0.00%
	Mode 3	103.8 Hz	0.00%	0.00%	0.00%
	Mode 4	138.5 Hz	0.00%	1.57%	0.01%

The two first modes are close to the target of 30 HZ

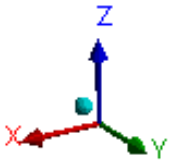

Overview of the cryomodule

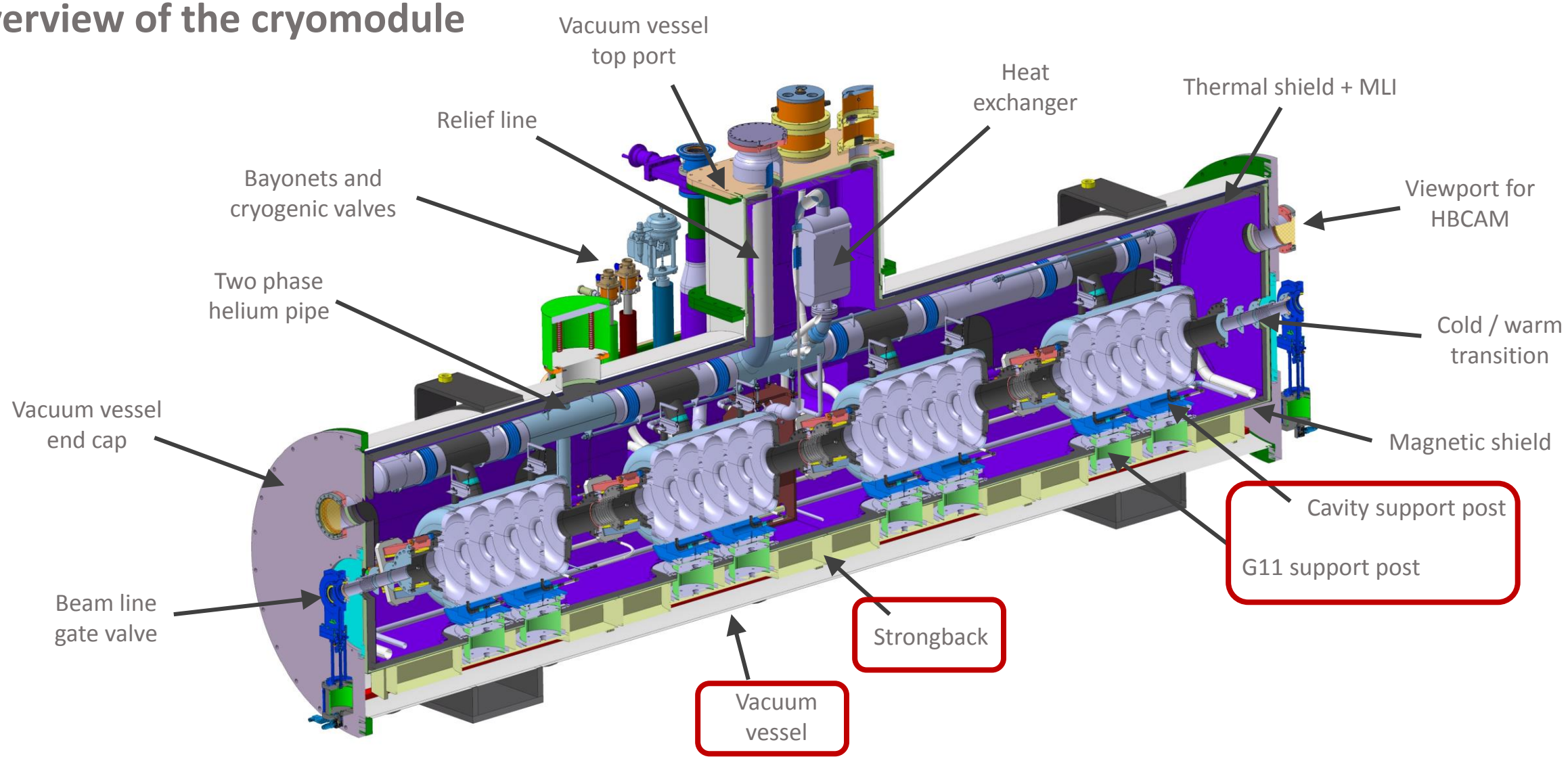

Test with a model with Vacuum vessel, strongback and cavity posts

- Ground interfaces are fixed
- A mass of 105kg is connected to the C-Shaped elements. The point mass corresponds to half of an equipped cavity and is located in the center between the two post and along the beam axis.
- A mass of 500kg is attached to the strongback upper part in order to represent the cold mass mass.

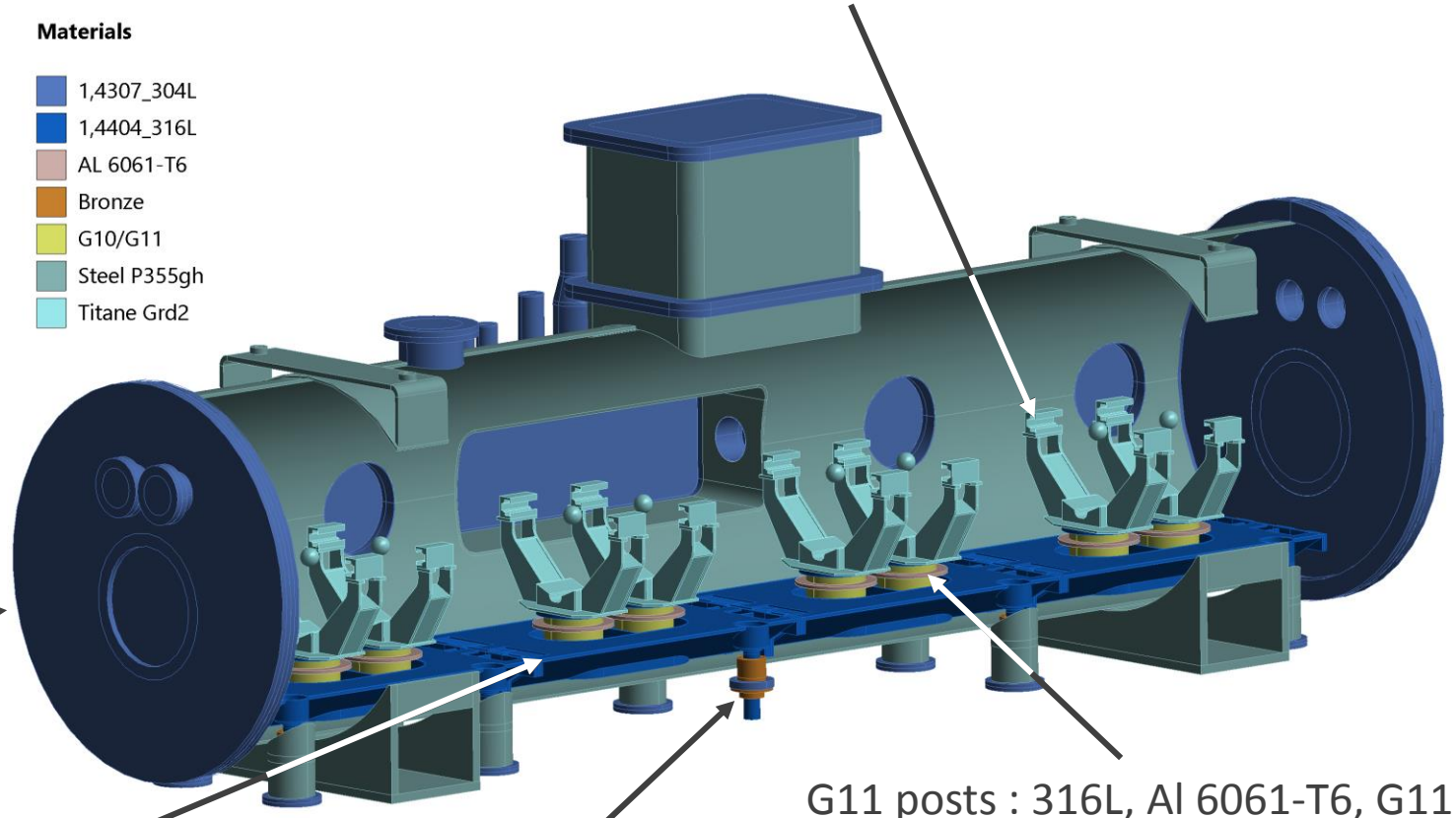

Cavity post and C shaped elements : Titanium Grade 2

Vacuum vessel : 304L and P355gh

G11 posts : 316L, Al 6061-T6, G11

Strongback : 316L

Studs : 316L and Bronze

Cavity posts and G11 posts – Quasi static simulations

S1.x | Deformations

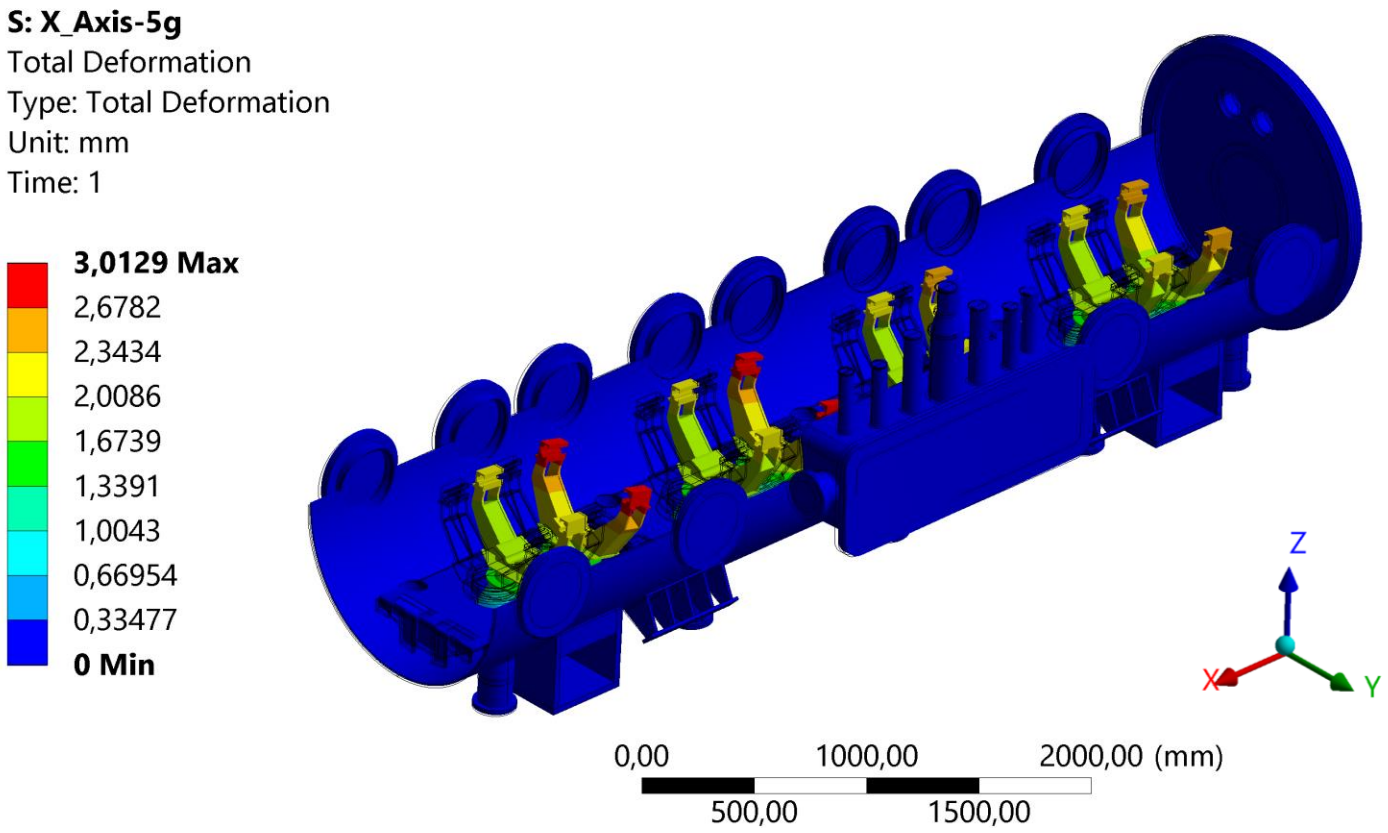

Type of simulations		Maximum	
		Stress	Displacements
S1	S1.x	117 MPa	3.0 mm
	S1.y	92 MPa	2.1 mm
	S1.z	76 MPa	1.6 mm

Stress is acceptable on the different components. **S1.x** simulation shows a longitudinal displacement of 3mm for all the cavity posts.
Thus, as the inter-cavity bellows as a axial stroke of +/-6.0mm and a radial stroke of 3.0mm the cavity displacements are acceptable.

Cryomodule – Modal simulations

		Frequency	Effective mass		
			X	Y	Z
S2	Mode 1	20.2 Hz	0.00%	42.1%	0.55%
	Mode 2	20.9 Hz	0.13%	8.57%	0.02%
	Mode 3	21.4 Hz	0.02%	2.85%	0.00%
	Mode 4	22.1 Hz	1.10%	0.00%	0.02%
	Mode 5	22.2 Hz	15.1%	0.14%	0.00%
	Mode 6	22.3 Hz	0.36%	0.02%	0.00%

Mode 1

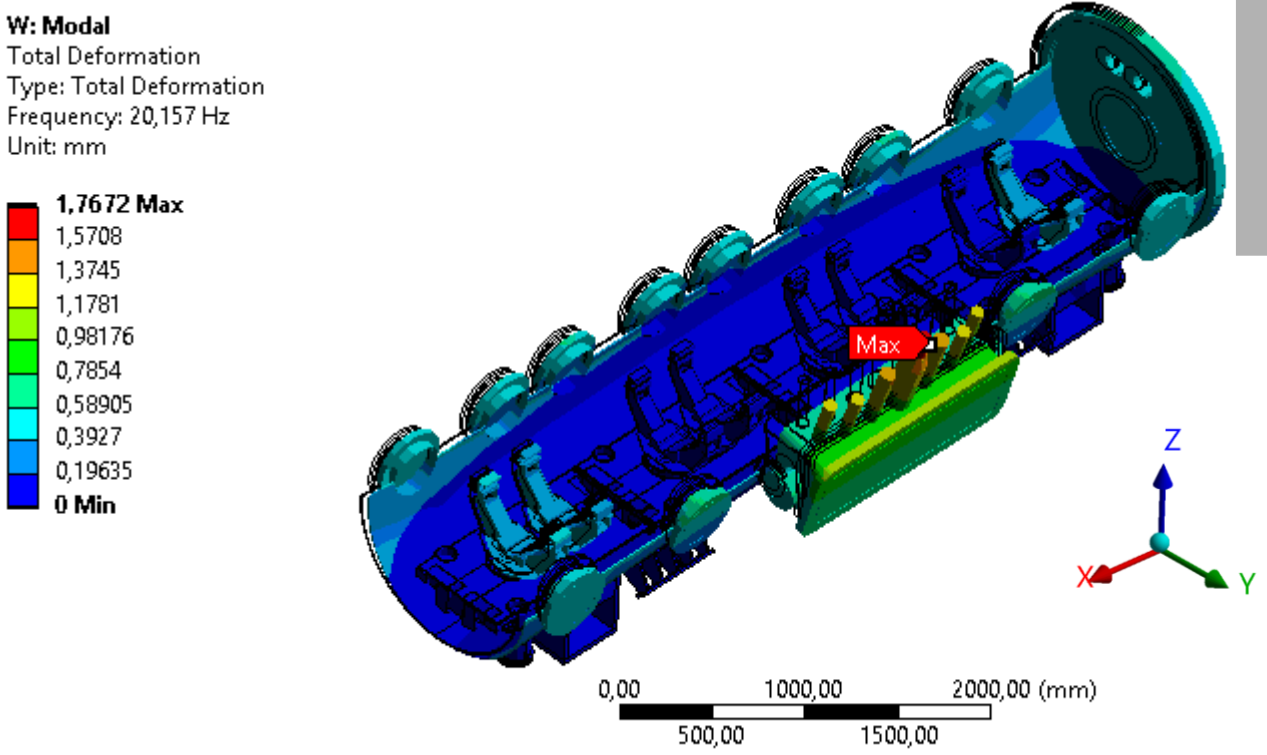

All the first six resonance frequencies are over 20Hz.
Due to the transportation frame isolation, resonance frequencies of the global model of the cryomodule can be over 20Hz
Thus, the current preliminary cryomodule design is acceptable for the modal analysis.

Cryomodule – Modal simulations

		Frequency	Effective mass		
			X	Y	Z
S2	Mode 1	20.2 Hz	0.00%	42.1%	0.55%
	Mode 2	20.9 Hz	0.13%	8.57%	0.02%
	Mode 3	21.4 Hz	0.02%	2.85%	0.00%
	Mode 4	22.1 Hz	1.10%	0.00%	0.02%
	Mode 5	22.2 Hz	15.1%	0.14%	0.00%
	Mode 6	22.3 Hz	0.36%	0.02%	0.00%

Mode 2

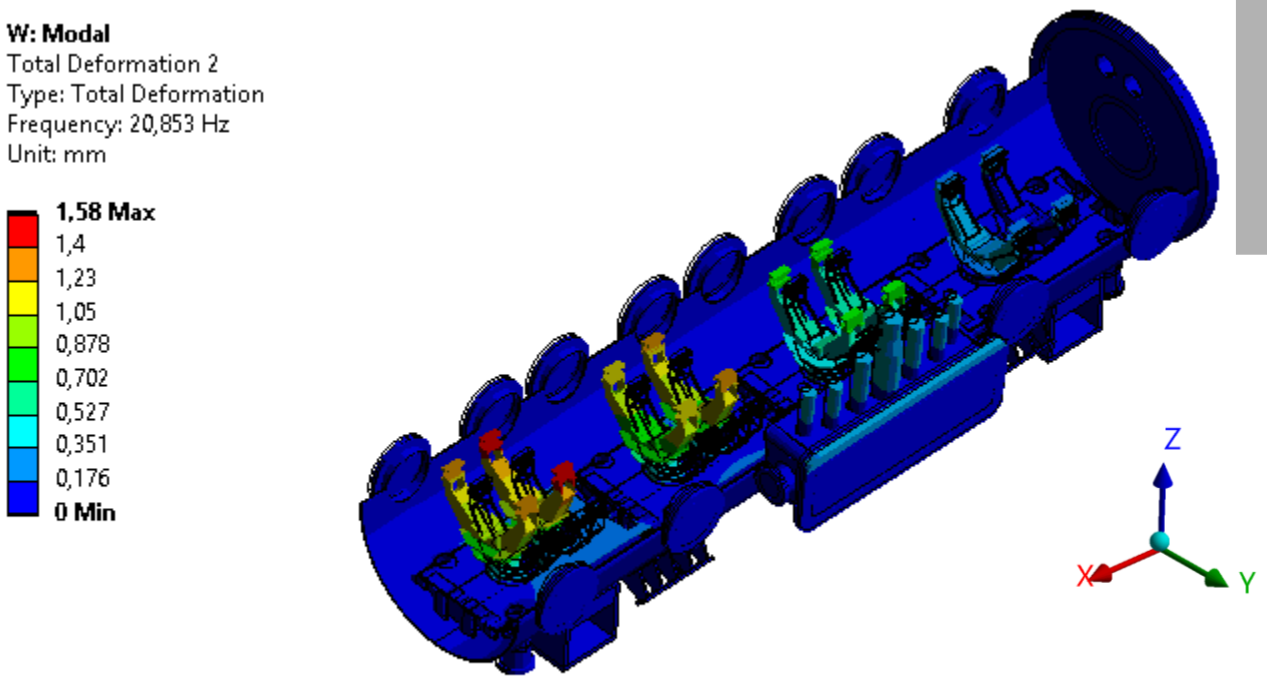

All the first six resonance frequencies are over 20Hz.
Due to the transportation frame isolation, resonance frequencies of the global model of the cryomodule can be over 20Hz
Thus, the current preliminary cryomodule design is acceptable for the modal analysis.

CONCLUSION

CONCLUSION

Summary

- Two types of simulations :
  - Quasi-static acceleration simulations (1.5g lateral, 3.0g vertical, 5.0g longitudinal).
  - Modal analysis :
    - For individual components : Resonance frequencies have to be over 30Hz
    - For global cryomodule : Resonance frequencies have to be over 20Hz
- Individual studies of the following components were performed :
  - Vacuum vessel,
  - Strongback,
  - Cavity posts,
  - Two-phase pipes.
- Global studies were performed taking into account the vacuum vessel, strongback and G11 and cavity posts. The resonance frequencies for the global studies is over 20Hz.

Further work

- Conception and simulations on the transport frame.
- Full cryomodule simulations taking into account the geometry of the critical components as cavities and couplers.

Merci de votre attention

Overview of the cryomodule

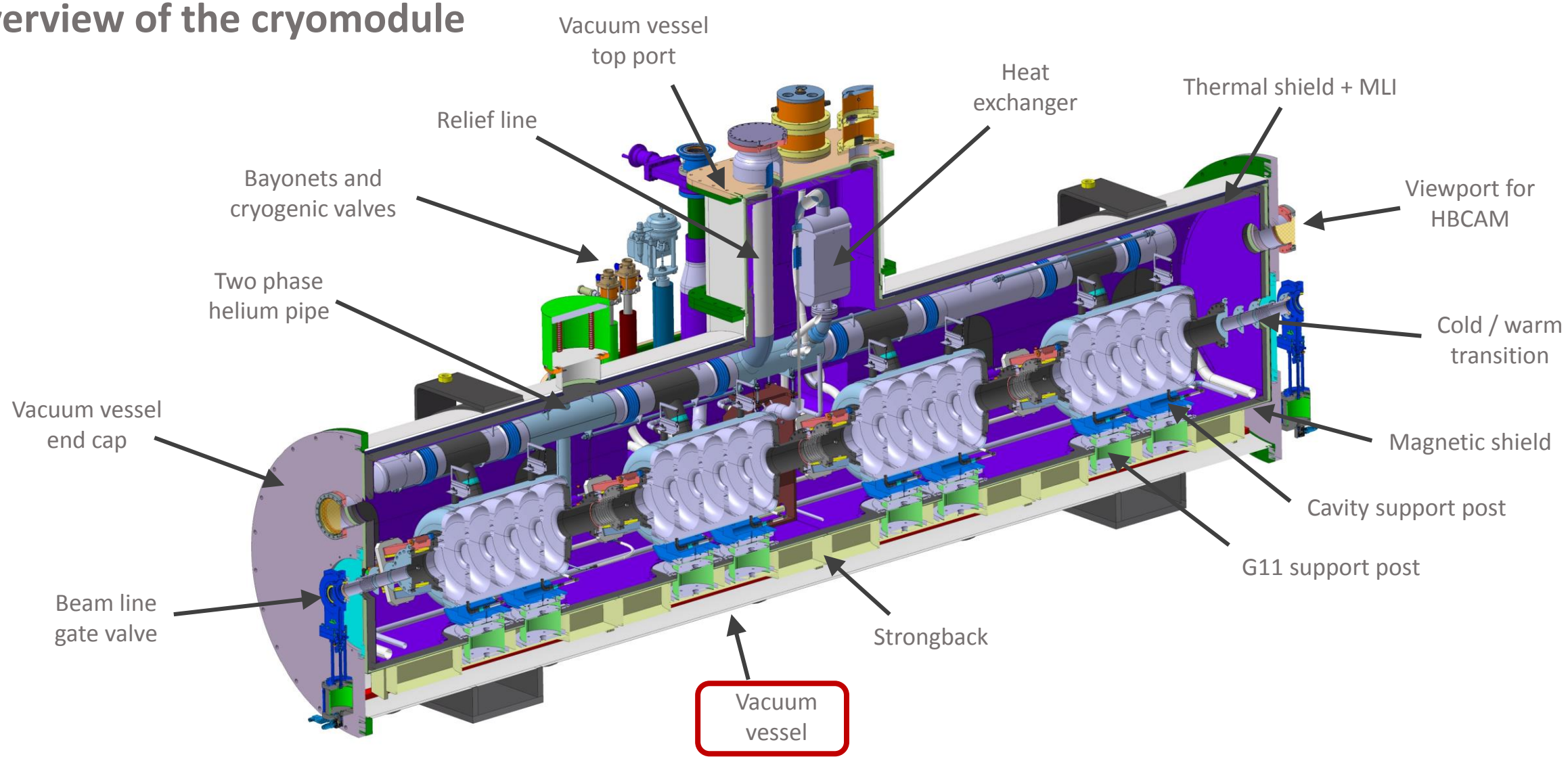

Vacuum vessel Results – Quasi static simulations

S1.y | Displacement

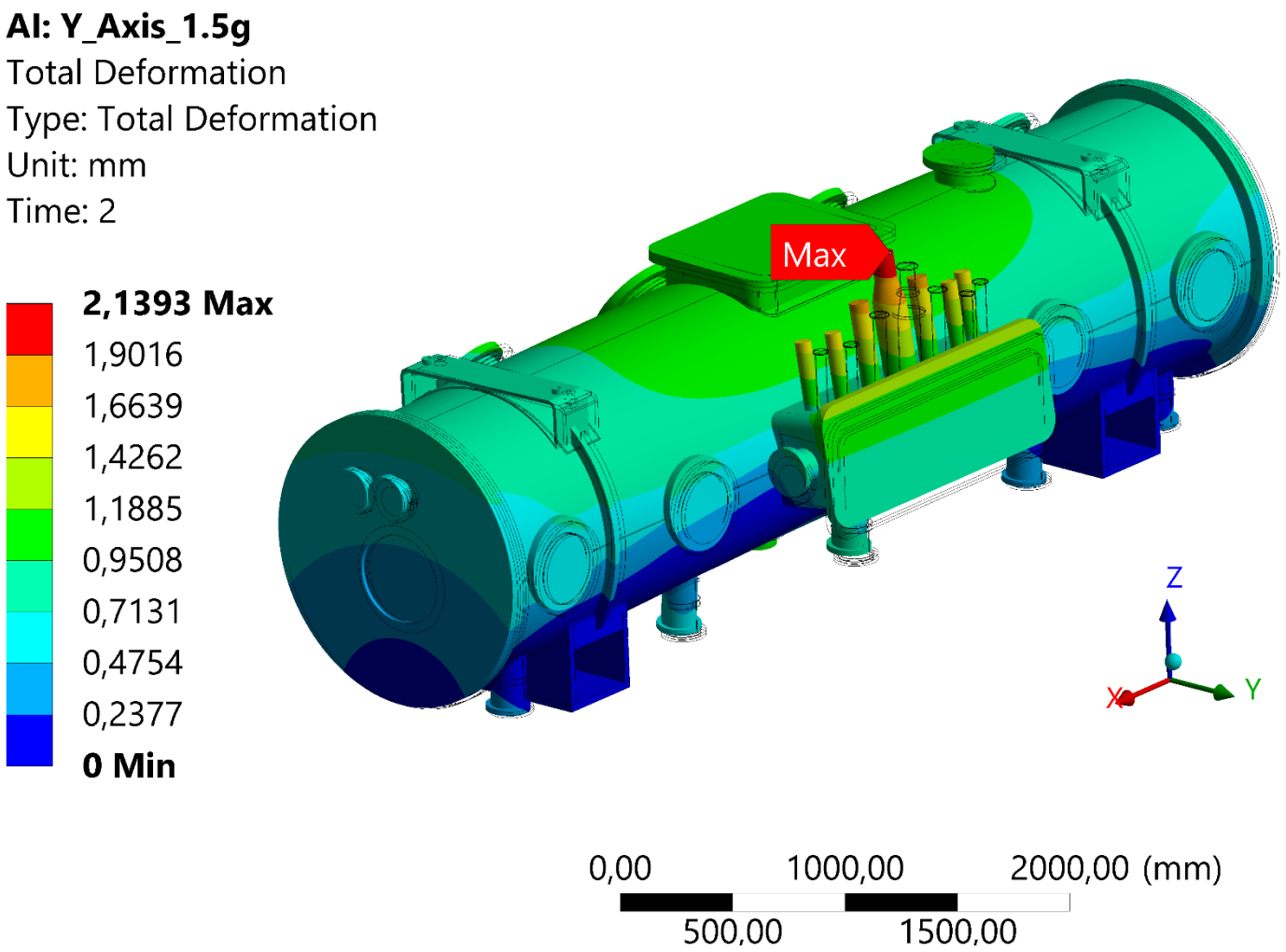

Type of simulations		Maximum	
		Stress	Displacements
S1	S1.x	226 MPa	0.6 mm
	S1.y	220 MPa	2.1 mm
	S1.z	92 MPa	1.7 mm

Stress and displacement are acceptable for the quasi-static acceleration simulations. (*P355gh Steel stress limit at 355MPa*0.8 = 284 MPa*)

Vacuum vessel Results – Quasi static simulations

S1.y | Stress

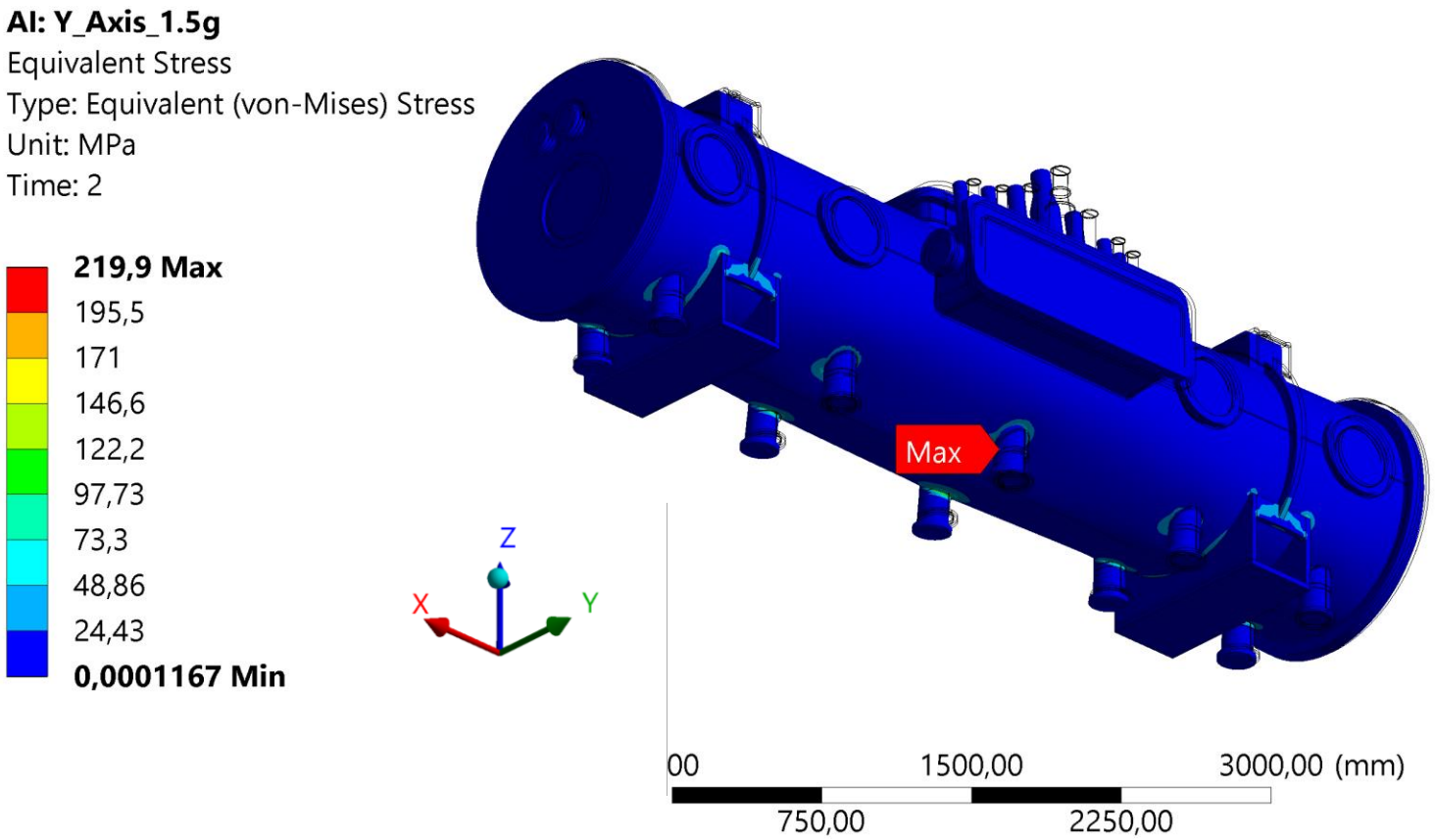

Type of simulations		Maximum	
		Stress	Displacements
S1	S1.x	226 MPa	0.6 mm
	S1.y	220 MPa	2.1 mm
	S1.z	92 MPa	1.7 mm

Stress and displacement are acceptable for the quasi-static acceleration simulations. (*P355gh Steel stress limit at 355MPa*0.8 = 284 MPa*)

Vacuum vessel Results – Quasi static simulations

S1.z | Displacement

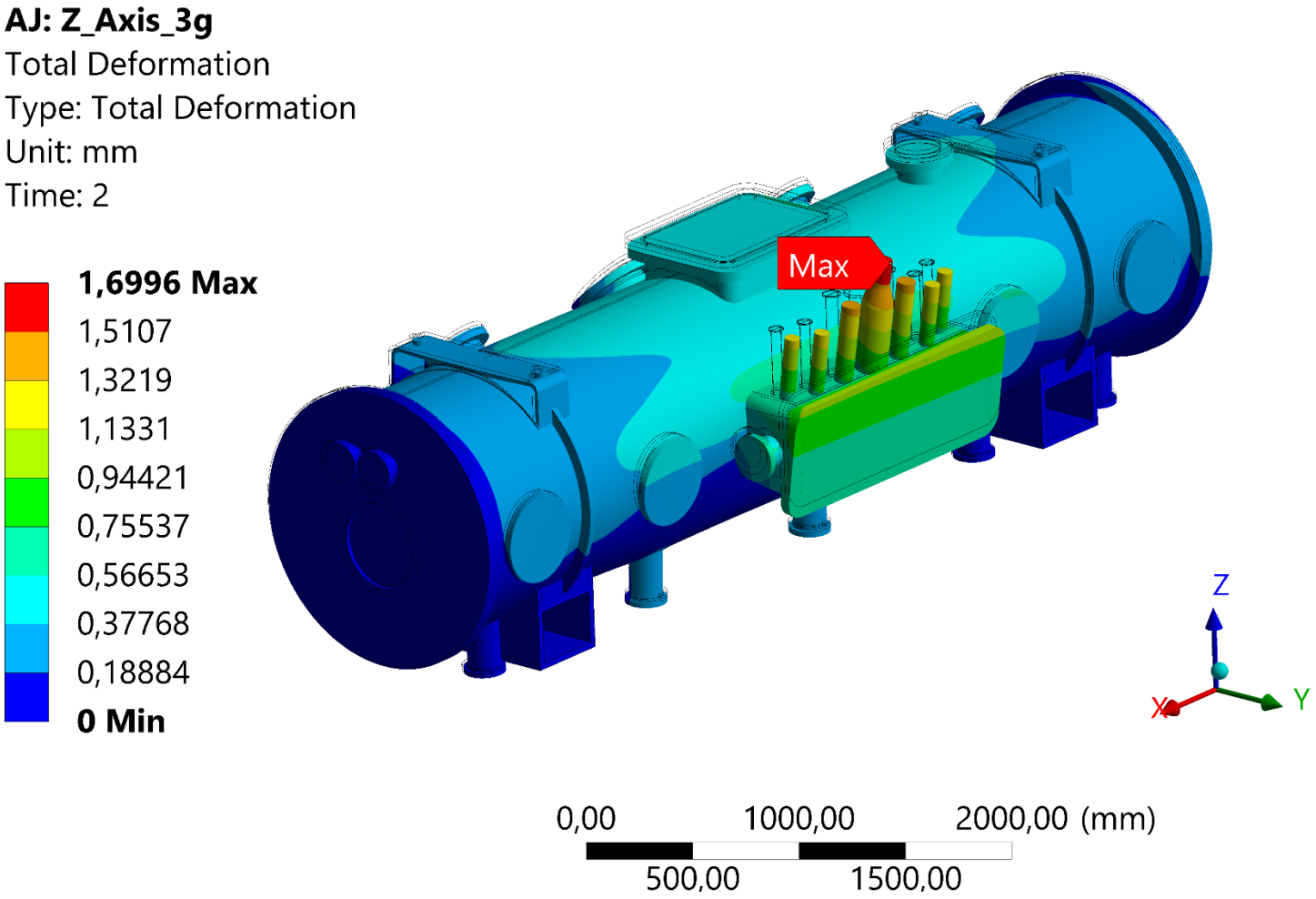

Type of simulations		Maximum	
		Stress	Displacements
S1	S1.x	226 MPa	0.6 mm
	S1.y	220 MPa	2.1 mm
	S1.z	92 MPa	1.7 mm

Stress and displacement are acceptable for the quasi-static acceleration simulations. (*P355gh Steel stress limit at 355MPa*0.8 = 284 MPa*)

Vacuum vessel Results – Quasi static simulations

S1.z | Stress

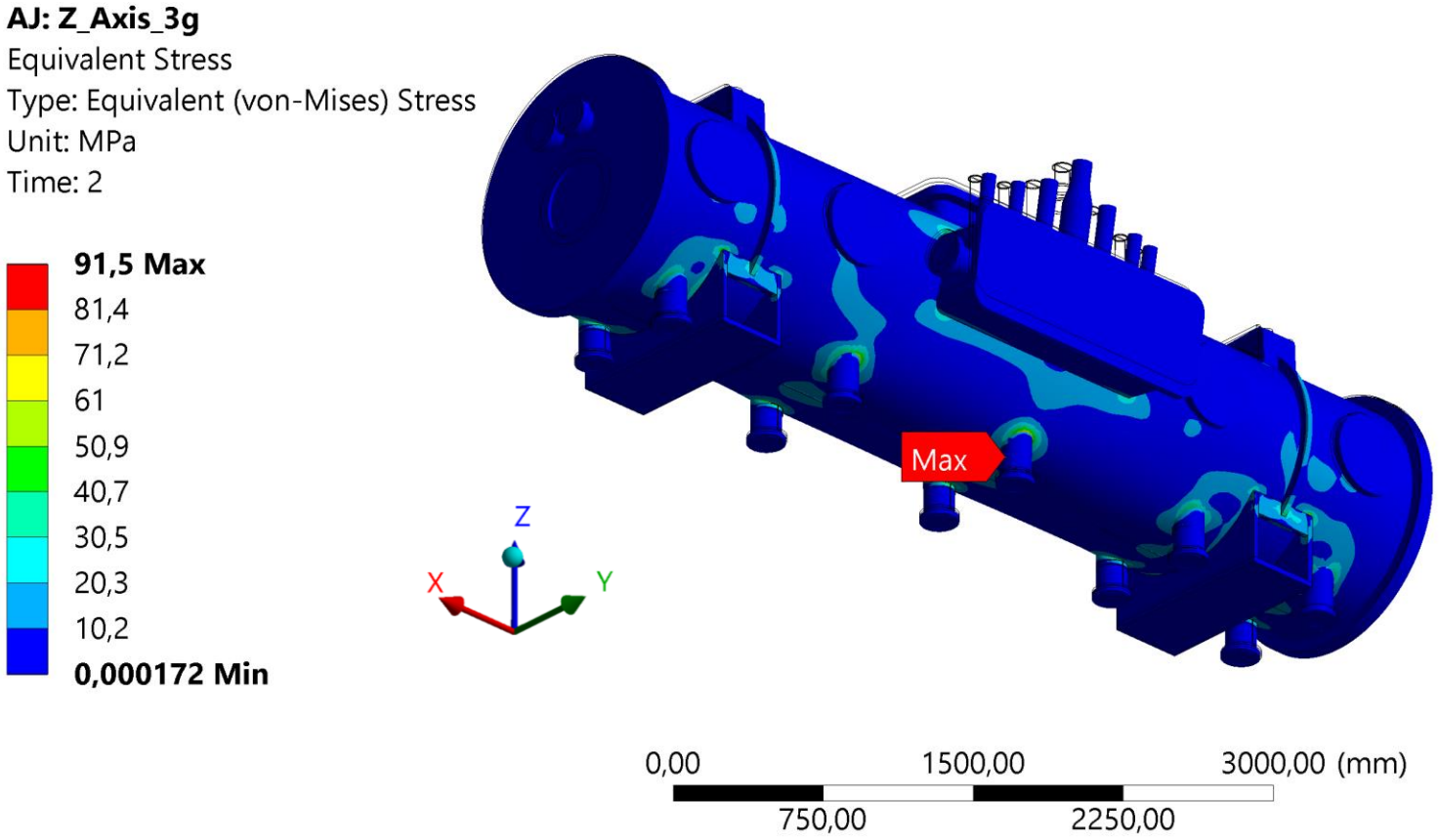

Type of simulations		Maximum	
		Stress	Displacements
S1	S1.x	226 MPa	0.6 mm
	S1.y	220 MPa	2.1 mm
	S1.z	92 MPa	1.7 mm

Stress and displacement are acceptable for the quasi-static acceleration simulations. (*P355gh Steel stress limit at 355MPa*0.8 = 284 MPa*)

Vacuum vessel results – Modal simulations

		Frequency	Effective mass		
			X	Y	Z
S2	Mode 1	18.5 Hz	0.00%	0.83%	0.09%
	Mode 2	20.4 Hz	0.00%	66.7%	0.47%
	Mode 3	34.4 Hz	0.01%	1.60%	7.40%
	Mode 4	48.7 Hz	0.00%	3.45%	5.76%

Mode 1

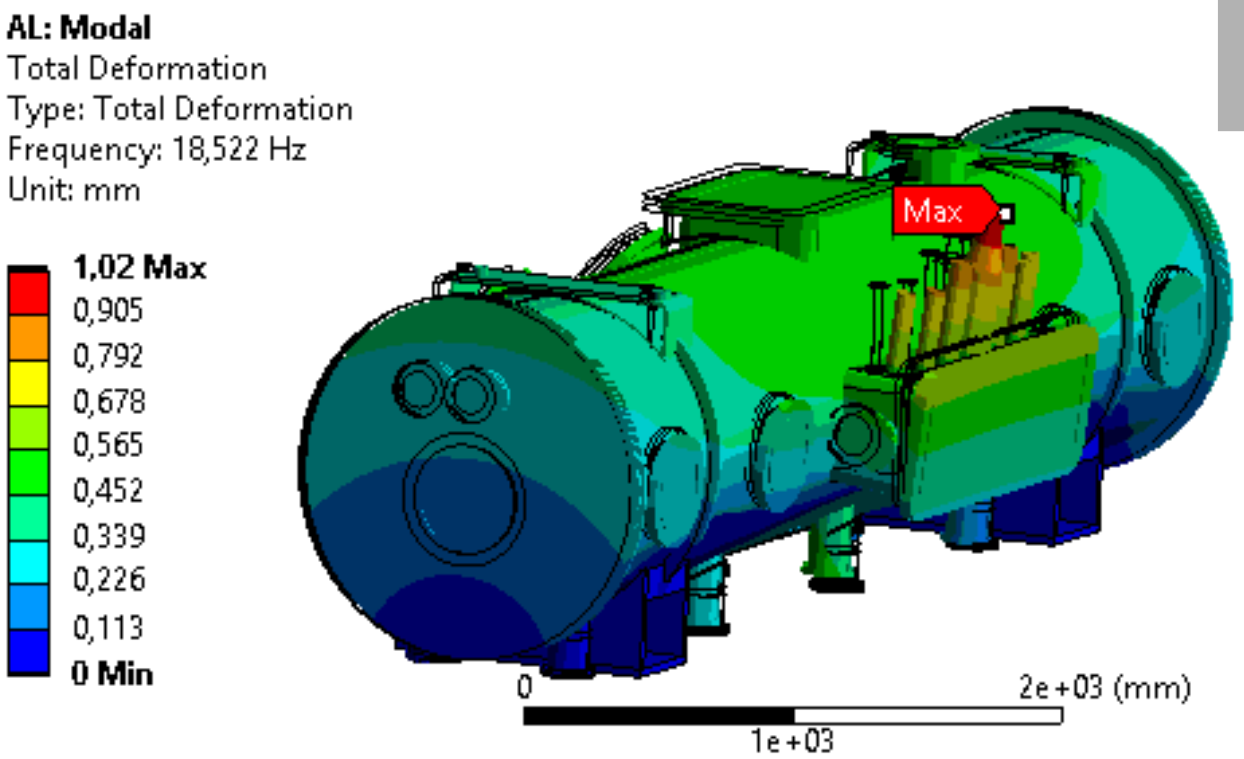

The first mode is under 20 Hz but the effective mass participating to this mode is low.
The second mode and last mode under 30Hz have a high effective mass.

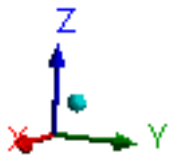

Vacuum vessel results – Modal simulations

		Frequency	Effective mass		
			X	Y	Z
S2	Mode 1	18.5 Hz	0.00%	0.83%	0.09%
	Mode 2	20.4 Hz	0.00%	66.7%	0.47%
	Mode 3	34.4 Hz	0.01%	1.60%	7.40%
	Mode 4	48.7 Hz	0.00%	3.45%	5.76%

Mode 2

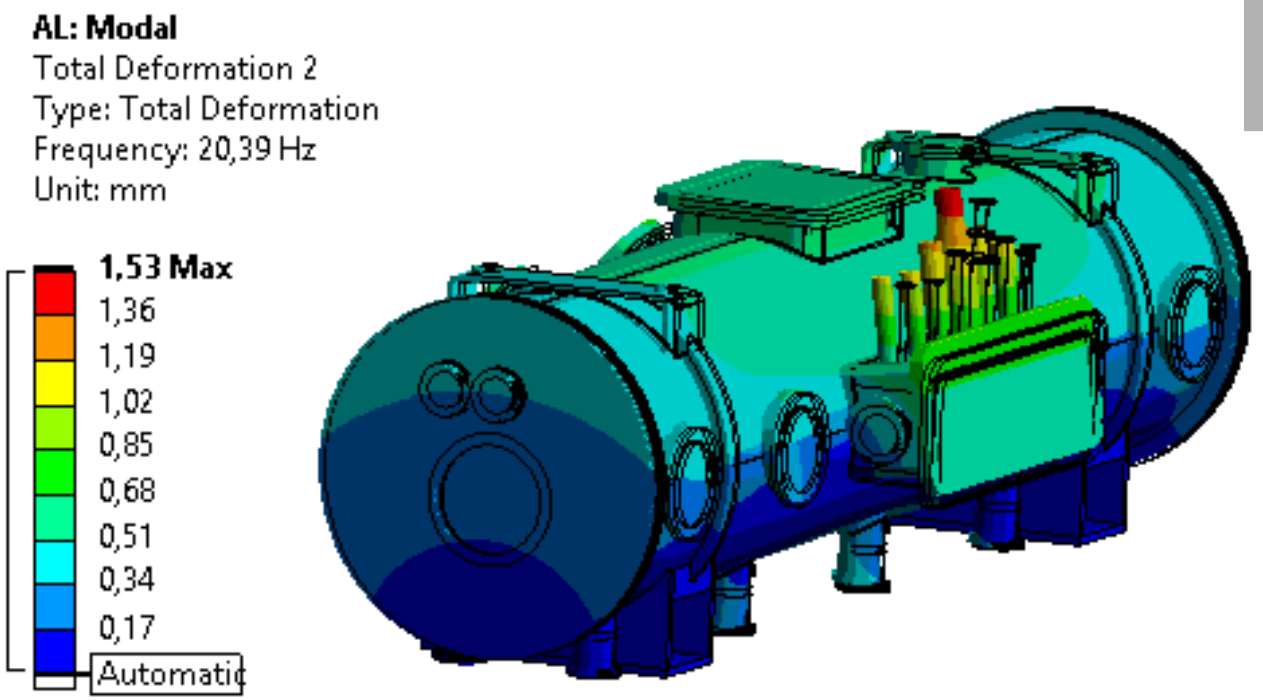

The first mode is under 20 Hz but the effective mass participating to this mode is low.
The second mode and last mode under 30Hz have a high effective mass.

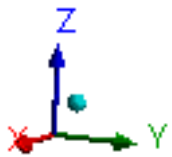

Vacuum vessel results – Modal simulations

		Frequency	Effective mass		
			X	Y	Z
S2	Mode 1	18.5 Hz	0.00%	0.83%	0.09%
	Mode 2	20.4 Hz	0.00%	66.7%	0.47%
	Mode 3	34.4 Hz	0.01%	1.60%	7.40%
	Mode 4	48.7 Hz	0.00%	3.45%	5.76%

Mode 3

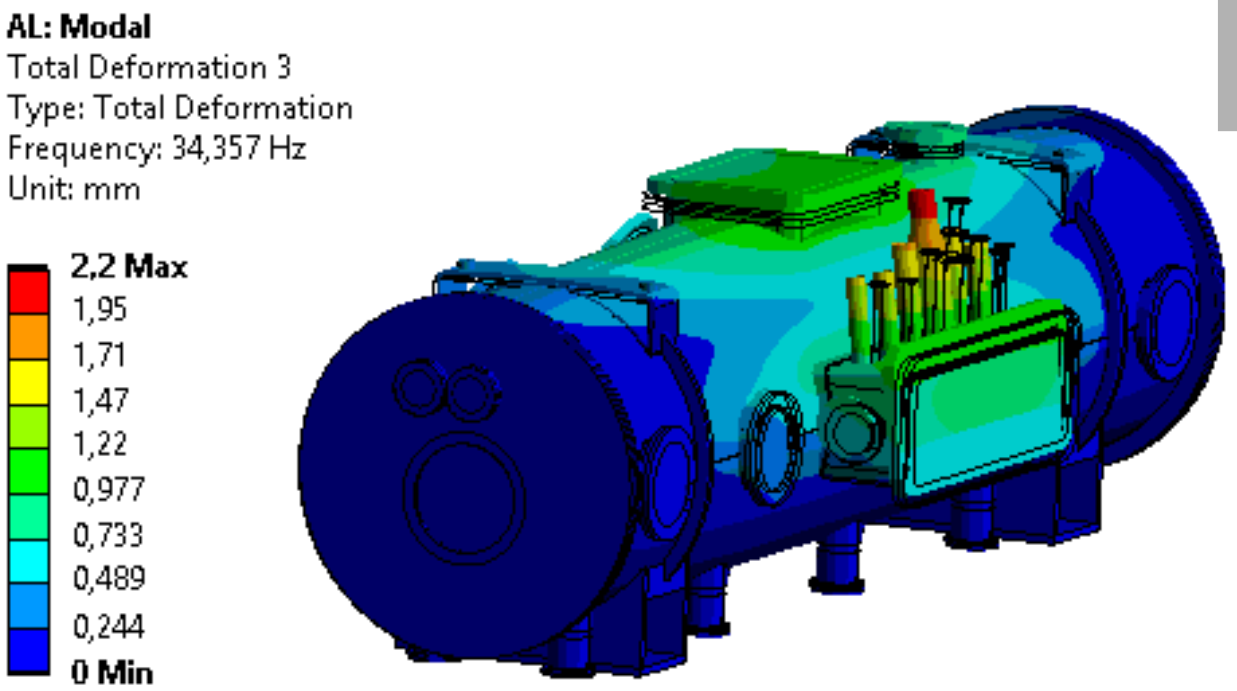

The first mode is under 20 Hz but the effective mass participating to this mode is low.
The second mode and last mode under 30Hz have a high effective mass.

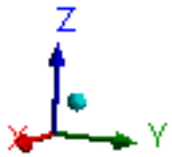

Vacuum vessel results – Modal simulations

		Frequency	Effective mass		
			X	Y	Z
S2	Mode 1	18.5 Hz	0.00%	0.83%	0.09%
	Mode 2	20.4 Hz	0.00%	66.7%	0.47%
	Mode 3	34.4 Hz	0.01%	1.60%	7.40%
	Mode 4	48.7 Hz	0.00%	3.45%	5.76%

Mode 4

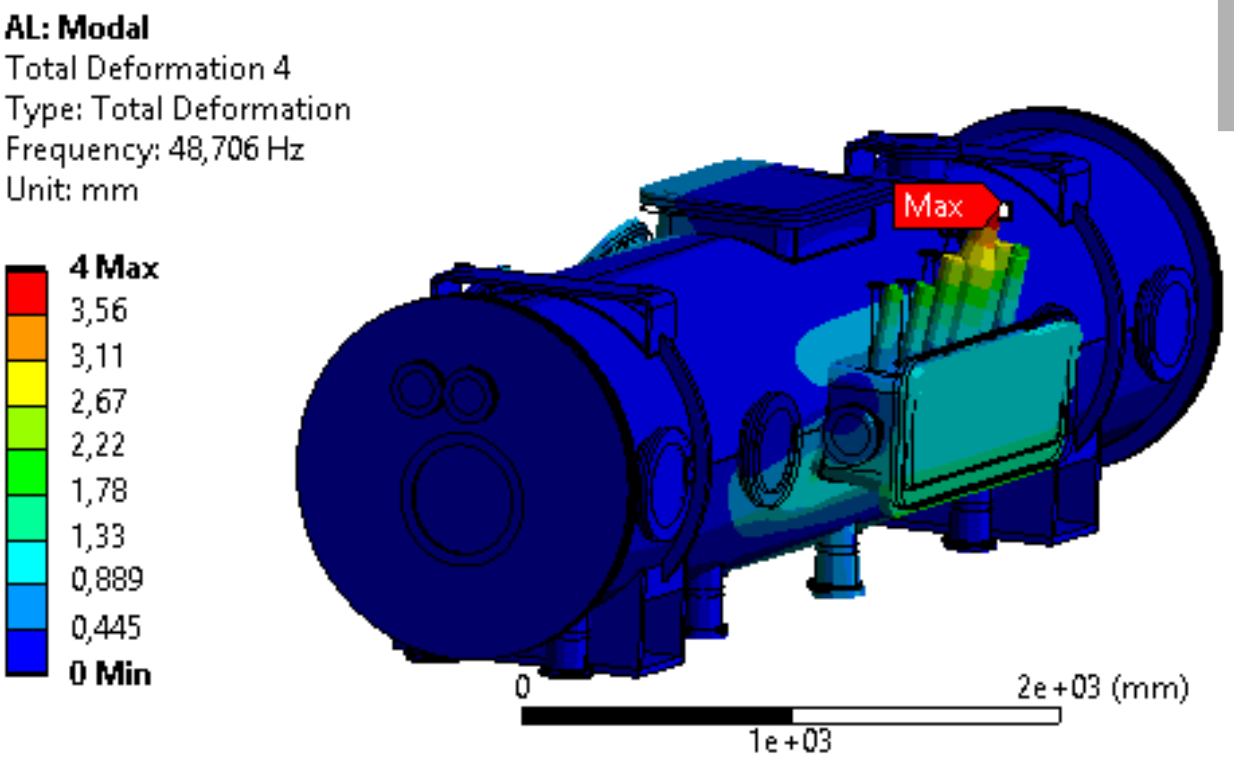

The first mode is under 20 Hz but the effective mass participating to this mode is low.
The second mode and last mode under 30Hz have a high effective mass.

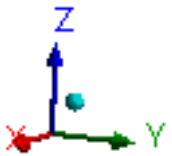

Overview of the cryomodule

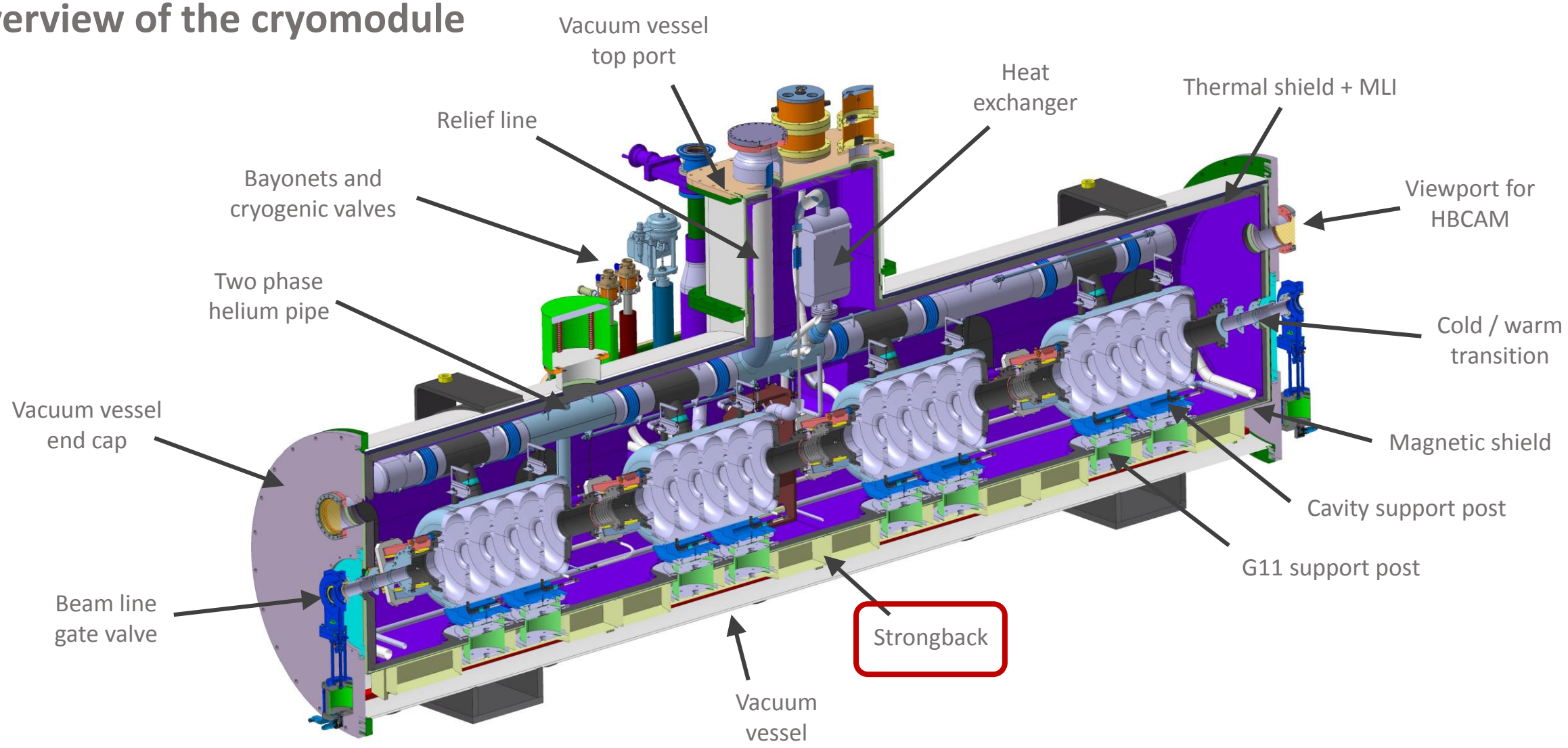

Strongback Results – Quasi static simulations

S1.x | Displacement

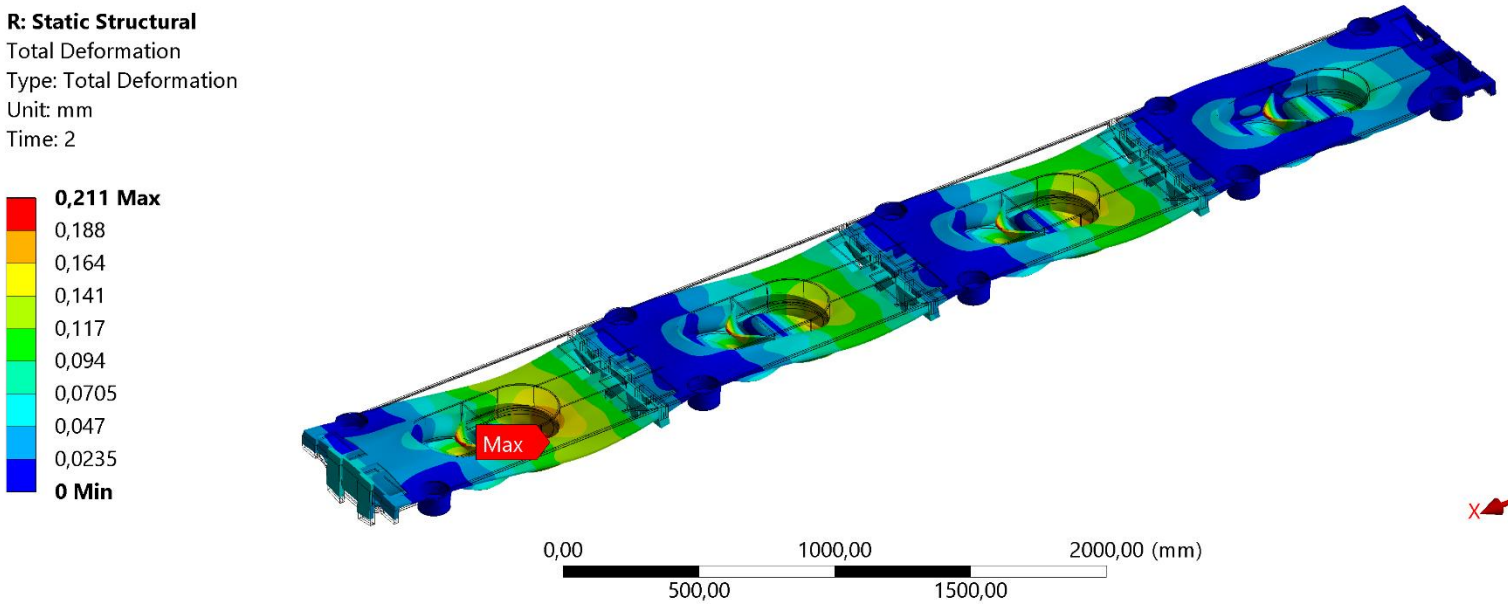

Type of simulations		Maximum	
		Stress	Displacements
S1	S1.x	311 MPa	0.21 mm
	S1.y	97 MPa	0.20 mm
	S1.z	53 MPa	0.16 mm

Strongback Results – Quasi static simulations

S1.x | Stress

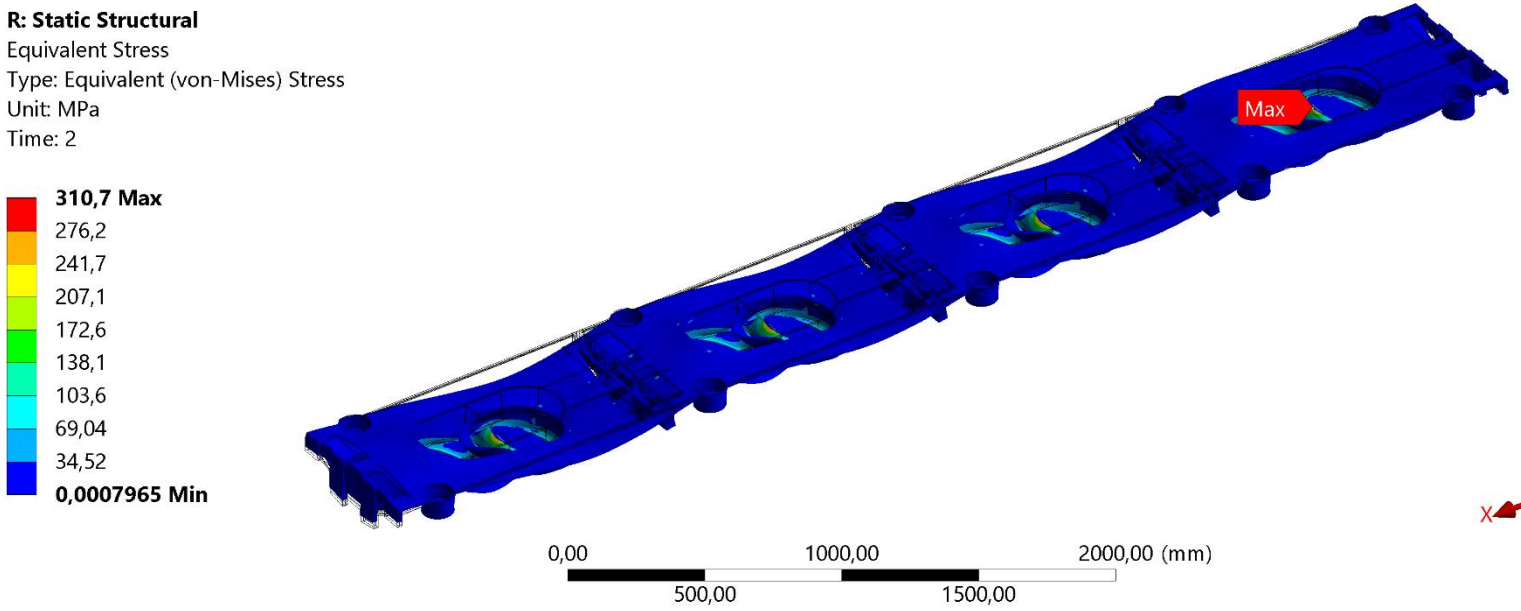

Type of simulations		Maximum	
		Stress	Displacements
S1	S1.x	311 MPa	0.21 mm
	S1.y	97 MPa	0.20 mm
	S1.z	53 MPa	0.16 mm

Strongback Results – Quasi static simulations

S1.y | Displacement

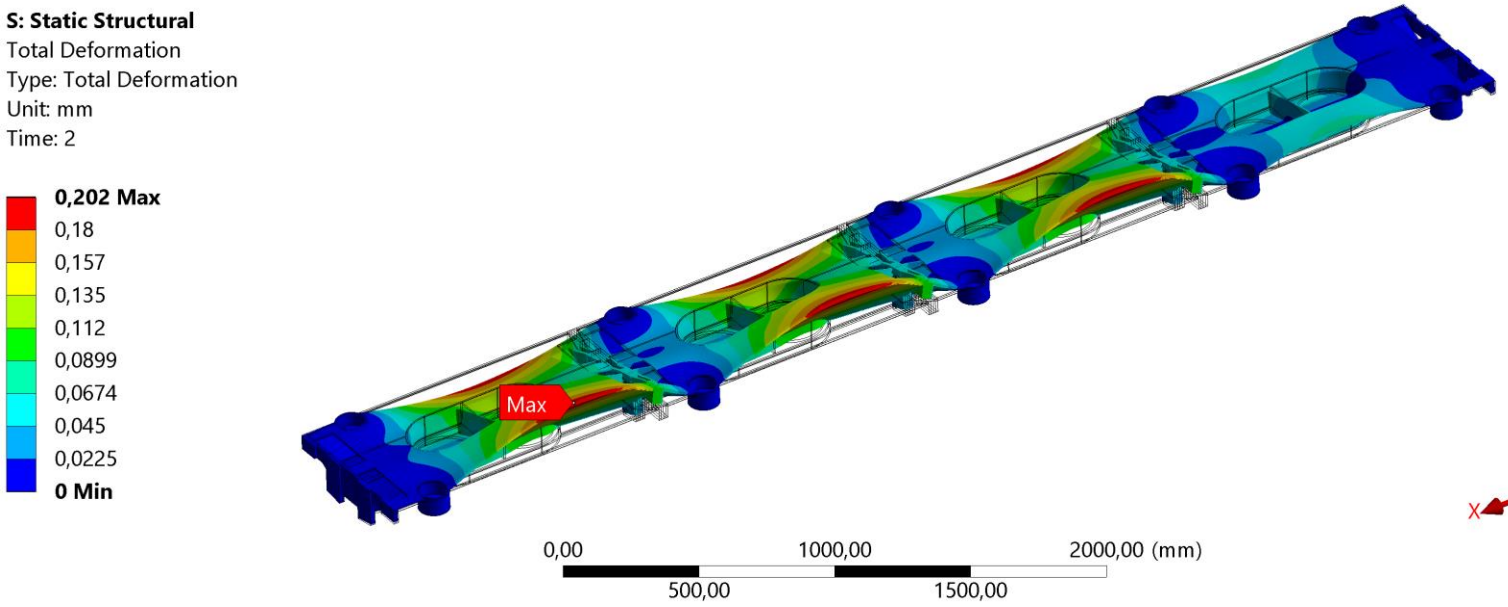

Type of simulations		Maximum	
		Stress	Displacements
S1	S1.x	311 MPa	0.21 mm
	S1.y	97 MPa	0.20 mm
	S1.z	53 MPa	0.16 mm

Strongback Results – Quasi static simulations

S1.y | Stress

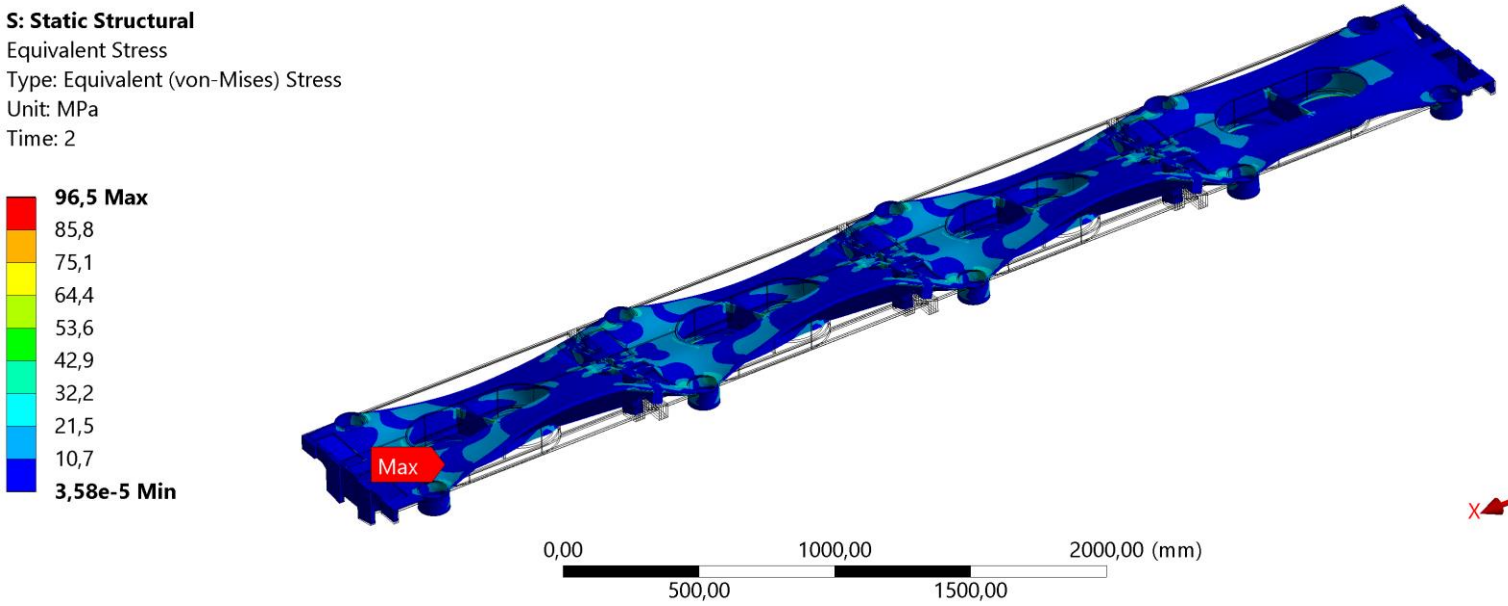

Type of simulations		Maximum	
		Stress	Displacements
S1	S1.x	311 MPa	0.21 mm
	S1.y	97 MPa	0.20 mm
	S1.z	53 MPa	0.16 mm

Strongback Results – Quasi static simulations

S1.z | Displacement

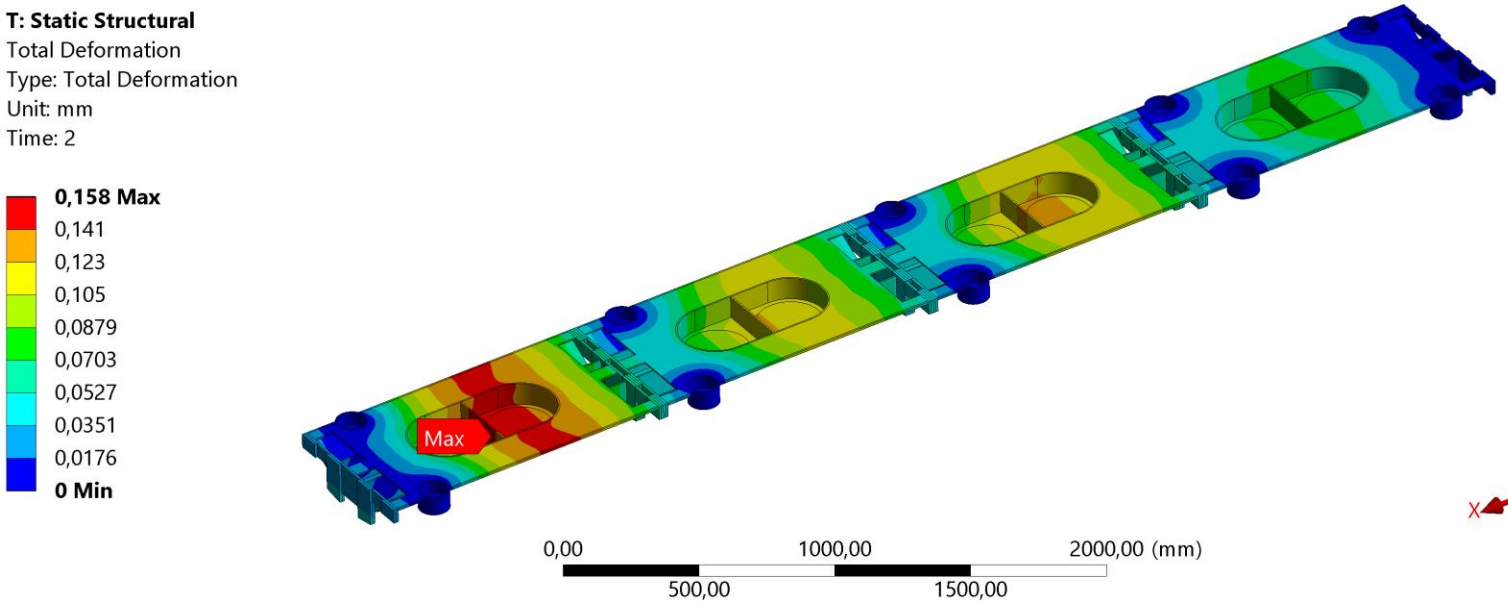

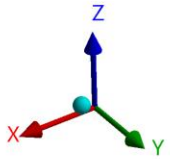

Type of simulations		Maximum	
		Stress	Displacements
S1	S1.x	311 MPa	0.21 mm
	S1.y	97 MPa	0.20 mm
	S1.z	53 MPa	0.16 mm

Strongback Results – Quasi static simulations

S1.z | Stress

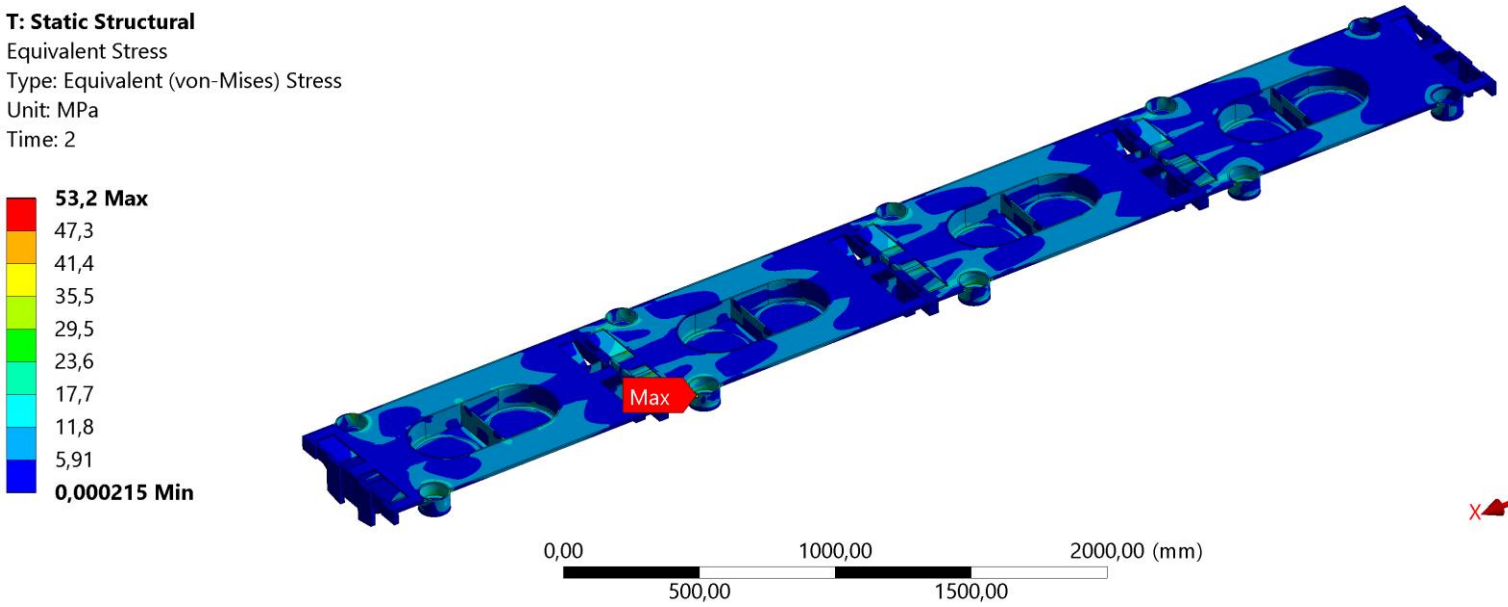

Type of simulations		Maximum	
		Stress	Displacements
S1	S1.x	311 MPa	0.21 mm
	S1.y	97 MPa	0.20 mm
	S1.z	53 MPa	0.16 mm

Overview of the cryomodule

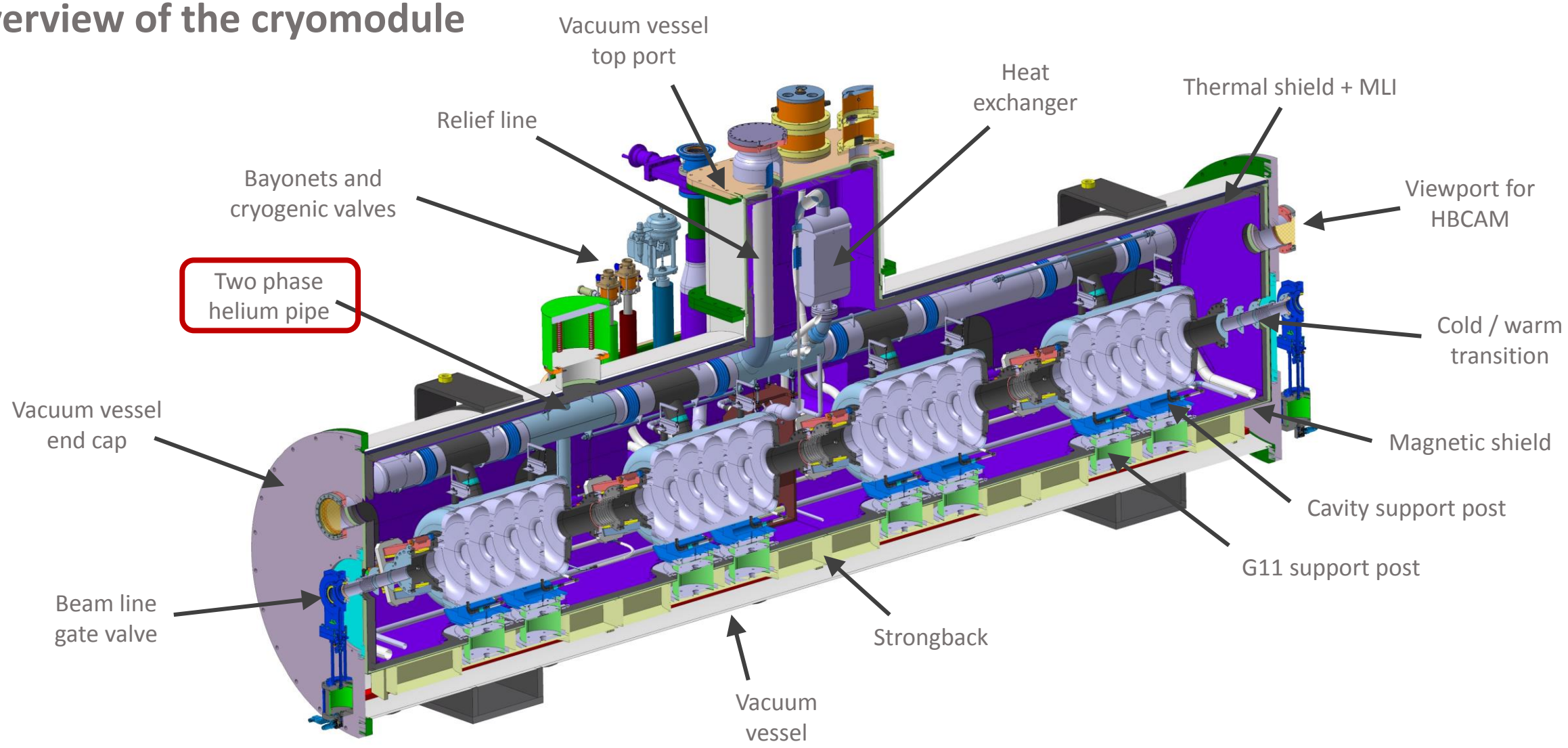

Two-phase pipes Results – Quasi static simulations

S1.x | Stress

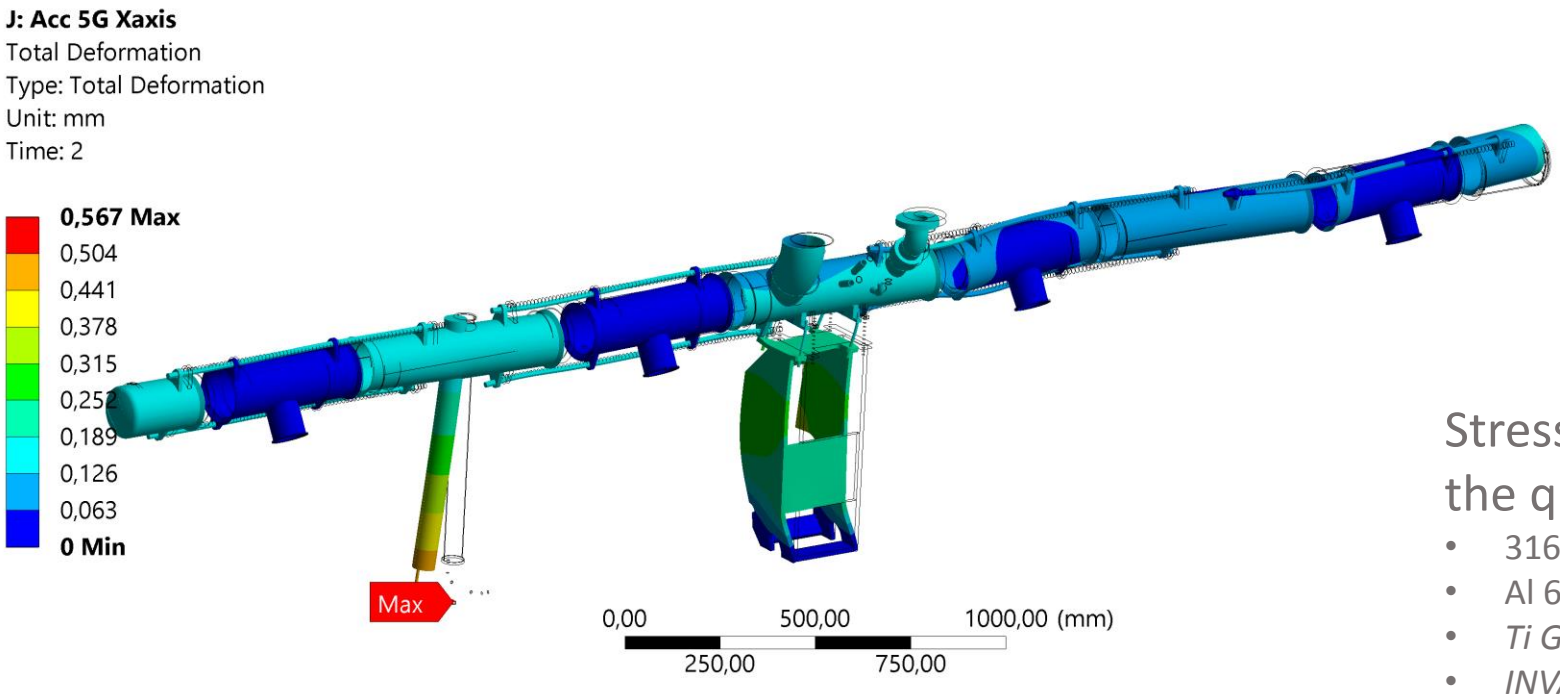

Type of simulations		Maximum	
		Stress	Displacements
S1	S1.x	50MPa	0.6mm
	S1.y	28MPa	0.2mm
	S1.z	38MPa	0.3mm

Stress and displacements are acceptable for the quasi-static acceleration simulations.

- 316L *stress limit at 200MPa*0.8 =* *160MPa*
- Al 6061-T6 *stress limit at 240MPa*0.8 =* *192MPa*
- *Ti Grd2 stress limit at 275MPa*0.8 =* *220MPa*
- *INVAR stress limit at 276MPa*0.8=* *220MPa*

Two-phase pipes Results – Quasi static simulations

S1.x | Stress

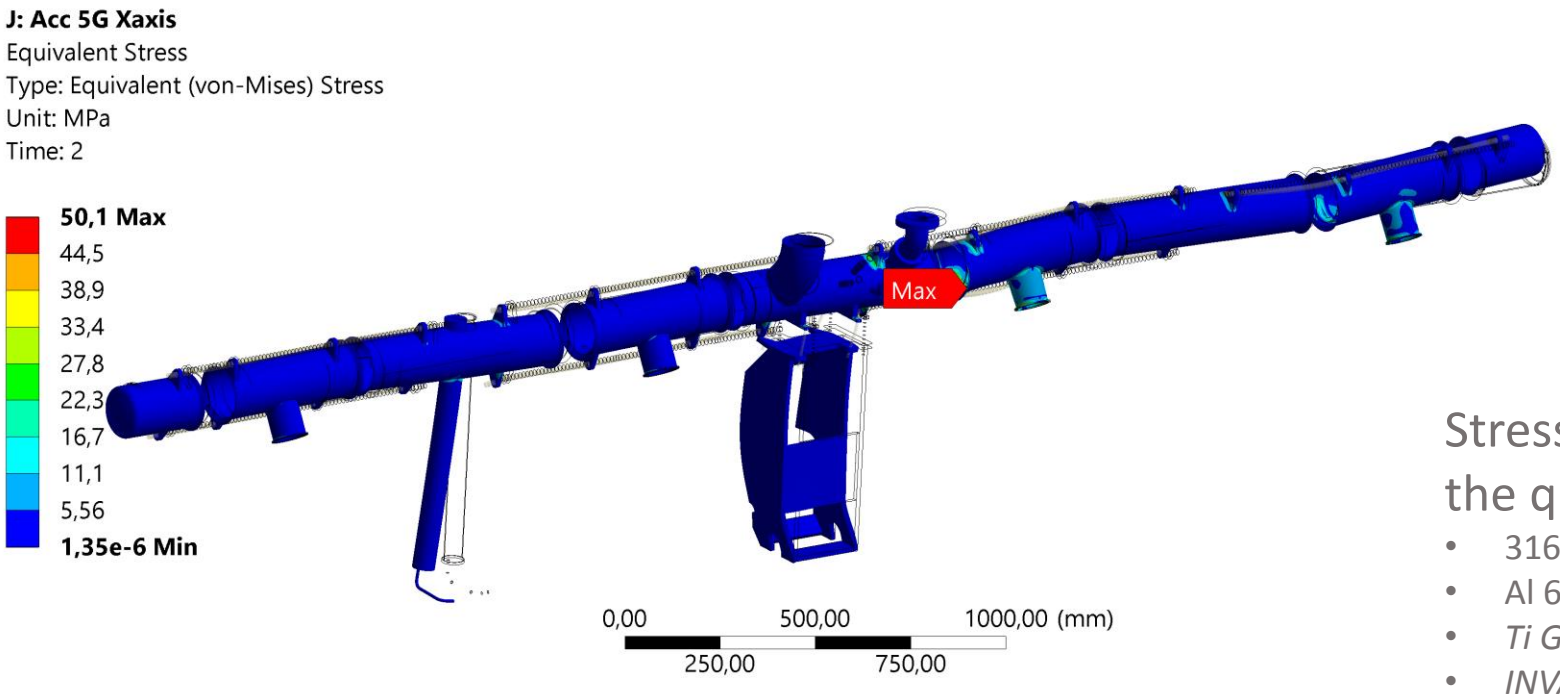

Type of simulations		Maximum	
		Stress	Displacements
S1	S1.x	50MPa	0.6mm
	S1.y	28MPa	0.2mm
	S1.z	38MPa	0.3mm

Stress and displacements are acceptable for the quasi-static acceleration simulations.

- 316L *stress limit at 200MPa*0.8 =* *160MPa*
- Al 6061-T6 *stress limit at 240MPa*0.8 =* *192MPa*
- *Ti Grd2 stress limit at 275MPa*0.8 =* *220MPa*
- *INVAR stress limit at 276MPa*0.8=* *220MPa*

Two-phase pipes Results – Quasi static simulations

S1.x | Stress

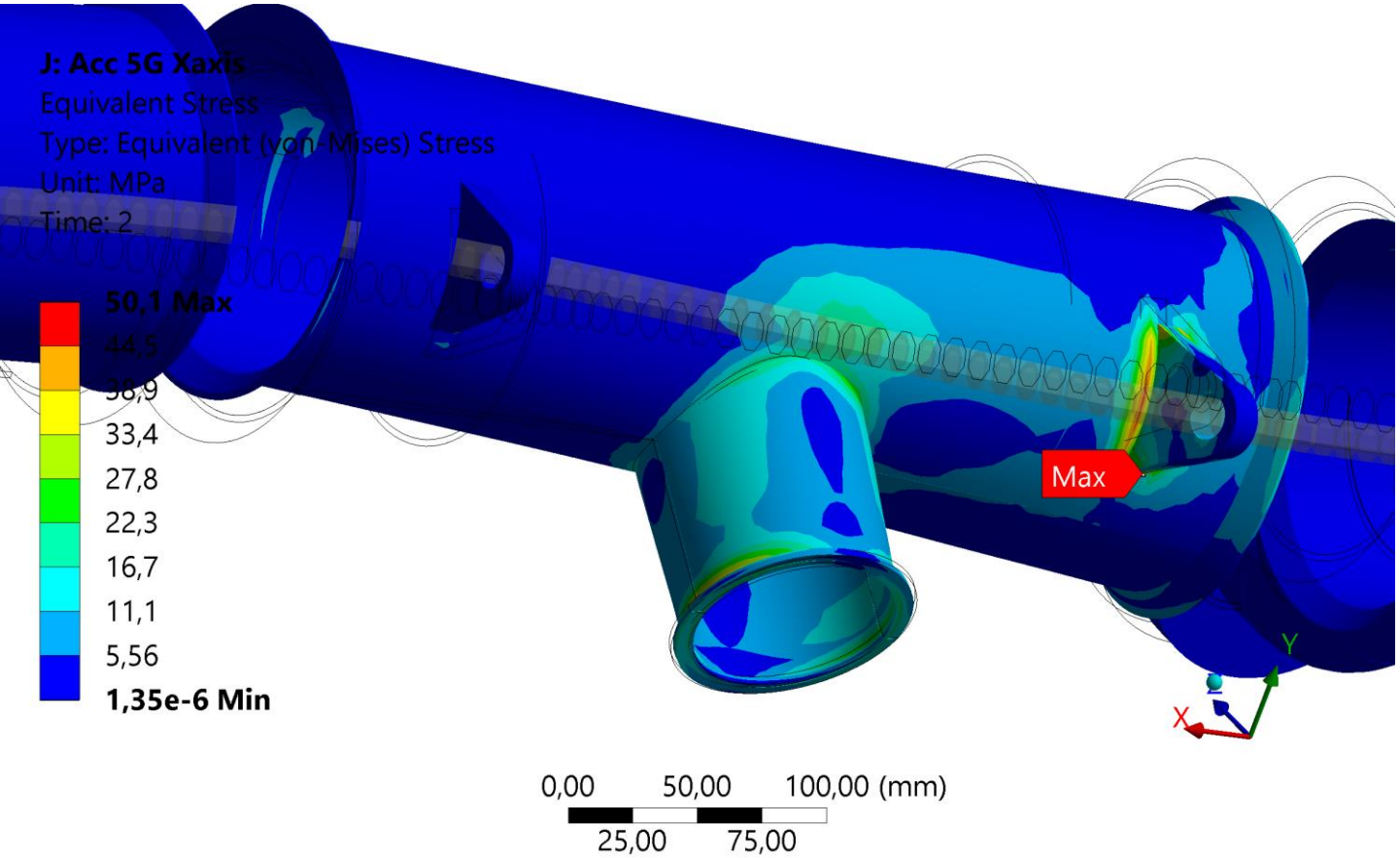

Type of simulations		Maximum	
		Stress	Displacements
S1	S1.x	50MPa	0.6mm
	S1.y	28MPa	0.2mm
	S1.z	38MPa	0.3mm

Stress and displacements are acceptable for the quasi-static acceleration simulations.

- 316L *stress limit at 200MPa*0.8 =* *160MPa*
- Al 6061-T6 *stress limit at 240MPa*0.8 =* *192MPa*
- *Ti Grd2 stress limit at 275MPa*0.8 =* *220MPa*
- *INVAR stress limit at 276MPa*0.8=* *220MPa*

Two-phase pipes Results – Quasi static simulations

S1.y | Deformations

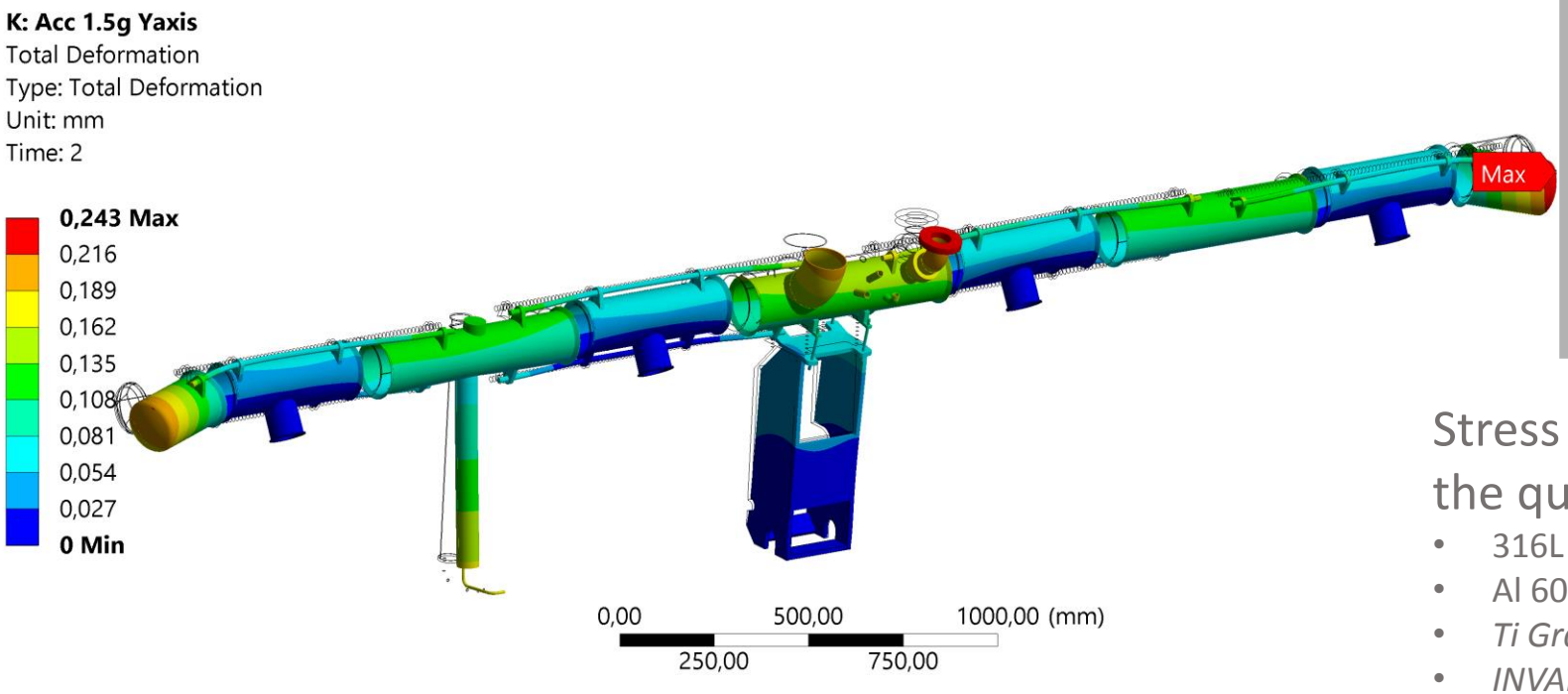

Type of simulations		Maximum	
		Stress	Displacements
S1	S1.x	50MPa	0.6mm
	S1.y	28MPa	0.2mm
	S1.z	38MPa	0.3mm

Stress and displacements are acceptable for the quasi-static acceleration simulations.

- 316L *stress limit at 200MPa*0.8 =* *160MPa*
- Al 6061-T6 *stress limit at 240MPa*0.8 =* *192MPa*
- *Ti Grd2 stress limit at 275MPa*0.8 =* *220MPa*
- *INVAR stress limit at 276MPa*0.8=* *220MPa*

Two-phase pipes Results – Quasi static simulations

S1.y | Stress

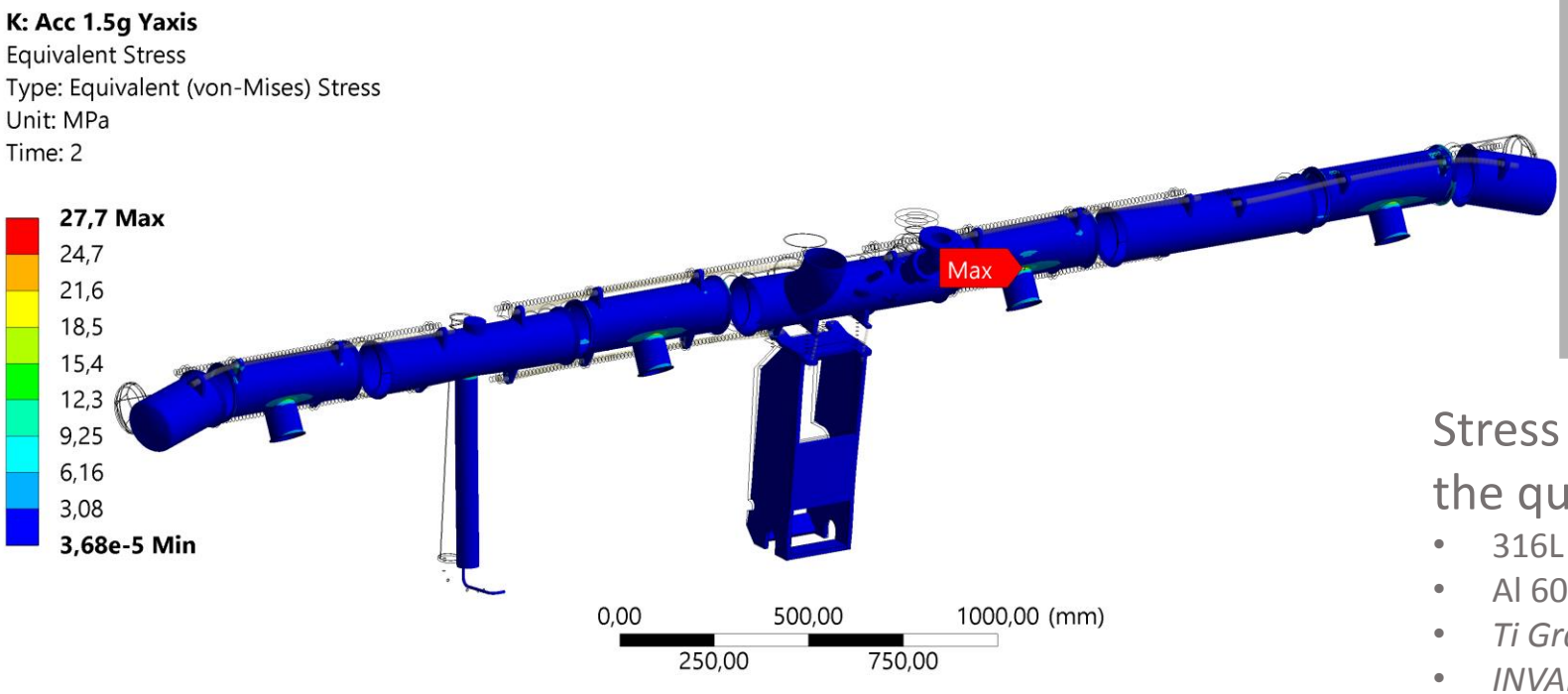

Type of simulations		Maximum	
		Stress	Displacements
S1	S1.x	50MPa	0.6mm
	S1.y	28MPa	0.2mm
	S1.z	38MPa	0.3mm

Stress and displacements are acceptable for the quasi-static acceleration simulations.

- 316L *stress limit at 200MPa*0.8 =* *160MPa*
- Al 6061-T6 *stress limit at 240MPa*0.8 =* *192MPa*
- *Ti Grd2 stress limit at 275MPa*0.8 =* *220MPa*
- *INVAR stress limit at 276MPa*0.8=* *220MPa*

Two-phase pipes Results – Quasi static simulations

S1.y | Stress

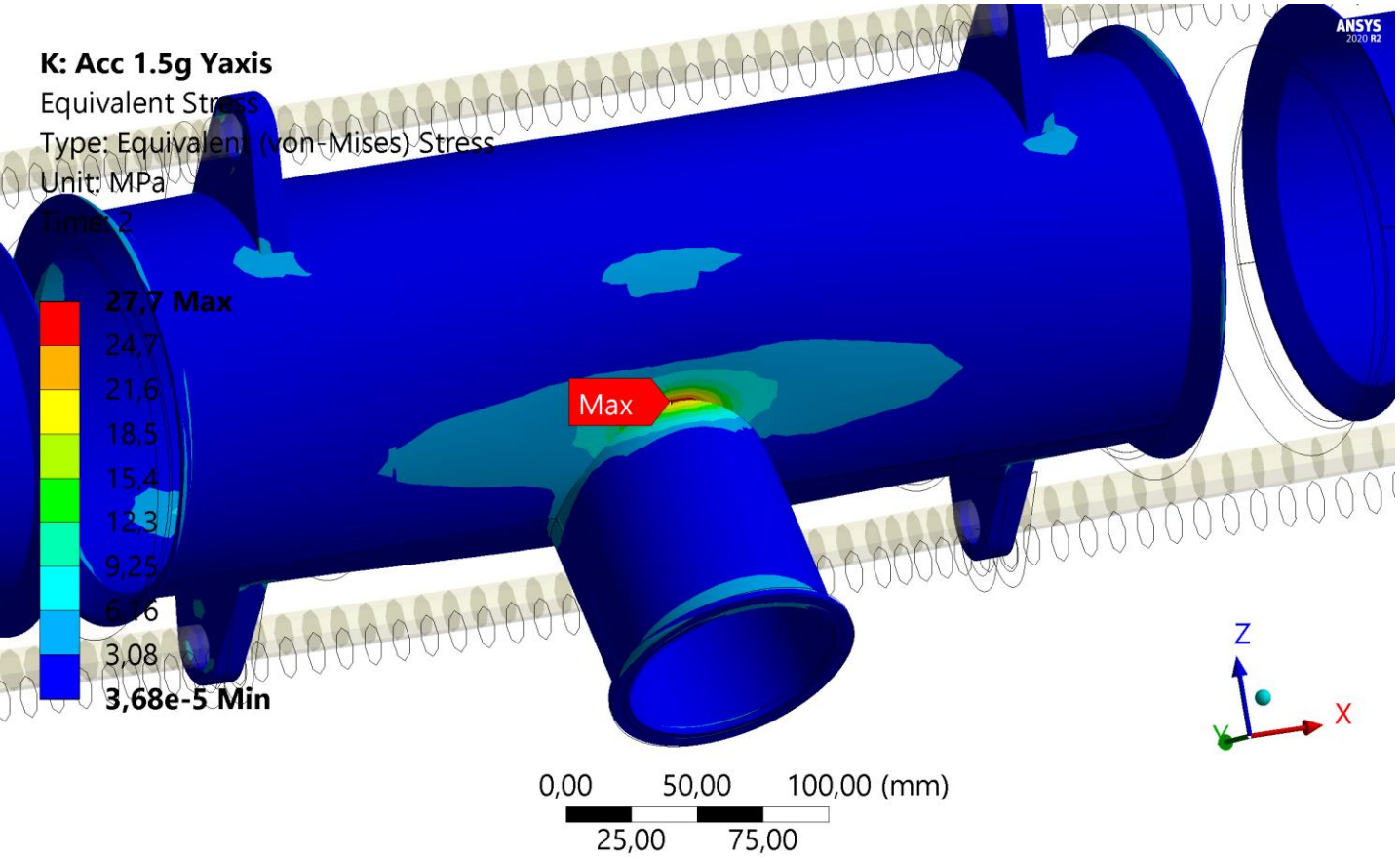

Type of simulations		Maximum	
		Stress	Displacements
S1	S1.x	50MPa	0.6mm
	S1.y	28MPa	0.2mm
	S1.z	38MPa	0.3mm

Stress and displacements are acceptable for the quasi-static acceleration simulations.

- 316L *stress limit at 200MPa*0.8 =* *160MPa*
- Al 6061-T6 *stress limit at 240MPa*0.8 =* *192MPa*
- *Ti Grd2 stress limit at 275MPa*0.8 =* *220MPa*
- *INVAR stress limit at 276MPa*0.8=* *220MPa*

Two-phase pipes Results – Quasi static simulations

S1.z | Deformations

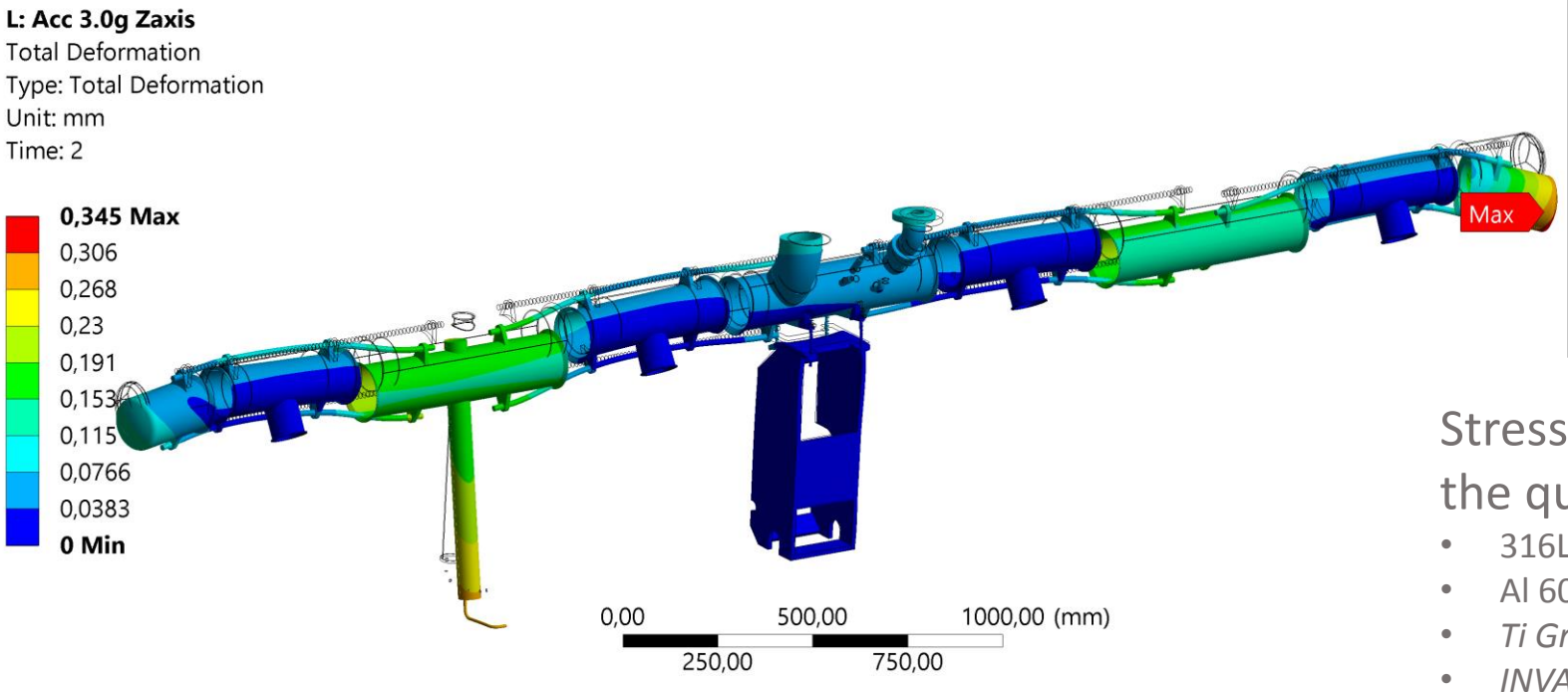

Type of simulations		Maximum	
		Stress	Displacements
S1	S1.x	50MPa	0.6mm
	S1.y	28MPa	0.2mm
	S1.z	38MPa	0.3mm

Stress and displacements are acceptable for the quasi-static acceleration simulations.

- 316L *stress limit at 200MPa*0.8 =* *160MPa*
- Al 6061-T6 *stress limit at 240MPa*0.8 =* *192MPa*
- *Ti Grd2 stress limit at 275MPa*0.8 =* *220MPa*
- *INVAR stress limit at 276MPa*0.8=* *220MPa*

Two-phase pipes Results – Quasi static simulations

S1.z | Stress

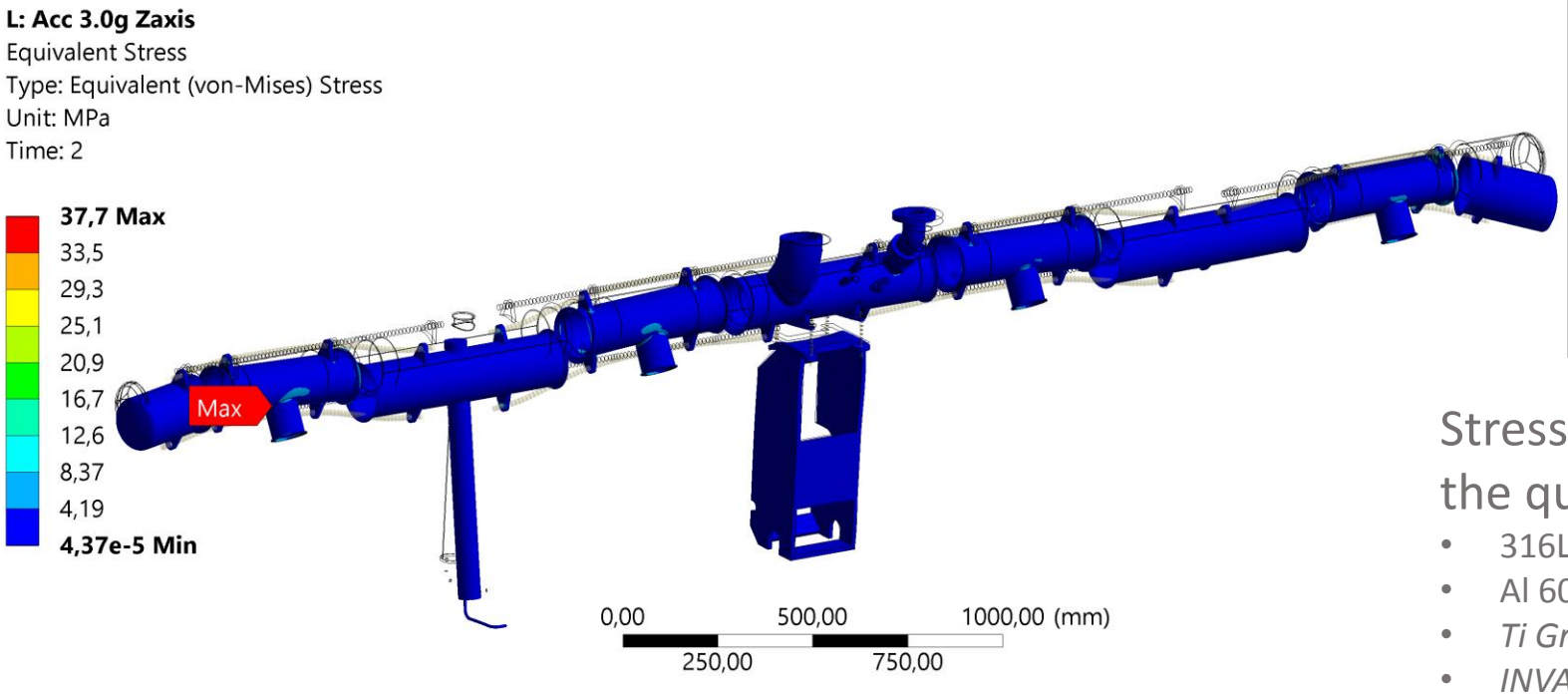

Type of simulations		Maximum	
		Stress	Displacements
S1	S1.x	50MPa	0.6mm
	S1.y	28MPa	0.2mm
	S1.z	38MPa	0.3mm

Stress and displacements are acceptable for the quasi-static acceleration simulations.

- 316L *stress limit at 200MPa*0.8 =* *160MPa*
- Al 6061-T6 *stress limit at 240MPa*0.8 =* *192MPa*
- *Ti Grd2 stress limit at 275MPa*0.8 =* *220MPa*
- *INVAR stress limit at 276MPa*0.8=* *220MPa*

Two-phase pipes Results – Quasi static simulations

S1.z | Stress

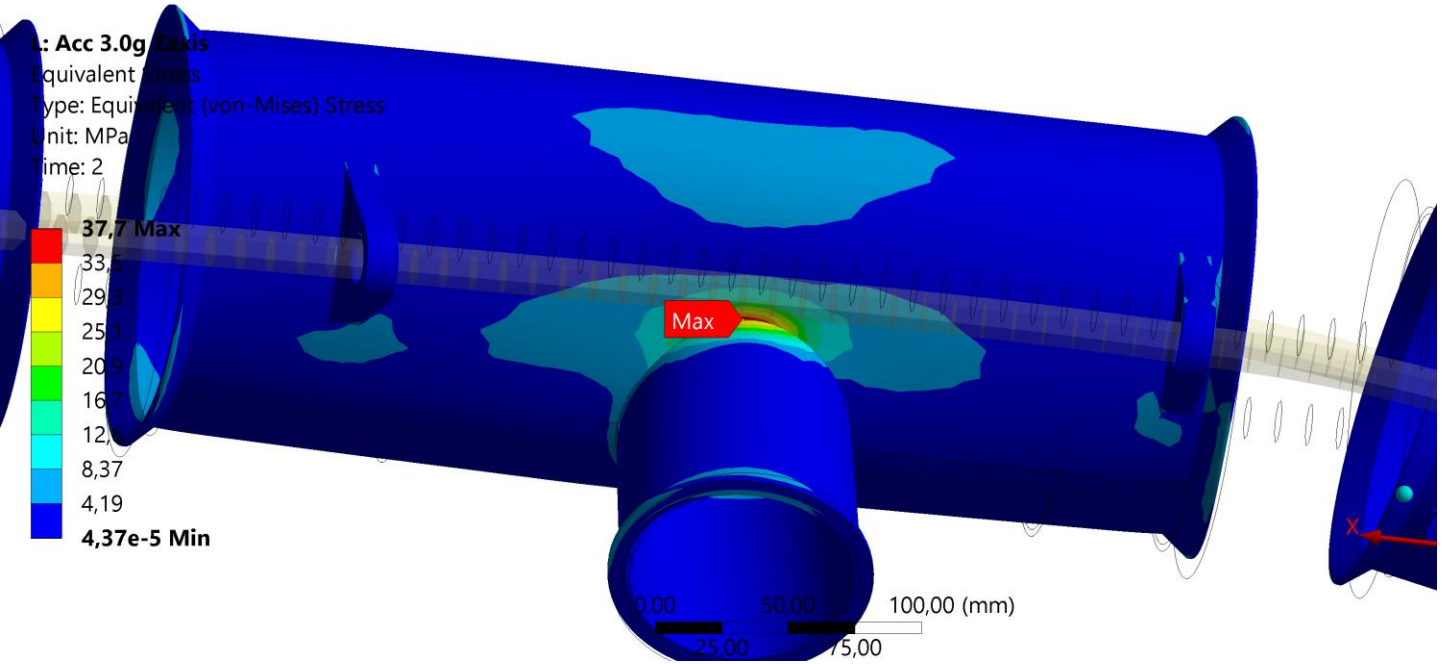

Type of simulations		Maximum	
		Stress	Displacements
S1	S1.x	50MPa	0.6mm
	S1.y	28MPa	0.2mm
	S1.z	38MPa	0.3mm

Stress and displacements are acceptable for the quasi-static acceleration simulations.

- 316L *stress limit at 200MPa*0.8 =* *160MPa*
- Al 6061-T6 *stress limit at 240MPa*0.8 =* *192MPa*
- *Ti Grd2 stress limit at 275MPa*0.8 =* *220MPa*
- *INVAR stress limit at 276MPa*0.8=* *220MPa*

Two-phase pipes Results – Modal simulations

		Frequency	Effective mass		
			X	Y	Z
S2	Mode 1	38,7 Hz	0.00%	0.00%	0.46%
	Mode 2	41,2 Hz	0.05%	1.78%	0.78%
	Mode 3	46,4 Hz	0.02%	2.59%	0.06%
	Mode 4	51,2 Hz	0.00%	40.3%	4.33%

Mode 1

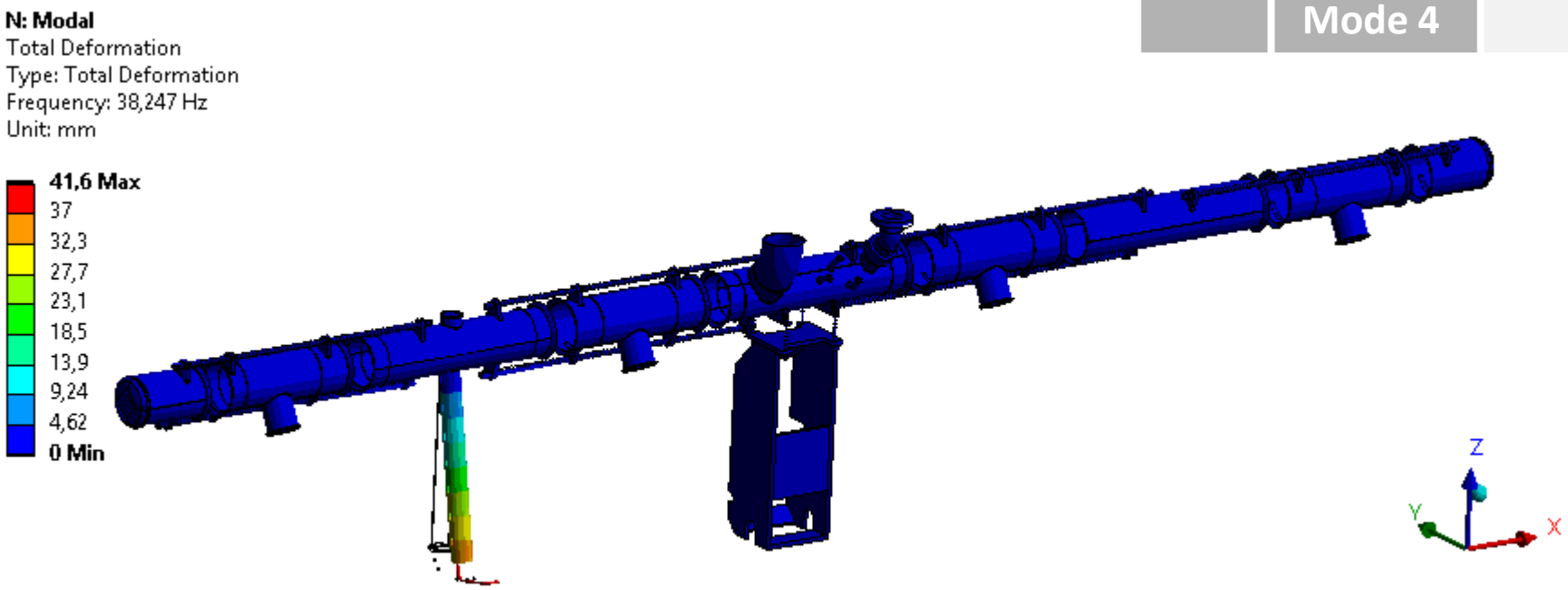

Two-phase pipes Results – Modal simulations

		Frequency	Effective mass		
			X	Y	Z
S2	Mode 1	38,7 Hz	0.00%	0.00%	0.46%
	Mode 2	41,2 Hz	0.05%	1.78%	0.78%
	Mode 3	46,4 Hz	0.02%	2.59%	0.06%
	Mode 4	51,2 Hz	0.00%	40.3%	4.33%

Mode 2

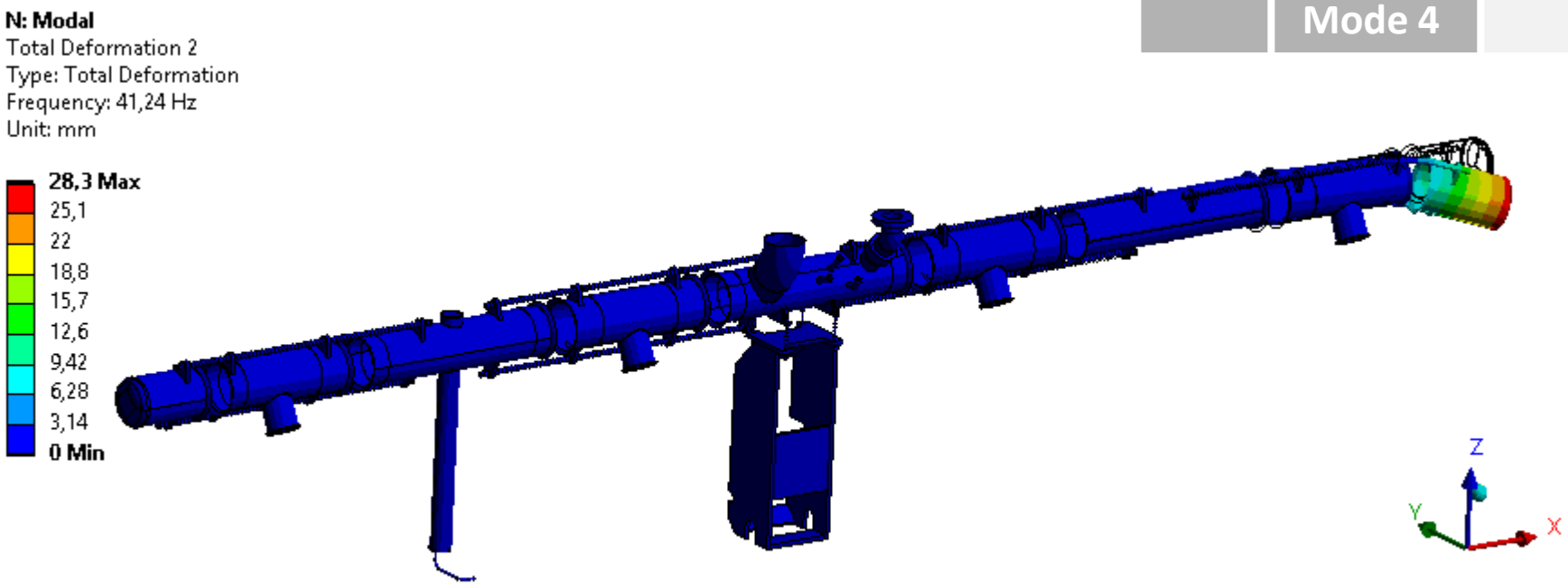

Two-phase pipes Results – Modal simulations

		Frequency	Effective mass		
			X	Y	Z
S2	Mode 1	38,7 Hz	0.00%	0.00%	0.46%
	Mode 2	41,2 Hz	0.05%	1.78%	0.78%
	Mode 3	46,4 Hz	0.02%	2.59%	0.06%
	Mode 4	51,2 Hz	0.00%	40.3%	4.33%

Mode 3

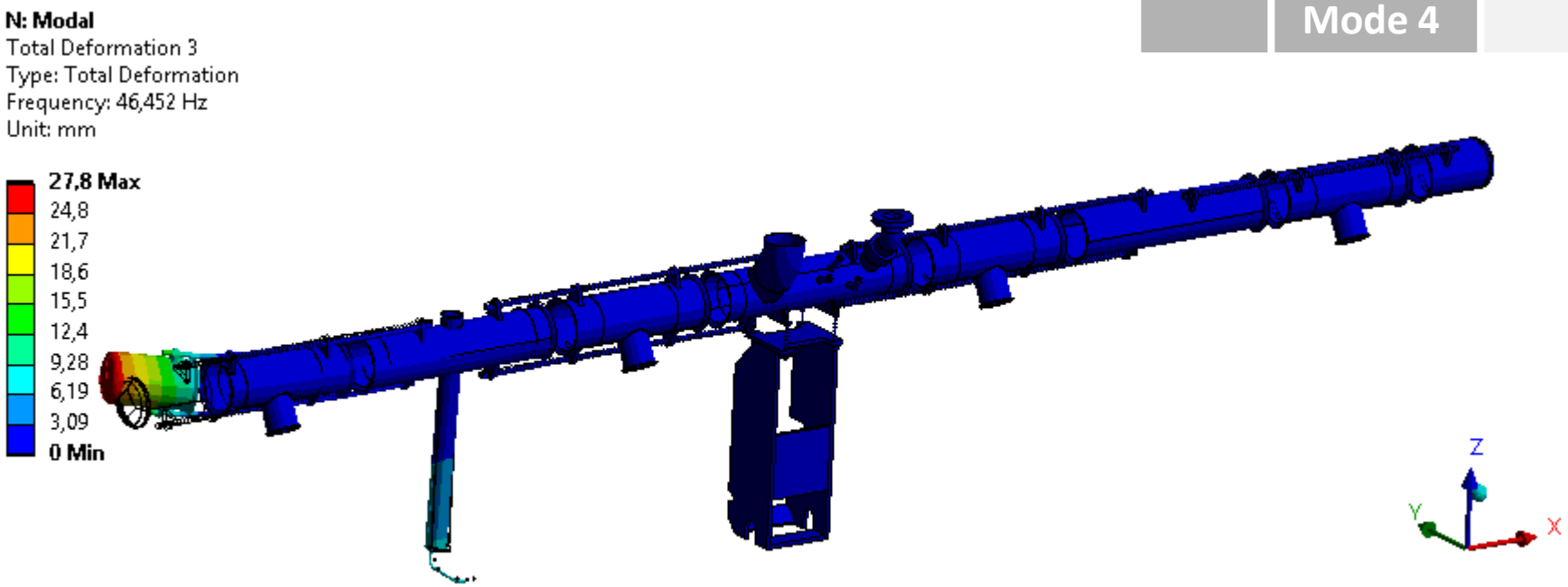

Two-phase pipes Results – Modal simulations

		Frequency	Effective mass		
			X	Y	Z
S2	Mode 1	38,7 Hz	0.00%	0.00%	0.46%
	Mode 2	41,2 Hz	0.05%	1.78%	0.78%
	Mode 3	46,4 Hz	0.02%	2.59%	0.06%
	Mode 4	51,2 Hz	0.00%	40.3%	4.33%

Mode 4

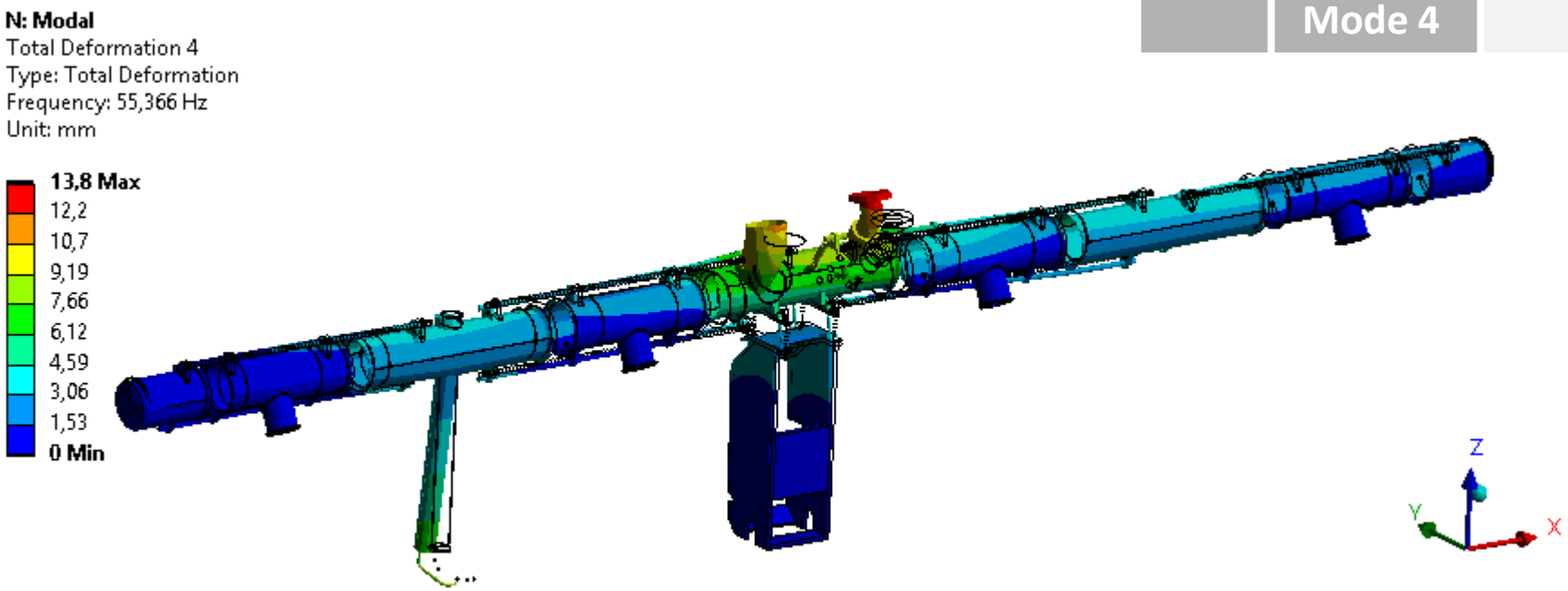

Overview of the cryomodule

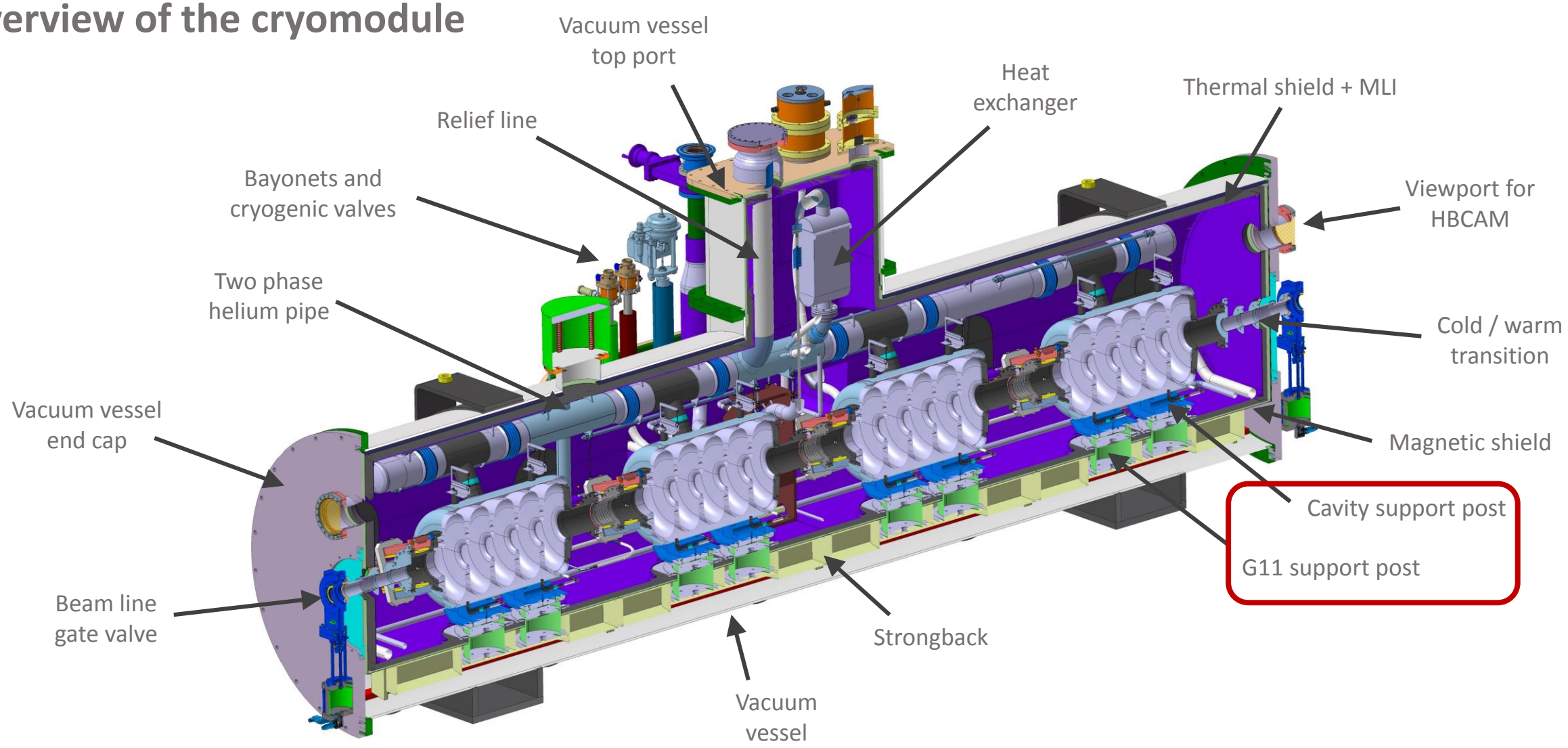

Cavity posts and G11 posts – Quasi static simulations

S1.x | Stress

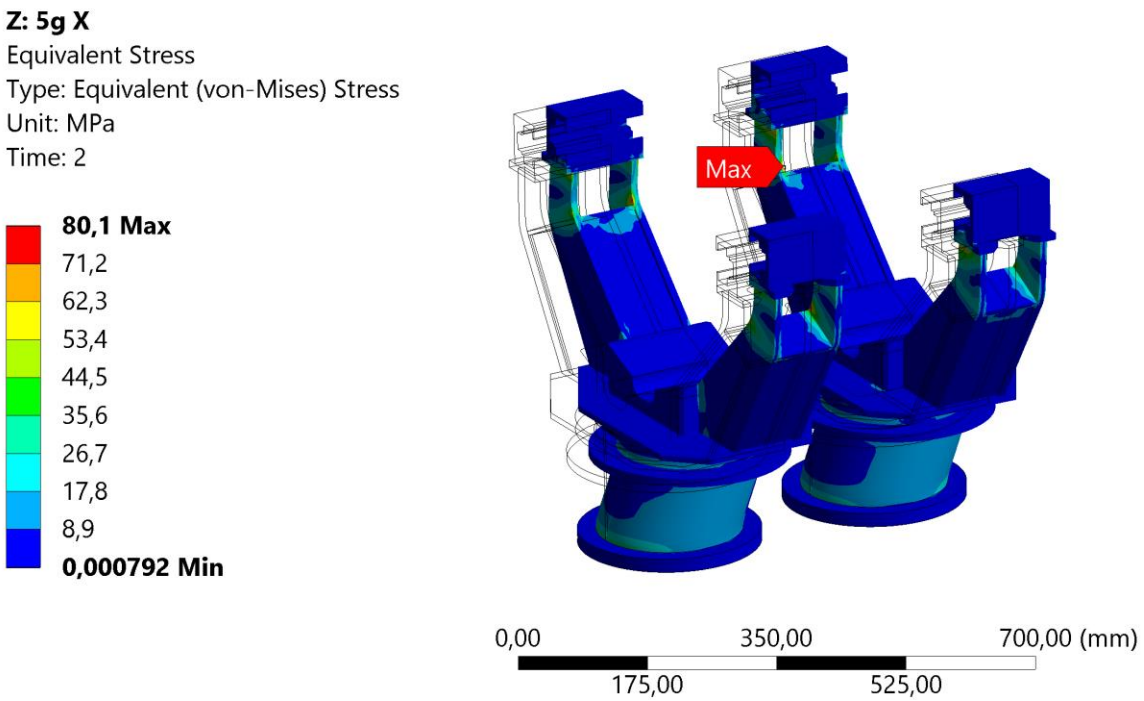

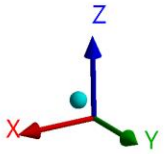

Type of simulations		Maximum	
		Stress	Displacements
S1	S1.x	80MPa	1.8mm
	S1.y	11MPa	0.6mm
	S1.z	8MPa	0.03mm

Cavity posts and G11 posts – Quasi static simulations

S1.y | Deformations

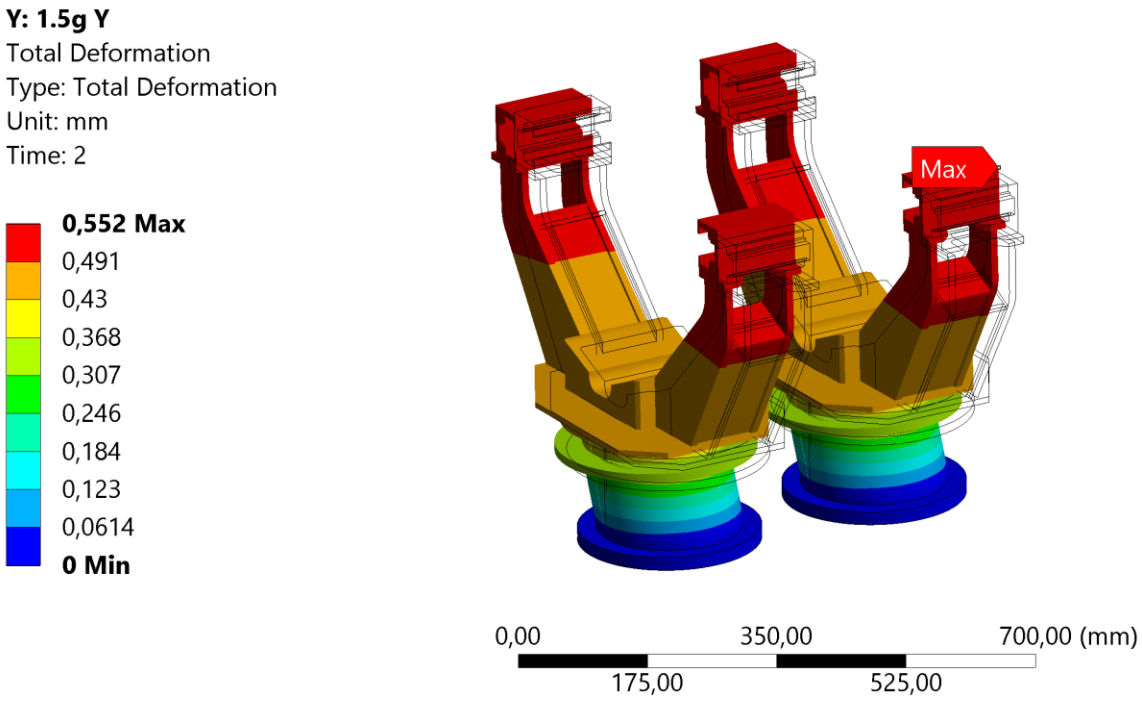

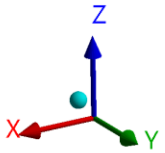

Type of simulations		Maximum	
		Stress	Displacements
S1	S1.x	80MPa	1.8mm
	S1.y	11MPa	0.6mm
	S1.z	8MPa	0.03mm

Cavity posts and G11 posts – Quasi static simulations

S1.y | Stress

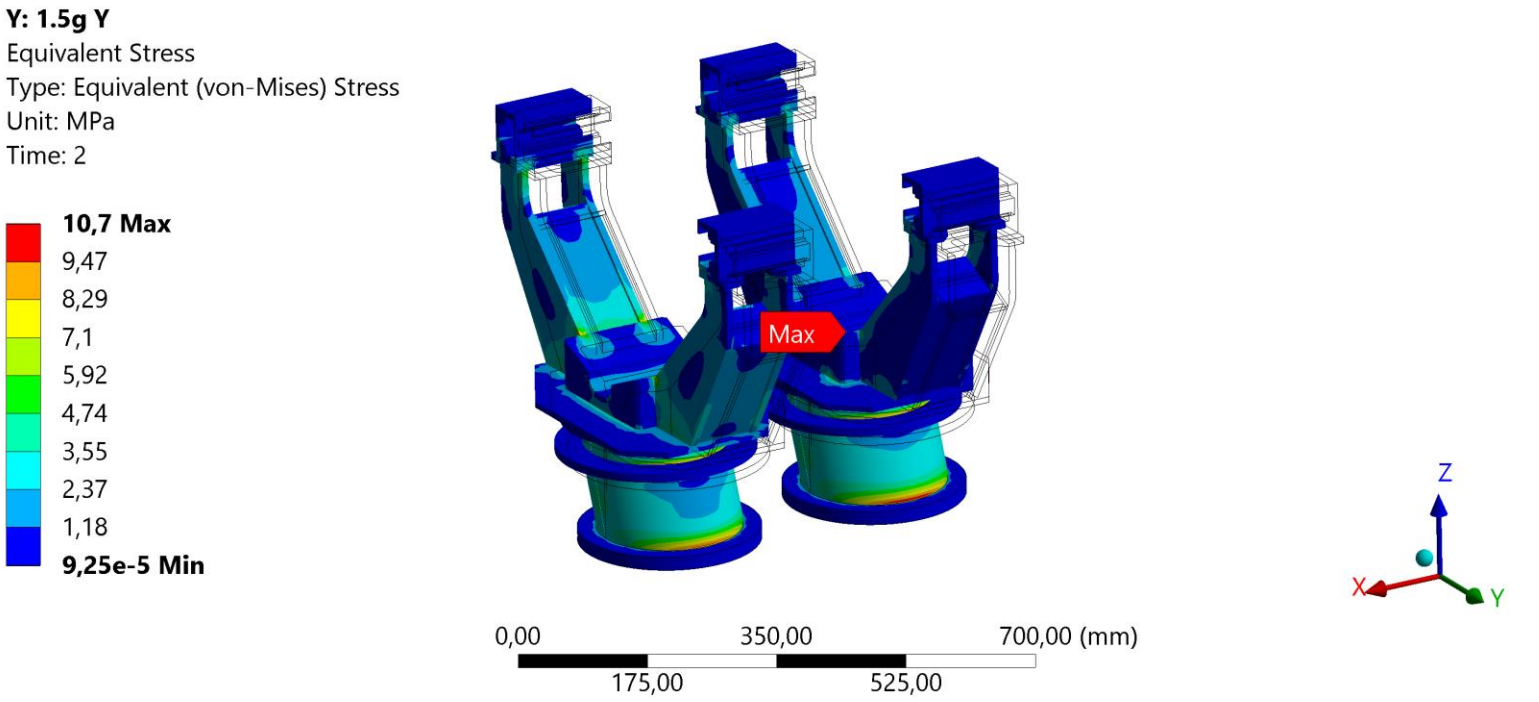

Type of simulations		Maximum	
		Stress	Displacements
S1	S1.x	80MPa	1.8mm
	S1.y	11MPa	0.6mm
	S1.z	8MPa	0.03mm

Cavity posts and G11 posts – Quasi static simulations

S1.z | Deformations

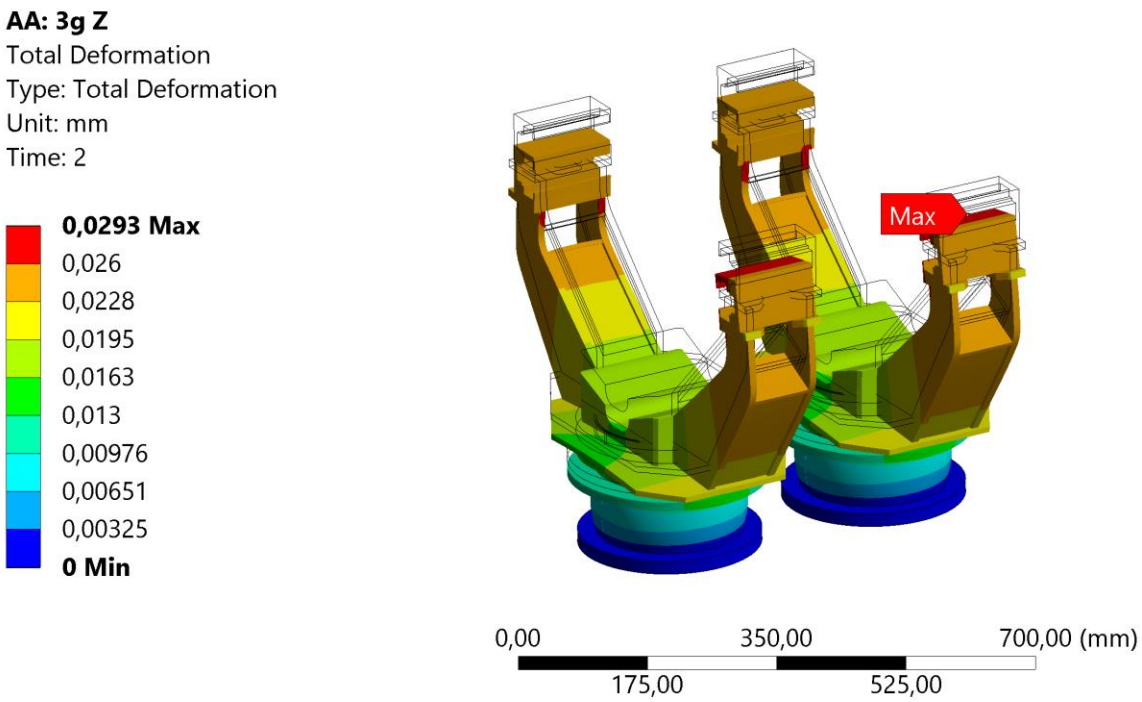

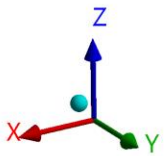

Type of simulations		Maximum	
		Stress	Displacements
S1	S1.x	80MPa	1.8mm
	S1.y	11MPa	0.6mm
	S1.z	8MPa	0.03mm

Cavity posts and G11 posts – Quasi static simulations

S1.z | Stress

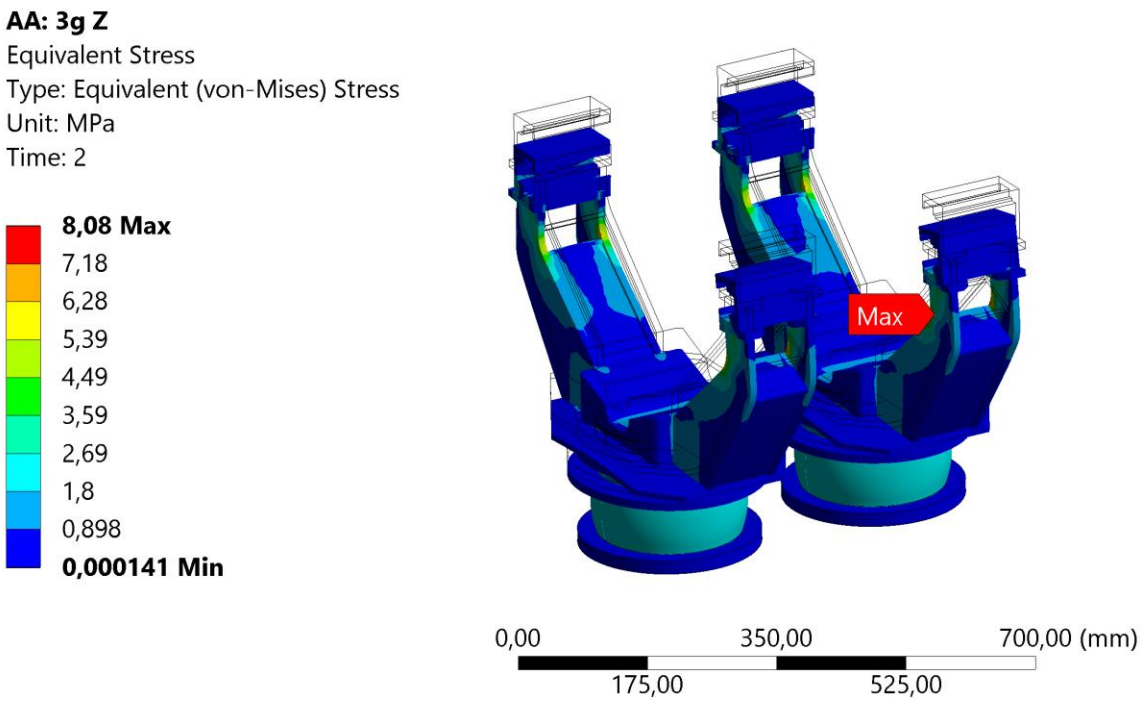

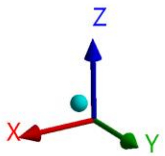

Type of simulations		Maximum	
		Stress	Displacements
S1	S1.x	80MPa	1.8mm
	S1.y	11MPa	0.6mm
	S1.z	8MPa	0.03mm