DE LA RECHERCHE À L'INDUSTRIE

LB650 MHz Cryomodule Overview

N. BAZIN

DRAFT

Outline

- Design strategy
- Description of the LB650 cryomodule
- Common parts between LB650 and HB650 cryomodules
- Assembly
- Interfaces

DRAFT

DESIGN STRATEGY

Design Strategy

Most of the PIP-II have the **same design concept**: the cavity string is supported by the **strongback** that stays at room temperature . There one configuration for the single spoke cryomodules and an other one for the elliptical cryomodules.

LB650 & HB650 Cryomodules:

- Same cavity design: β = 0.61 for LB cryomodule and β = 0.92 for LB cryomodule
- Same power coupler
- Similar frequency tuning system
- Similar configuration: 4 cavities for LB cryomodule, 6 cavities for HB cryomodule
- Smilar layout for the cryogenic circuits

DRAFT

LB650 cryomodule

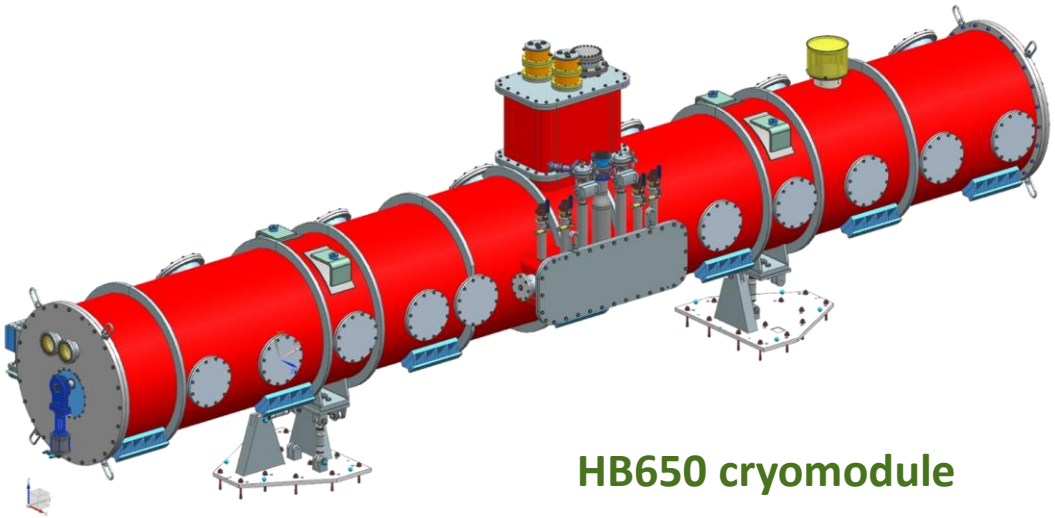

HB650 cryomodule

Design Strategy: Design Handbook

- PIP-II Design Principles Coordination Working Group:
  - To coordinate common engineering approach and design principals
  - To share lessons learnt and best engineering and design practices
- One representative of FNAL, CEA, CNRS and STFC
- Lessons learnt
  - From FNAL projects: LCLS-II (elliptical cavities), PIP-II SSR1 (spoke cavities) …
  - From CEA projects: IFMIF (half-wave resonators), SARAF (half-wave resonators), ESS (elliptical cavities) …
  - From CNRS projects: Spiral 2 (quater-wave resonators), ESS (spoke cavities) , MYRRHA (spoke cavities) …
- Release of the PIP-II Cryomodule Design Handbook (reference ED0011955) in December 2020

DRAFT

Design Strategy: Design Handbook

The PIP-II Cryomodule Design Handbook summarizes the best practices and lessons learned associated with cryomodules components design and specifications. This handbook is not intended to impose requirements but guidelines.

Cryomodule Design Handbook

ED0011955

Rev	Date	Description	Originated by
--	10/12/2020	First release	V. Roger N. Bazin D. Reynet M. Kane

Contents

1. Scope 4

2. Cryomodule component design 4

2.1. Design parameters 4
2.1.1. Environmental conditions 4
2.1.2. Pressure and vacuum 4
2.1.3. Temperature 4
2.1.4. Contamination and particulate control 4
2.1.5. Vibration 4
2.1.6. Interfaces 5
2.1.7. Space envelope 5
2.1.8. Installation and operations 5
2.2. Selection of raw materials 5
2.3. Material for vacuum systems 6
2.3.1. Selection of material for the beam line 6
2.3.2. Selection of material for the cryogenic lines and insulating vacuum 7
2.4. Magnetic hygiene 7
2.5. Components 8
2.5.1. Sheets and plates 8
2.5.2. Tubes / pipes 8
2.5.3. Bellows 8
2.5.4. Flexible tubes 8
2.5.5. Bi-metallic parts 8
2.5.6. Current leads 8
2.5.7. Flanges 8
2.5.8. Standard weld fittings 8
2.5.9. Fasteners 9
2.5.10. Thermal straps 9
2.5.11. MLI 9
2.5.12. Cable thermal intercepts 9
2.5.13. Cryogenic valves 9
2.6. Analysis 10
2.6.1. Analysis to support the design 10
2.6.2. Magnetic shield 10
2.6.3. Transportation analysis 10
2.7. Assembly process and alignment 10
2.8. General lessons learned 10
2.8.1. Decrease the number of components 10
2.8.2. "Virtual" leaks 10
2.8.3. Weldment 11
2.8.4. Weld joint design 11
2.8.5. Standard vacuum equipment 12

3. Procurement specifications and drawings notes 14

3.1. Vacuum components 14
3.2. Pressure tests 14
3.3. Weldments 14
3.4. Bellows 14
3.5. Flexible tubes 15
3.6. Bi-metallic parts 15
3.7. Thermal straps 15
3.8. Handling and transportation 15

4. Beam line fabrication 16

4.1. Manufacturing 16
4.1.1. Machining 16
4.1.2. Welding 16
4.1.3. Brazing 16
4.1.4. Finishing 16
4.2. Cleaning 17
4.3. Marking and labelling 17
4.4. Handling and transport 17

5. Cryogenic lines fabrication 18

5.1. Manufacturing 18
5.2. Cleaning 18
5.3. Marking and labelling 18
5.4. Handling and transport 18

6. Vacuum vessel fabrication 19

6.1. Manufacturing 19
6.2. Cleaning 19
6.3. Marking and labelling 19
6.4. Handling and transport 19

Design Strategy for the LB Cryomodule

- Benefit from the design of the HB cryomodule (which benefits from the design and assembly of SSR1 as presented during the HB Prototype Cryomodule Final Design Review) and later on the test of the HB prototype cryomodule

- Benefit from the test of SSR1 (validation of the strongback concept)

- Maximum reuse of components from the HB cryomodule

➡ Close collaboration between FNAL and CEA design team

  - Involvement of CEA in the design of the strongback for the HB cryomodule
  - Follow-up of the design of the HB cryomodule (regular video-meetings, presence to the reviews)
  - Visit of CEA design team to FNAL in March 2020 (just before the lockdown!)
  - Regular video-meetings on the design of the LB cryomodule
  - Very good sharing of information between CEA and FNAL

DRAFT

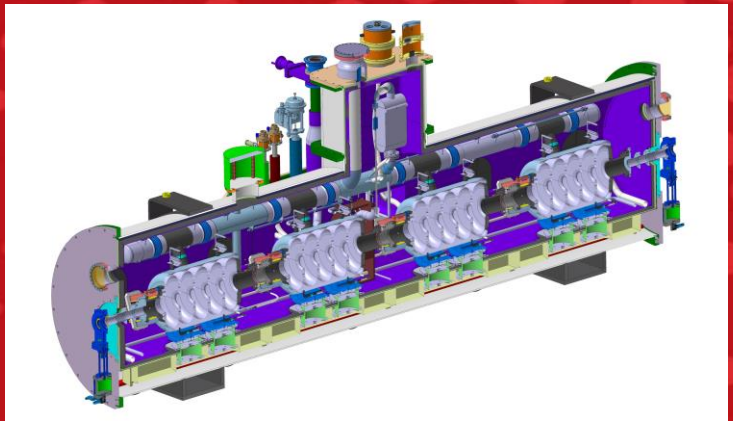

DESCRIPTION OF THE LB CRYOMODULE AND COMMON PARTS

Layout of the elliptical cryomodules

LB650 cryomodule

HB650 cryomodule

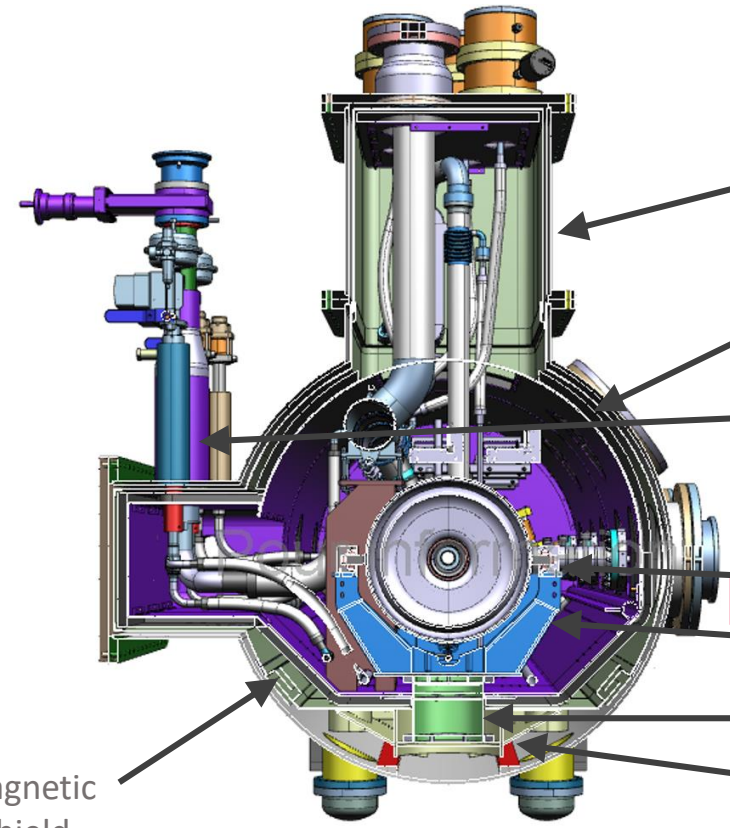

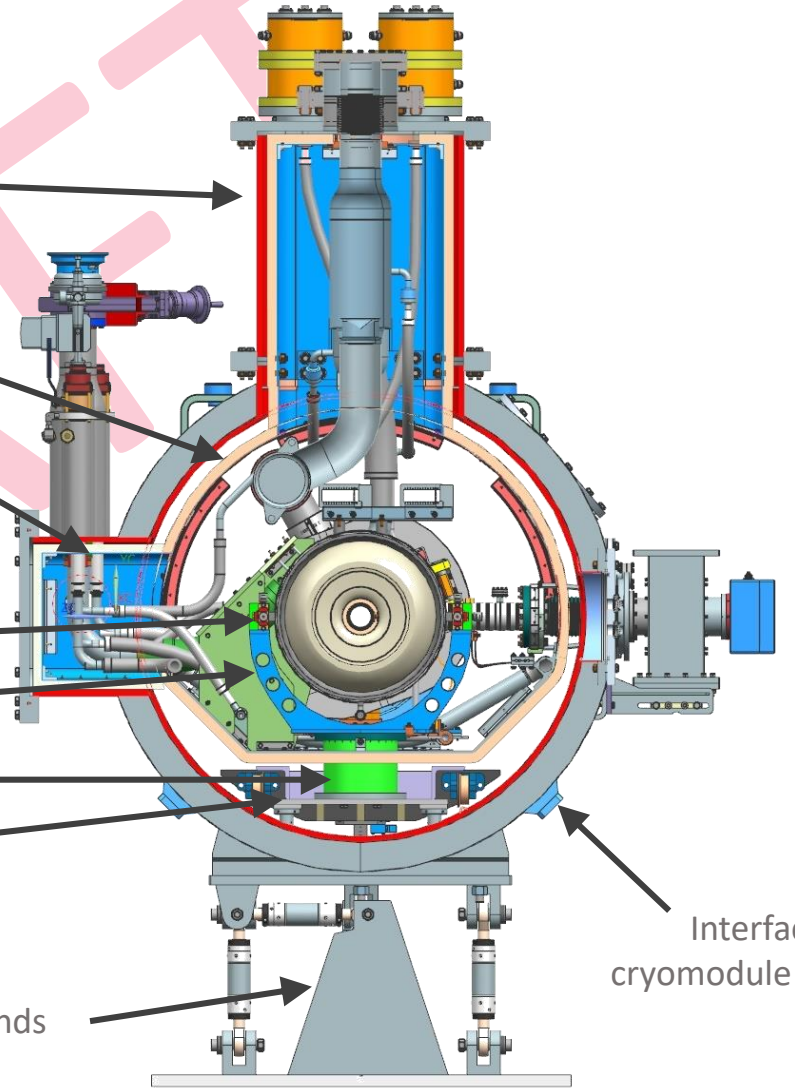

Vacuum vessel top port

Thermal shield + MLI

Cryogenic side port (bayonet and cryogenic valves)

C Clamp

Cavity support post

G11 support post

Strongback

Magnetic shield

Interface with the cryomodule transport frame

Cryomodule stands

DRAFT

Layout of the LB650 Cryomodule

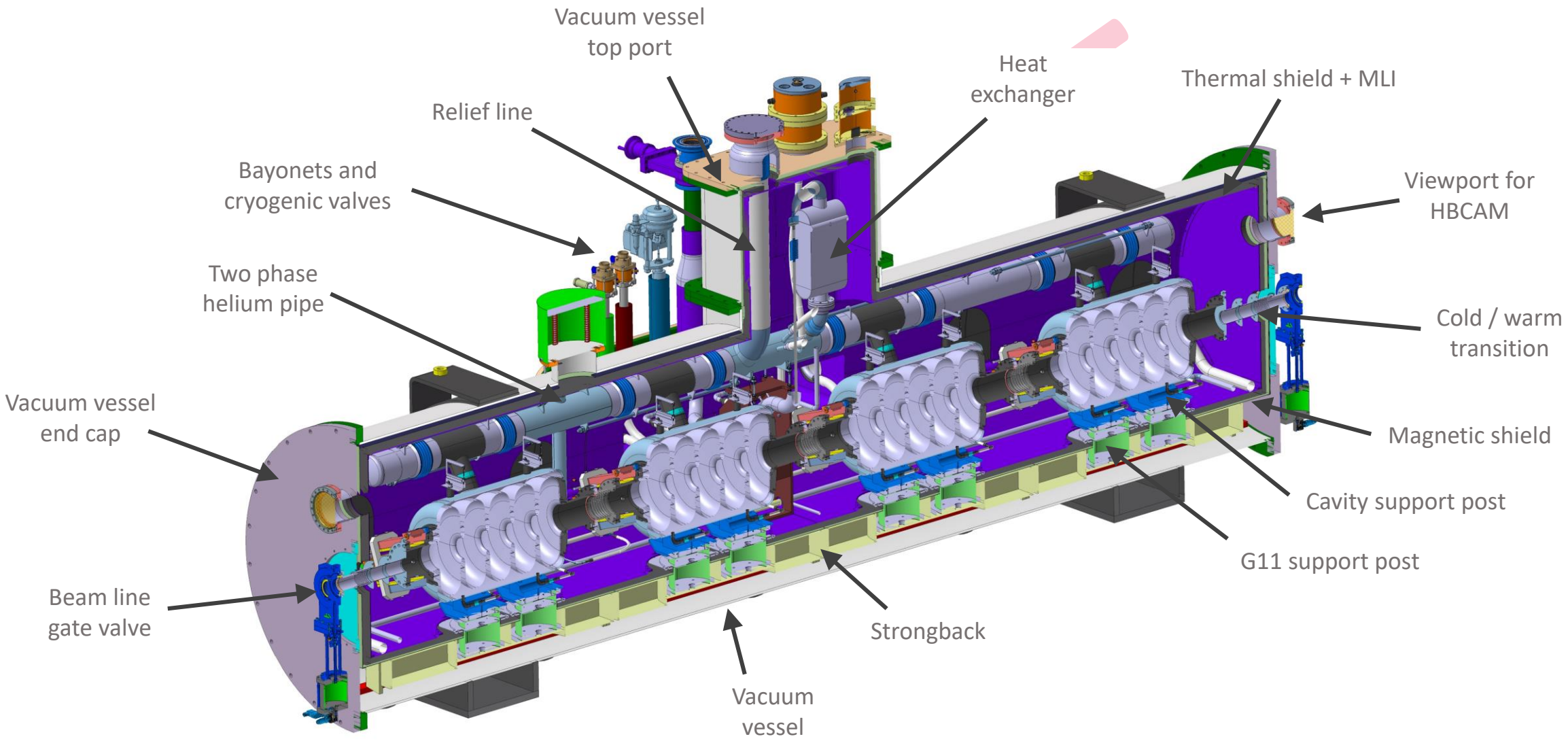

More details in the next presentations of session “Cryomodule Design”

Alignment: principle

- Each cavity is supported by two posts that are connected to the strongback
- Each cavity is attached to the two posts thanks to 4 C clamp assemblies
- The C clamp close to the power coupler fixes the position of the cavity and the three others allow motion in the horizontal plane due to thermal shrinkage during cool down
- The alignment of the cavity string is done before the insertion of the cold mass inside the vacuum vessel
- The strongback stays at room temperature, so the position of each cavity is fixed and the displacement is controlled to respect the alignment requirements

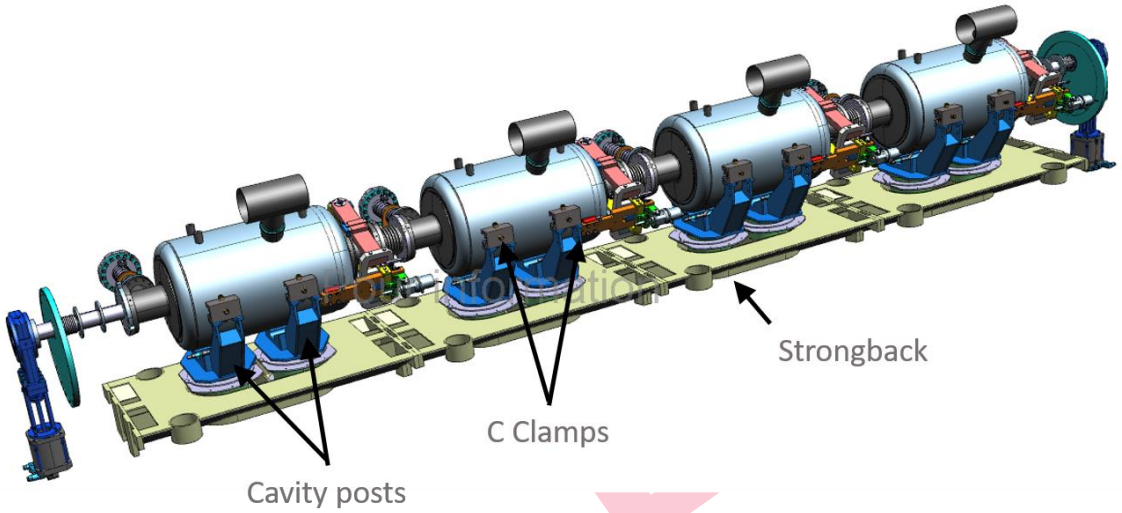

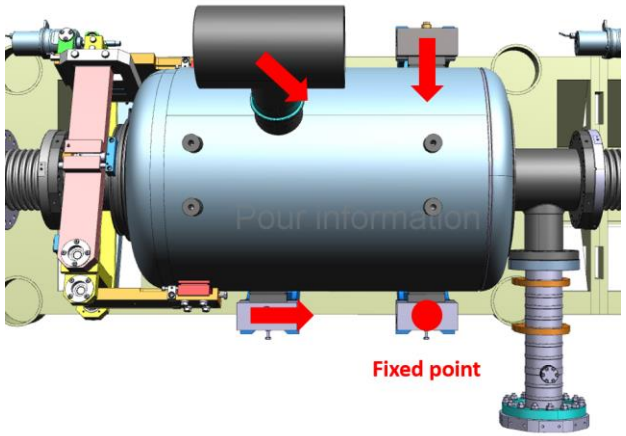

Motion of the cavity during cool down

More details in presentation PDR-LB650-D2-02 “Alignment and cavity posts”

Pour information
DRAFT

Alignment: survey

- Parler des HBCAM

DRAFT

Cryogenics: principle

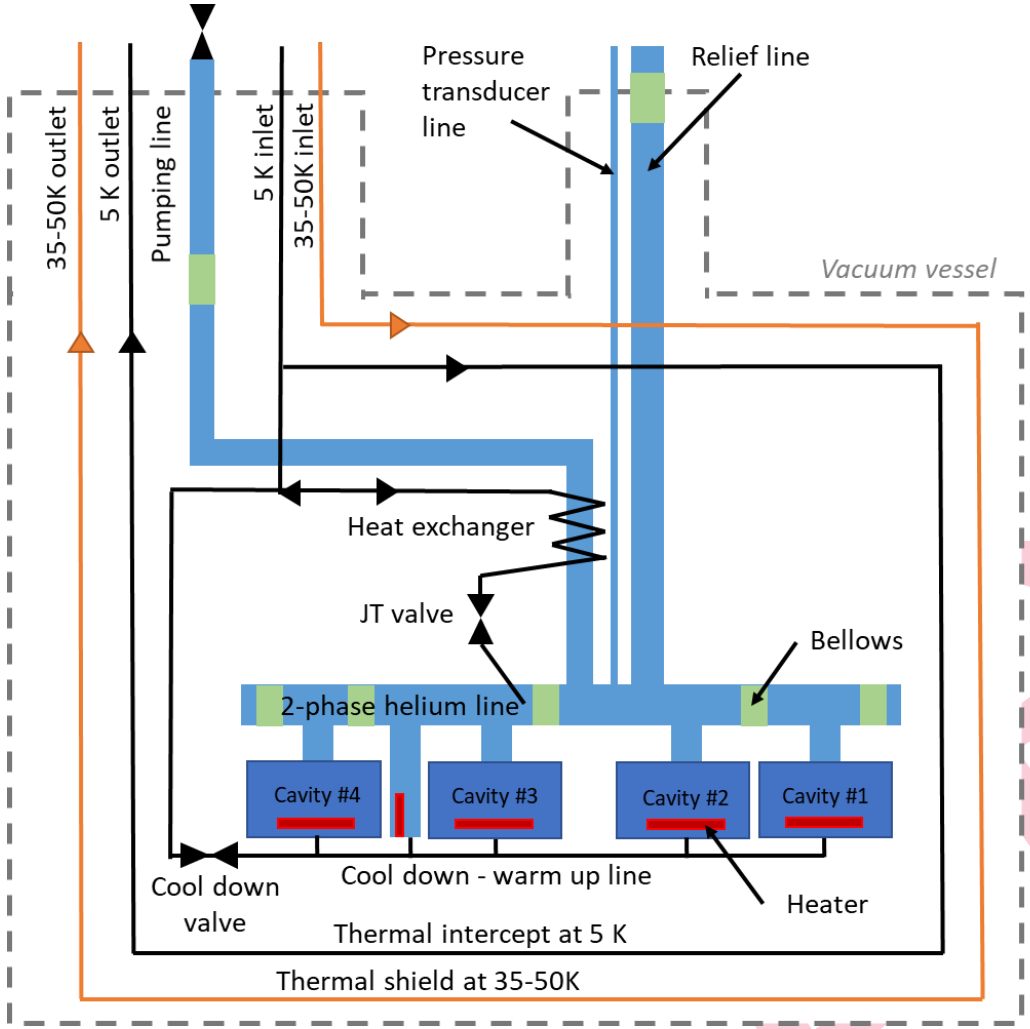

- Cryogenics principle similar to the HB cryomodule
- Working temperature of the cavities: 2 K
- 5 K line to cool down the cool mass but also used as thermal intercept
- Thermal shield at 35 – 50 K and cooled with pressurized helium gas
- Maximum Allowable Working Pressure (MAWP):
  - Cold mass: 4.1 bars
  - Thermal shield: 20 bars

DRAFT

More details in presentation PDR-LB650-D2-03 “Cryogenic lines”

Common parts between LB and HB cryomodules

- Support assemblies of the cavities: G11 posts, cavity posts and C clamp assemblies
- Heat exchanger (supplied by FNAL)
- Bayonets (supplied by FNAL)
- Cold – warm transition
- Bellows between cavities
- Thermal straps
- Instrumentation (sensors, cabling and flanges with feedthroughs supplied by FNAL)

Mettre des images

DRAFT

ASSEMBLY

Assembly: principle

DRAFT

More details in session “Cryomodule Assembly”

Assembly: principle

- **Step 1:** cavity string assembly in clean room

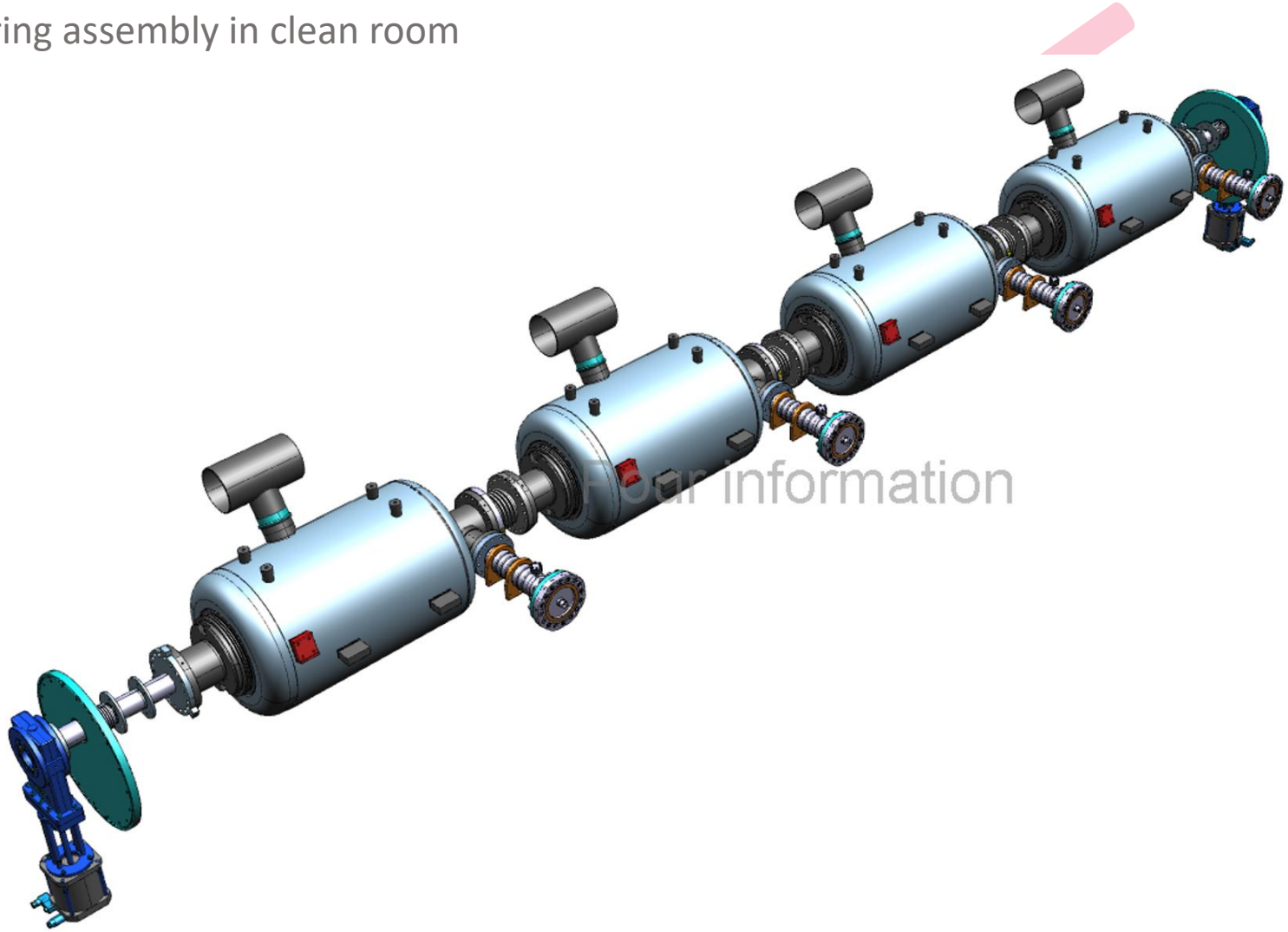

More details in session “Cryomodule Assembly”

Assembly: principle

▶ **Step 2:** preparation of the strongback

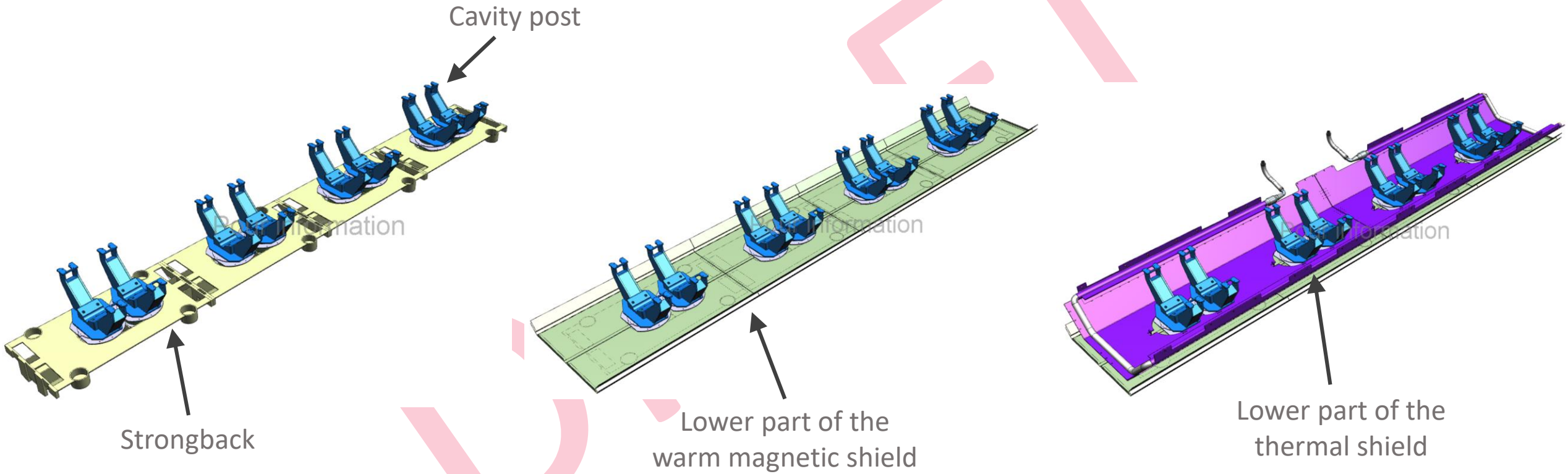

More details in session “Cryomodule Assembly”

Assembly: principle

- **Step 3:** installation of the cavity string on the strongback, cold mass assembly

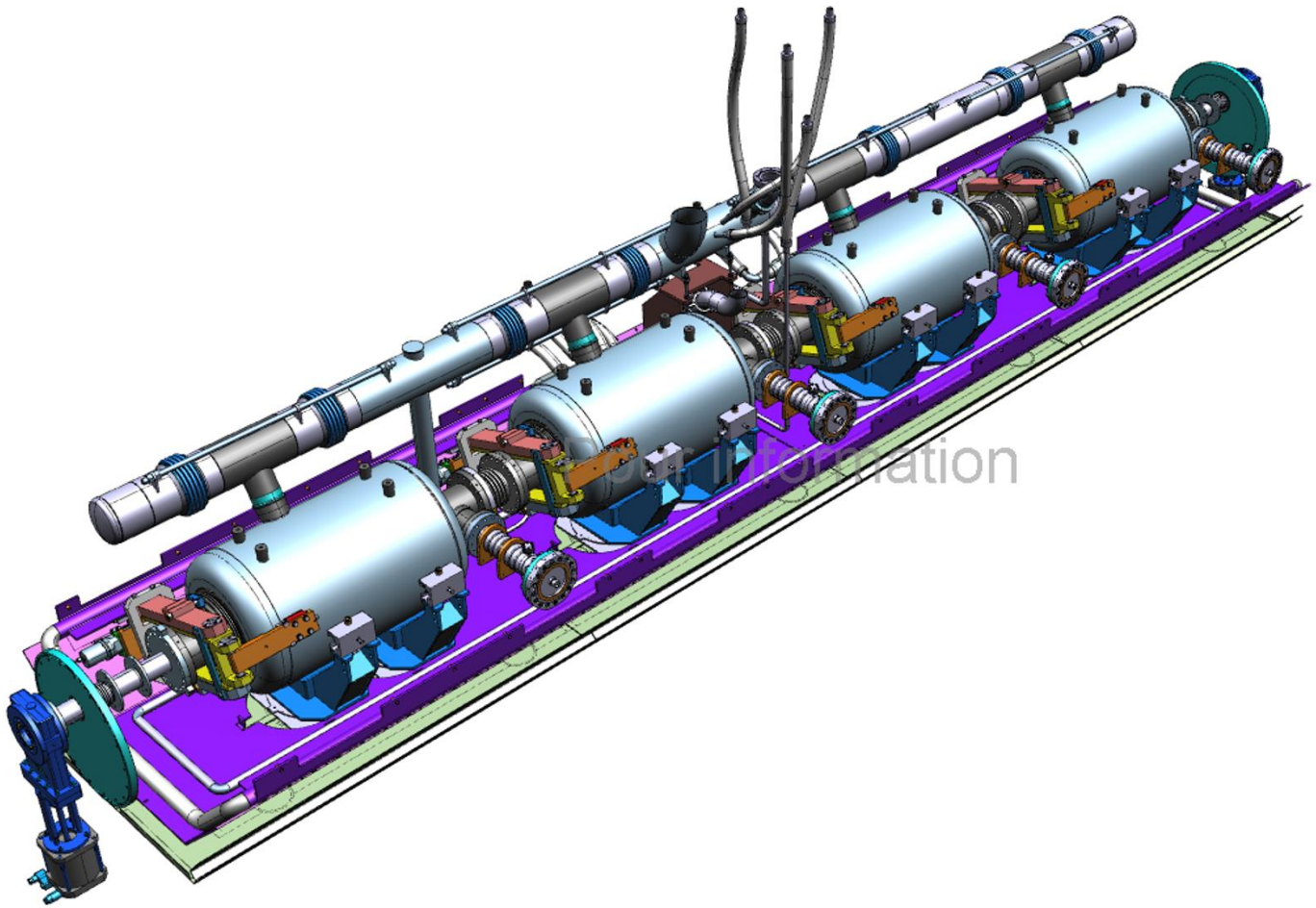

More details in session “Cryomodule Assembly”

Assembly: principle

- **Step 4:** installation of top parts of the thermal shield (covered by MLI), except for the extension top port ad the side port

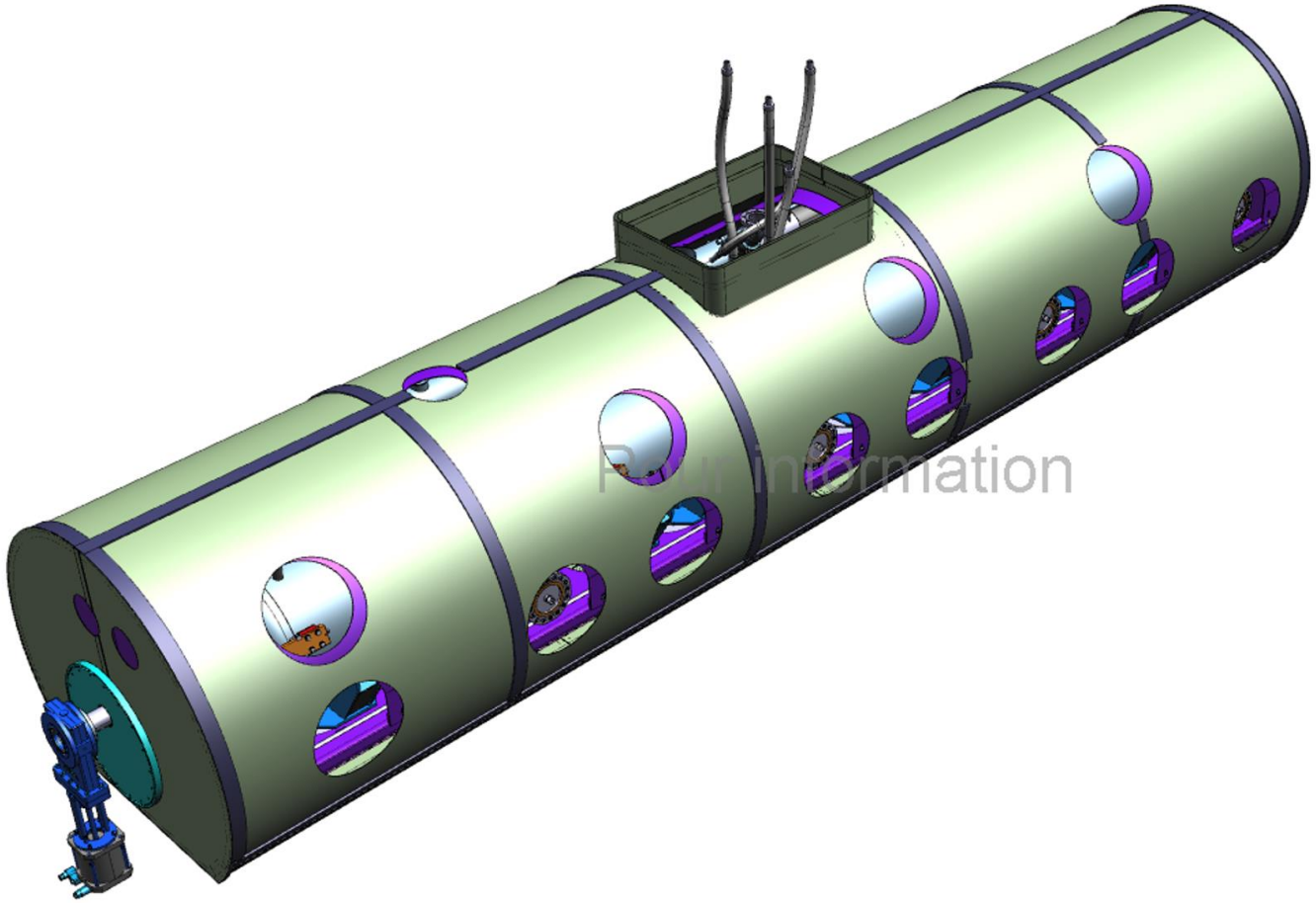

More details in session “Cryomodule Assembly”

Assembly: principle

- **Step 5:** insertion of the cold mass inside the vacuum vessel

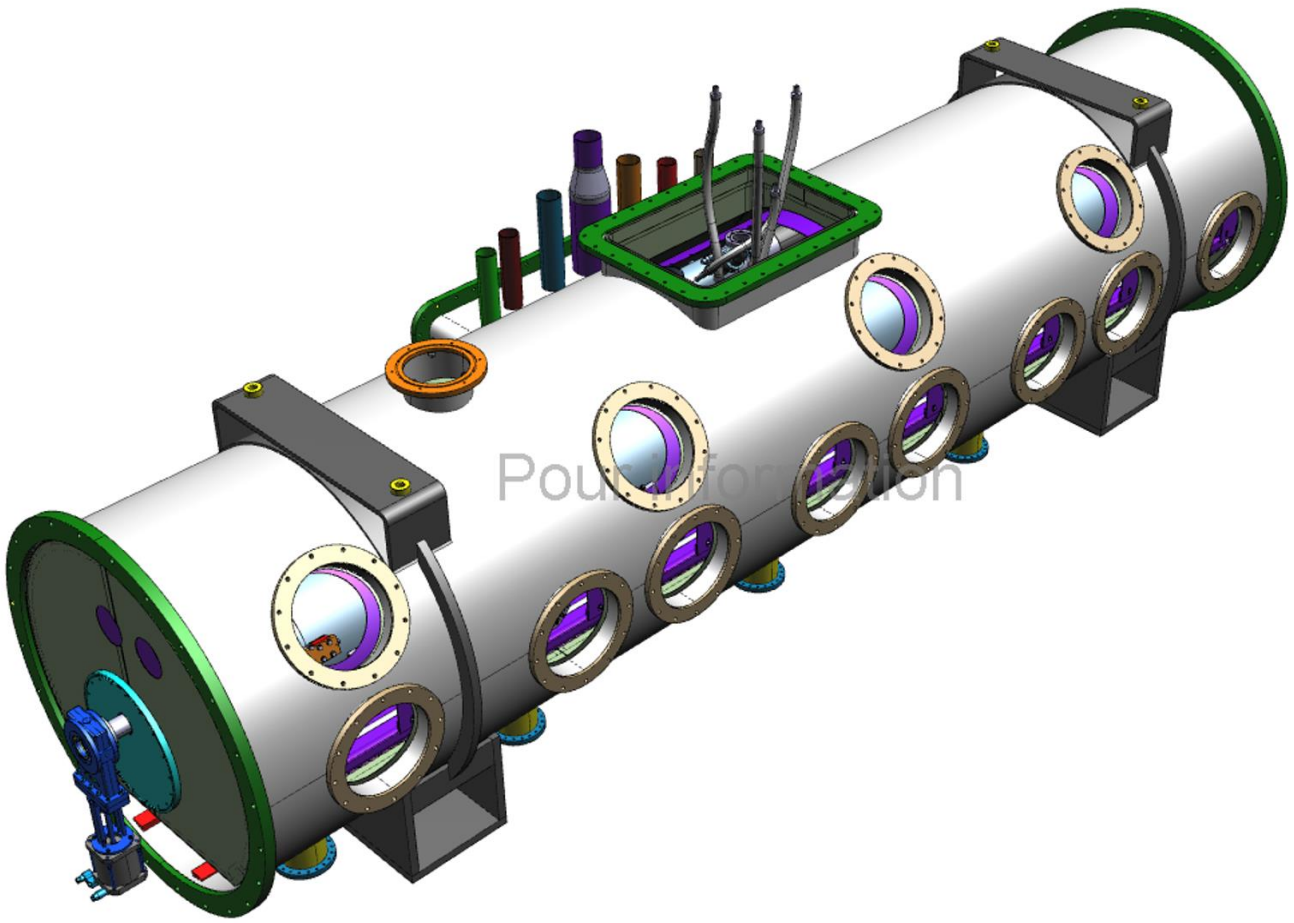

More details in session “Cryomodule Assembly”

Assembly: principle

- **Step 6:** completion of the cryogenic circuits and closing of the cryomodule

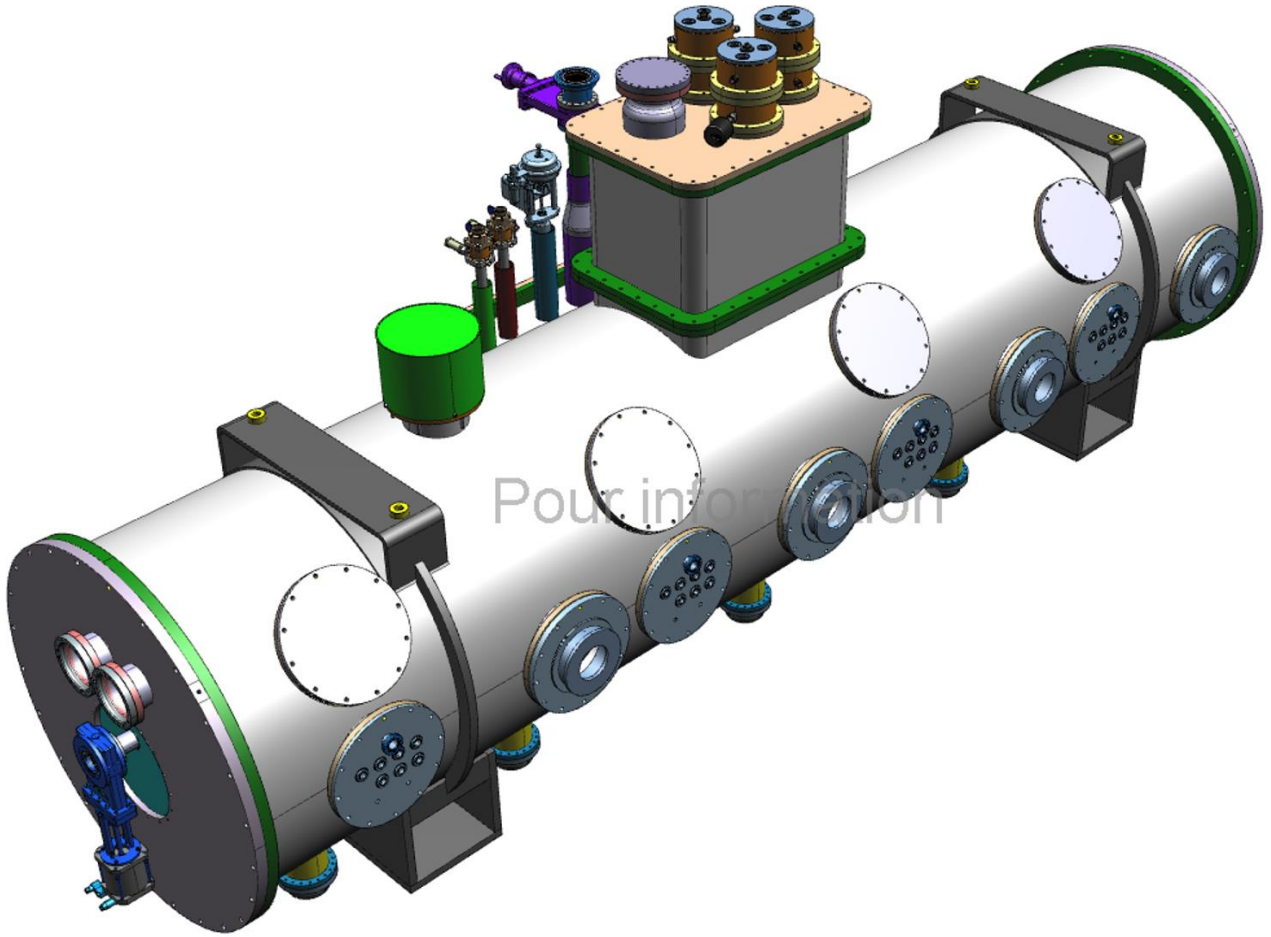

More details in session “Cryomodule Assembly”

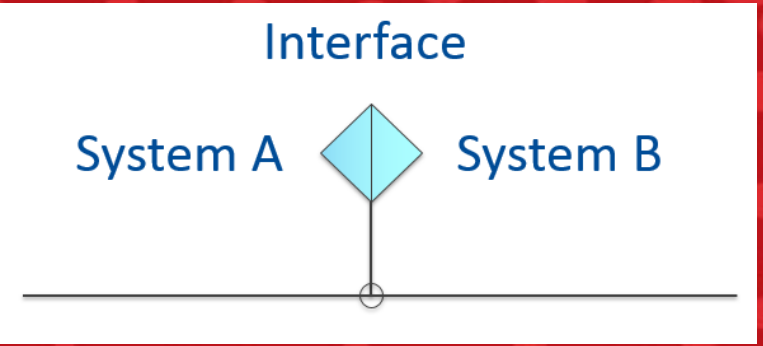

INTERFACES

Interface Management Process

- Interface management process is documented in the **PIP-II Interface Management Plan – ED0007942**

  "The Interface Management Plan provides a process to develop, control, identify, manage, verify, review, approve, release and revise technical interfaces for the PIP-II project."

- All the interfaces are listed in the **Master Interface Control Document (ICD) – ED0010433**
  - L3 to L3 interfaces ⇦ **« External » interfaces = between the LB650 cryomodule and other systems of the accelerator**
  - L3 to Fermilab external interfaces (i.e. to other accelerators/infrastructure)
  - Partner interfaces (Partner to Fermilab, Partner to Partner) ⇦ **« Internal » interfaces = between the components of the cryomodule procured by CEA and the ones provided by partners**
  - Below L3 at the discretion of the L2 Design Authority

Level 3 Interfaces and Partner Interfaces →	Highest control level (requires adherence to interface management plan)
Sub-Level 3 Interfaces →	Lowest control level (at the discretion of the L2 Design Authority)

Most of the information presented on this slide are taken from «PIP-II Interface Management Process », Alex Martinez, presentation at the PIP-II Technical Workshop, December 2020

DRAFT

Master Inteface Control Document (ICD)

- Provides general information on all PIP-II interfaces
- Each individual interface includes the following:
  - Unique Interface ID (using an ID matrix)
  - Interface Name
  - Different parties involved and their scope for the given interface: responsibles of systems A and B, but also the integrator (3rd party responsible for installation or supplying info)
  - Interface Documents (reference to Interface Specification Documents (ISDs), i.e documents providing details of interface)
  - Verification Information
- ICD managed by the Technical Integration Group (FNAL)

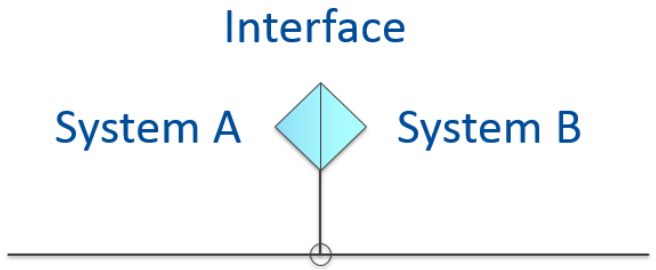

DRAFT

Information presented on this slide are taken from «PIP-II Interface Management Process », Alex Martinez, presentation at the PIP-II Technical Workshop, December 2020

Master Inteface Control Document (ICD)

PIP-II Master Interface Control Document (ICD) List

Warning: This ICD is subject to change. The current version is maintained in Teamcenter (ED0010433).

Search Criteria	System A WBS	System B WBS	Integrator WBS
Enter Search Criteria using yellow drop	*121.2.04 650MHz*		
		121.2.04 650MHz	
* includes all entries			*121.2.04 650MHz*

49 ←←← Number of entries satisfying this search

Revision Date: 01/10/2020

Note Macros need to be enabled in order for the search feature to function.

Unique L3-L3 ID	Interface #	Interface ID	Interface Name	Interface Requirements Description	Requirements Clarification	Verification Method	System A WBS	System A Scope	System B WBS	System B Scope	Integrator WBS	Integrator Scope	Requirements Documents	Interface Detail Documents	Status	Verification Documents	Comments
1972	003	1972-003	650MHz Control Valve Pneumatic Connection in the Linac	650MHz Control Valves shall connect to the Compressed Dry Air supply.		Inspection; Demonstration; Measurement	121.2.04 650MHz	650MHz shall specify compressed air flow and purity requirements and connection types and locations.	121.4.04 Bldgl	Bldgl shall provide an compressed air system, with connections and hoses as specified.	121.4.05 LI	LI shall install and connect compressed air hoses between compressed air header and control valves		ED000XXXX - LB650 CM ISD doc; ED0007562 - HB650 prototype CM ISD; ED000XXXX - HB650 production CM ISD; ED0012266 - Bldgl ISD			
1972	004	1972-004	650MHz CM Grounding Connection	Bldgl shall provide guidance on the proper grounding connection from the main grounding connection in the tunnel to the CM.		Inspection; Measurement	121.2.04 650MHz	650MHz shall define the grounding requirements for the CM as well as connection details.	121.4.04 Bldgl	Bldgl shall provide the grounding details and parameters to connect to the grounding infrastructure in the tunnel.	121.4.05 LI	121.4.05 LI shall provide installation support to 650MHz and Bldgl.	TBD	ED000XXXX - LB650 CM ISD doc; ED0007562 - HB650 prototype CM ISD; ED000XXXX - HB650 production CM ISD	TBD		
1973	001	1973-001	650MHz Cryomodule Stand - delivery	LI shall provide stands for the 650MHz cryomodules,	0-Interface	Demonstration	121.2.04 650MHz; 121.4.05 LI	650MHz owns the design of the interface plane. LI owns the design of the stand.	121.4.05 LI	LI prodvides the stand	121.4.05 LI	LI will integrate these systems within the PIP2 footprint		ED000XXXX - LB650 CM ISD doc; ED0007562 - HB650 prototype CM ISD; ED000XXXX - HB650 production CM ISD	TBD		
1973	002	1973-002	650MHz Tunnel CM Mover - delivery	LI shall provide a cryomodule mover to position the 650MHz CMs in the tunnel outside of crane coverage	0-Interface	Demonstration	121.2.04 650MHz; 121.4.05 LI	650MHz owns the design of the interface plane. LI owns the design of the mover	121.4.05 LI	LI prodvides the mover	121.4.05 LI	LI uses the mover		ED000XXXX - LB650 CM ISD doc; ED0007562 - HB650 prototype CM ISD; ED000XXXX - HB650 production CM ISD	TBD		
1973	003	1973-003	650MHz common requirements - rigging	The 650MHz CMs, or any dismountable part thereof bigger than what can be handled by a single individual, shall include rigging interfaces for vertical lifting with a crane. All lifting interfaces shall be clearly marked. Rigging components shall satisfy the requirements of the relevant FESHM chapters (e.g. marking of rigging components). All payload weights shall be clearly marked.	0-Interface	Inspection	121.2.04 650MHz; 121.4.05 LI	650MHz will define the design of the systems	121.2.04 650MHz	650MHz will provide the rigging interfaces	121.4.05 LI	LI will integrate these systems within the PIP2 footprint		ED000XXXX - LB650 CM ISD doc; ED0007562 - HB650 prototype CM ISD; ED000XXXX - HB650 production CM ISD	TBD		
1973	004	1973-004	650MHz common requirements - geometry and envelope	The 650MHz shall meet the geometry and interface requirements of the referenced interface specification drawing	0-Interface	Inspection	121.2.04 650MHz; 121.4.05 LI	650MHz will define the geometry of the systems	121.2.04 650MHz	650MHz will deliver the systems	121.4.05 LI	LI will integrate these systems within the PIP2 footprint		Interface drawing for transverse envelopes: F10127878	TBD		Drawing put into Workflow on 2019-Oct-08
1975	001	1975-001	650MHz CM Alignment	650MHz CM alignment system shall include interfaces for measuring the alignment of the beam-line components; and interfaces for supporting and aligning the entire cryomodule	650MHz CM Alignment shall describe Fiducial mounts, View ports, Wire targets and CM mounting/support brackets	Inspection; Measurement	121.2.04 650MHz	650MHz shall specify locations and mechanical parameters of fiducials, view ports, wire targets and cryomodule mounting brackets	121.4.07 AP	AP shall review and approve specifications on the 650MHz CMs alignment system, provide the installation requirements and develop an acceptance testing procedure	121.4.05 LI; 121.4.07 AP	LI shall provide alignment support for 650MHz CM and perform the acceptance test	ED0001830 - LB650 CM FRS; ED0001322 - HB650 CM FRS; ED0005336 - PIP-II LINAC ALIGNMENT	ED000XXXX - LB650 CM ISD doc; ED0007562 - HB650 prototype CM ISD; ED000XXXX - HB650 production CM ISD	TBD	ED000xxx - Acceptance Test Report	Confirm that AP scope is appropriate for an interface, and not just 'scope definition'. AP is also listed as an integrator but does not have any scope assigned

- 49 interfaces for the 650 MHz cryomodules
- The ones for the LB cryomodules only focus on the installation in the accelerator tunnel and operation (« external »interfaces)

➡ Future work: revise ICD with the PIP-II Technical Integration Group and L2 / L3 managers and work on the Interface Specification Documents

L3 to L3 Interfaces

- L3 to L3 interfaces (i.e. “external” interfaces, between the LB650 cryomodule and other systems of the accelerator – warm sections, cryogenic distribution system, RF power, control system …) are defined by FNAL
- The design of the components of cryomodule is adapted accordingly by CEA
- **Example 1:** interface between the stand and the cryomodule

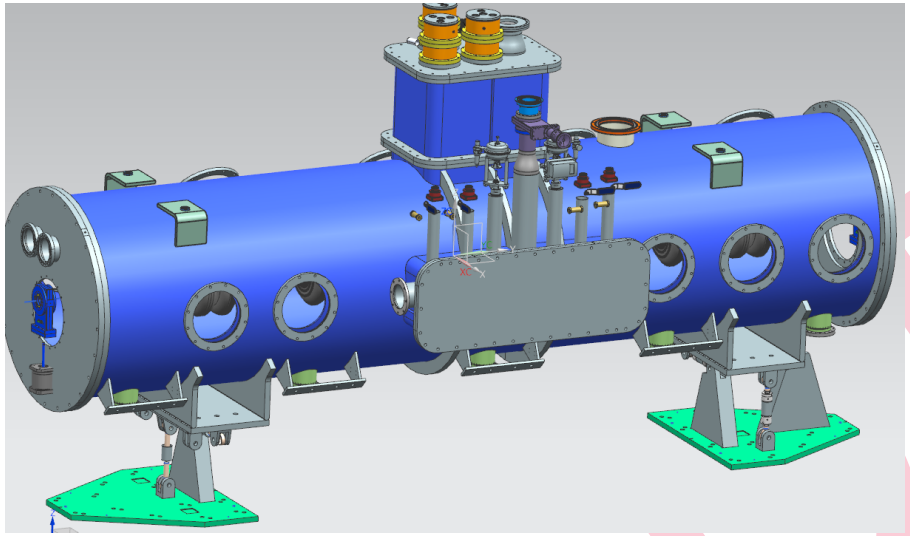

- Stand defined by FNAL (identical for all the spoke and elliptical cryomodules)
- Interface drawings issued by FNAL
- The bottom surface of the feet of the vacuum vessel will be designed to fit the stand

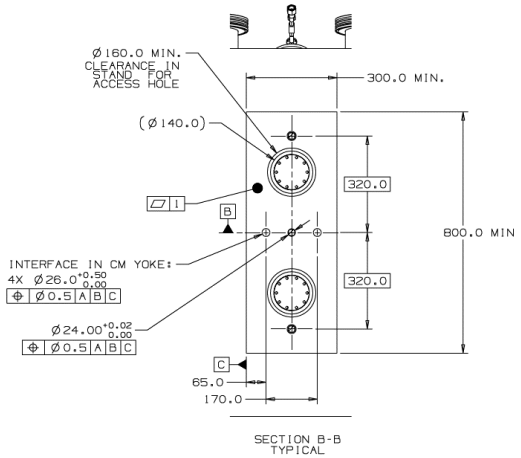

DRAFT
Pour information

L3 to L3 Interfaces

▶ **Example 2:** interface between the cryomodule and the cryogenic distribution system

- Bayonets defined by FNAL
- Requests on positions from FNAL:

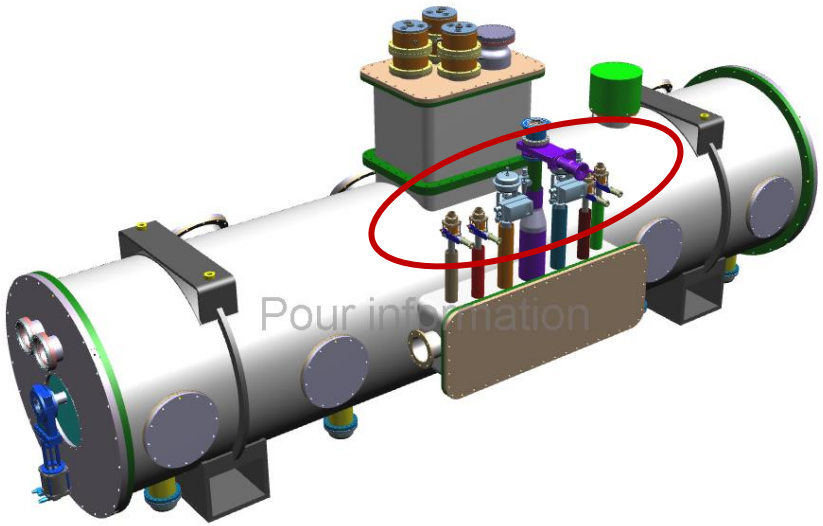

Bayonet Positions

- What is needed
  - Bayonet positions w.r.t. each other should be consistent between cryomodule types
  - Bayonet positions relative to cryomodule center must be defined very soon
    - "cryomodule center" is the point midway between beamline gate valve outer flanges
  - Position of relief line connections also needs to be frozen (less critical)
- Why it's needed
  - PIP2IT test stand:
    - LB650 will be interfaced to same transferline and bayonets as HB650
    - Ideally would use the same U-tubes for both LB and HB modules
  - PIP-II
    - PIP-II cryogenic distribution system design is already mature
    - Need interface confirmation to finish design
- Interface Contact – Andrew Dalesandro (FNAL)
- Drawing – F10144867

5 11/12/2020 LB650 Interfaces - Installation Perspective

L3 to L3 Interfaces

- Interface drawing provided by FNAL for the HB cryomodule:

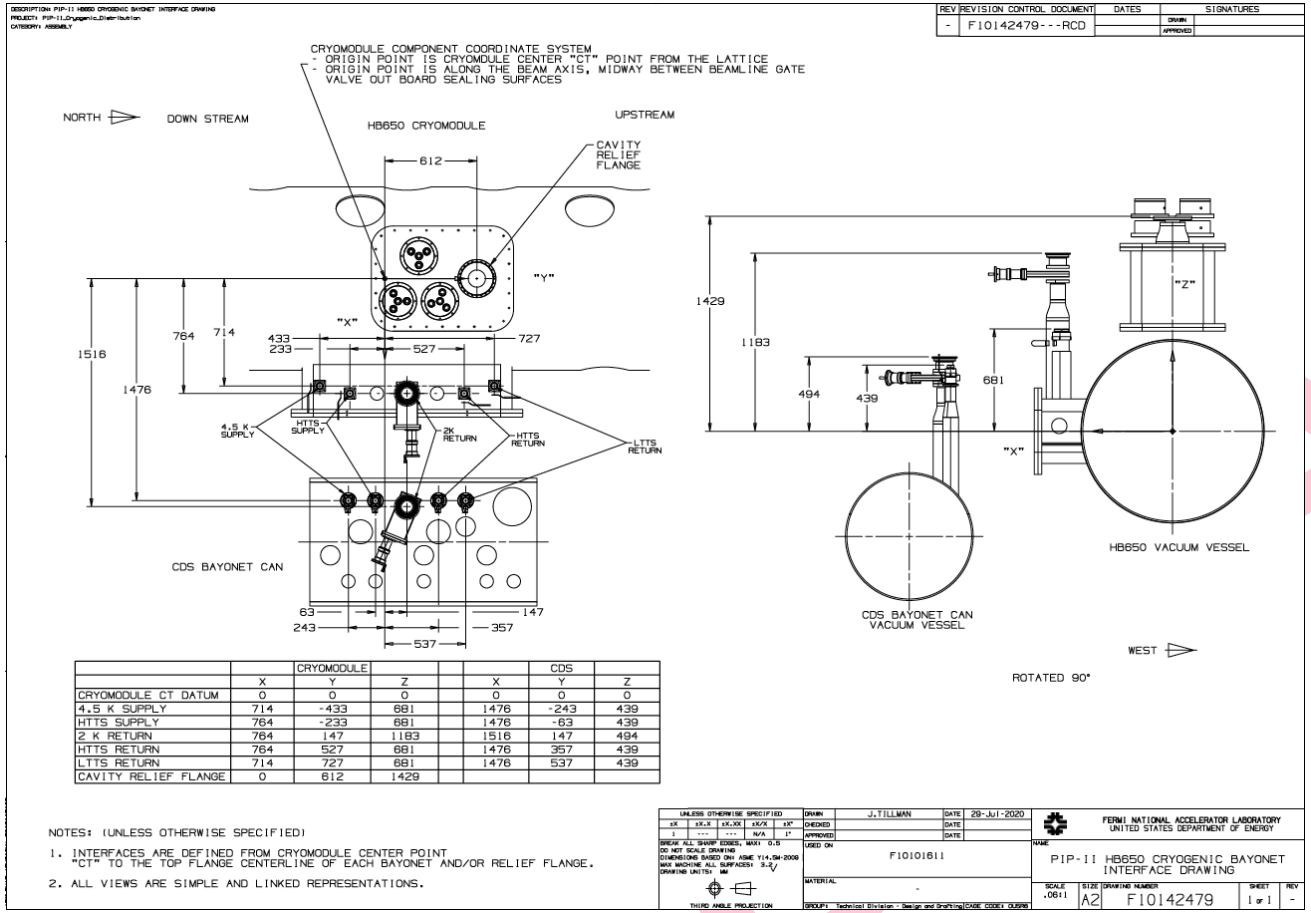

	CRYOMODULE			CDS		
	X	Y	Z	X	Y	Z
CRYOMODULE CT DATUM	0	0	0	0	0	0
4.5 K SUPPLY	714	-433	681	1476	-243	439
HTTS SUPPLY	764	-233	681	1476	-63	439
2 K RETURN	764	147	1183	1516	147	494
HTTS RETURN	764	527	681	1476	357	439
LTTS RETURN	714	727	681	1476	537	439
CAVITY RELIEF FLANGE	0	612	1429			

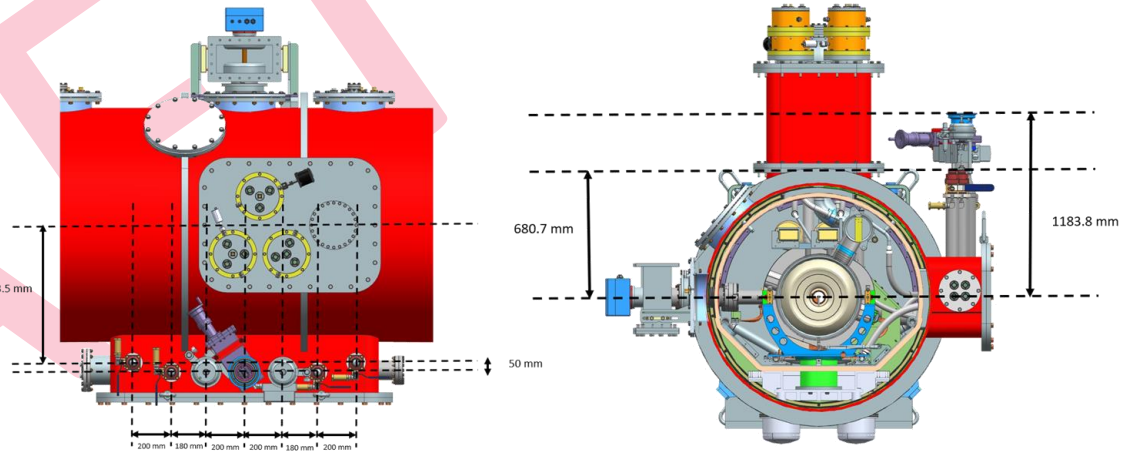

From the presentations of the «Cryomodule Bayonet Layout» session, PIP-II Cryogenic Integrated Workshop, February 2021

- For the LB cryomodule, **the goal is to have the same interface**, but it will depends on the detailed design of the cryogenic circuit. The values could be slightly different.

L3 to L3 Interfaces

- Some L3 to L3 interfaces are still under discussions, but not big impact on the design of the cryomodule
- **Example:** interface with the mover

Interfaces for Cryomodule Mover

- What is needed
  - Cryomodule mover transports module inside the tunnel
  - Mover will support cryomodule from below, between stand locations
  - Need a bearing surface for cryomodule mover
  - Could potentially be combined with long-distance transportation features
  - Commonality with HB650 features would be preferred
- Why it's needed
  - PIP-II
    - One mover system will be used for all SSR and 650 cryomodule styles
- Interface Contact – Curt Baffes (FNAL)

12 11/12/2020 LB650 Interfaces - Installation Perspective

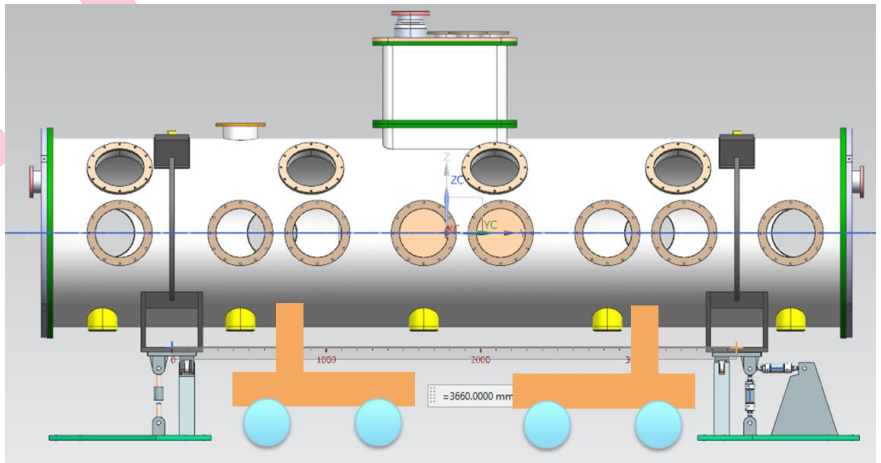

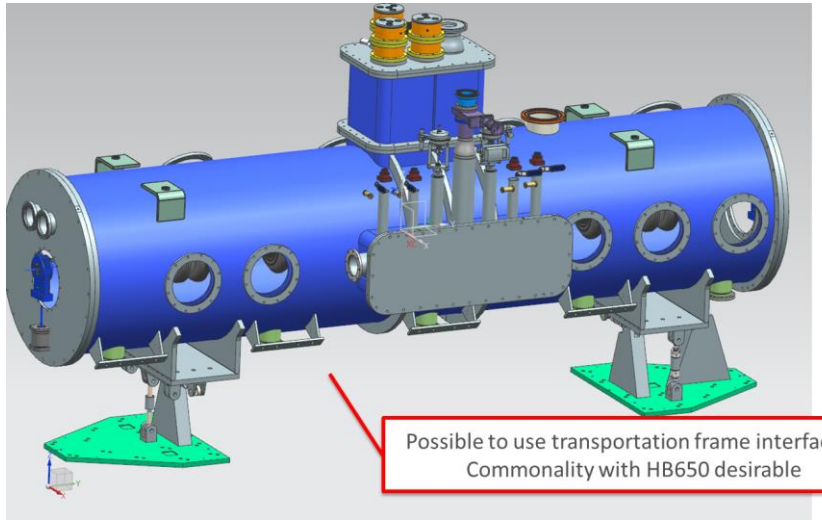

Partner Interfaces

- LB650 cavity: configuration of the beam flange is under discussion
  - Cones for the alignment process (T probe)
  - Interface with the clean room tooling

Mettre des images

DRAFT