Updates for R&D phase deliverables

CONDUCTION COOLED SSR MAGNET ASSEMBLY FOR PIP~II

Electromagnetic Application Section

Electromagnetic Applications & Instrumentation Division

Thermal strap connection for beam pipe and magnet

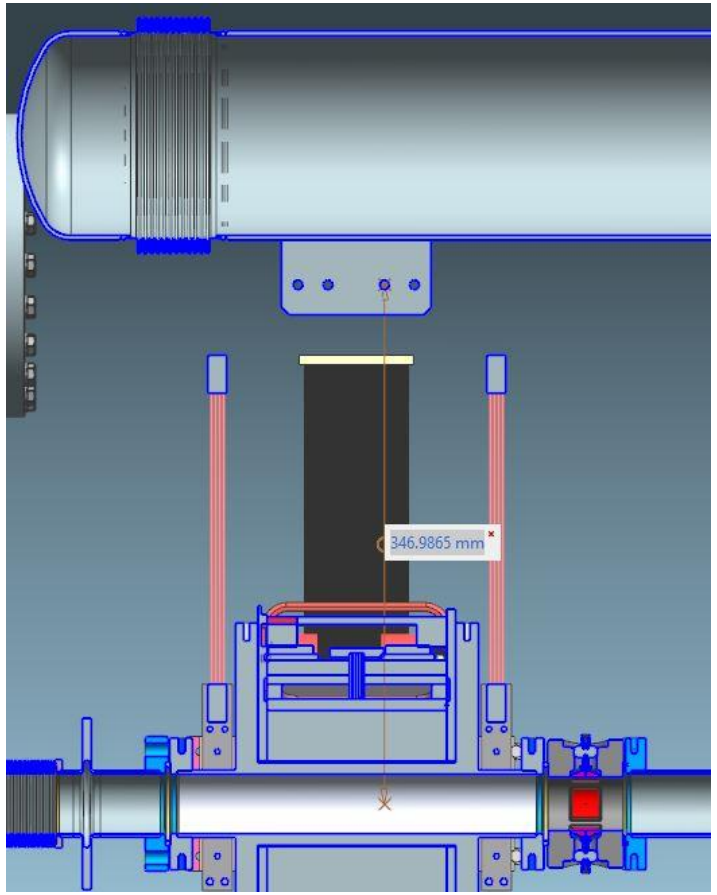

Earlier terminal configuration for the beam pipe strap

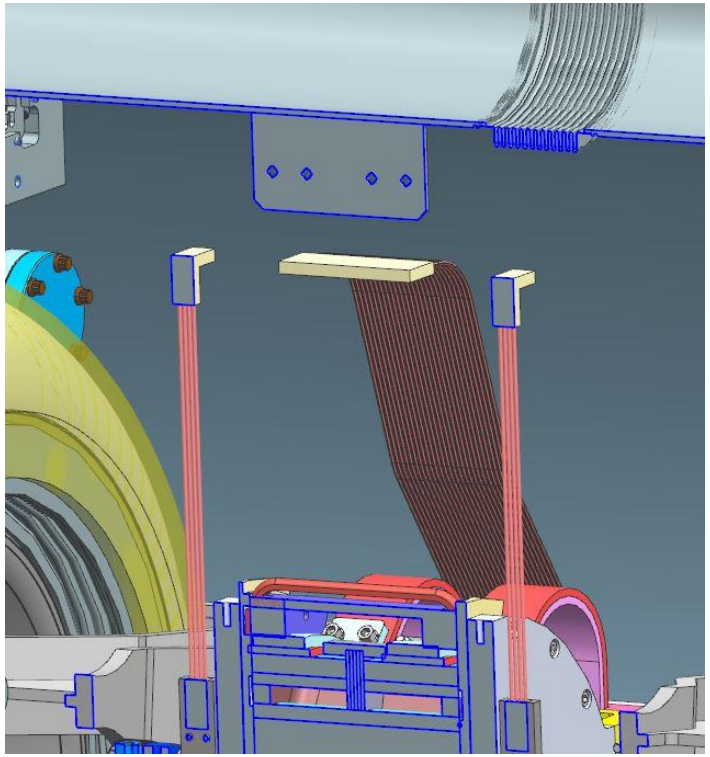

Recent changes for the terminal configuration for the beam pipe strap

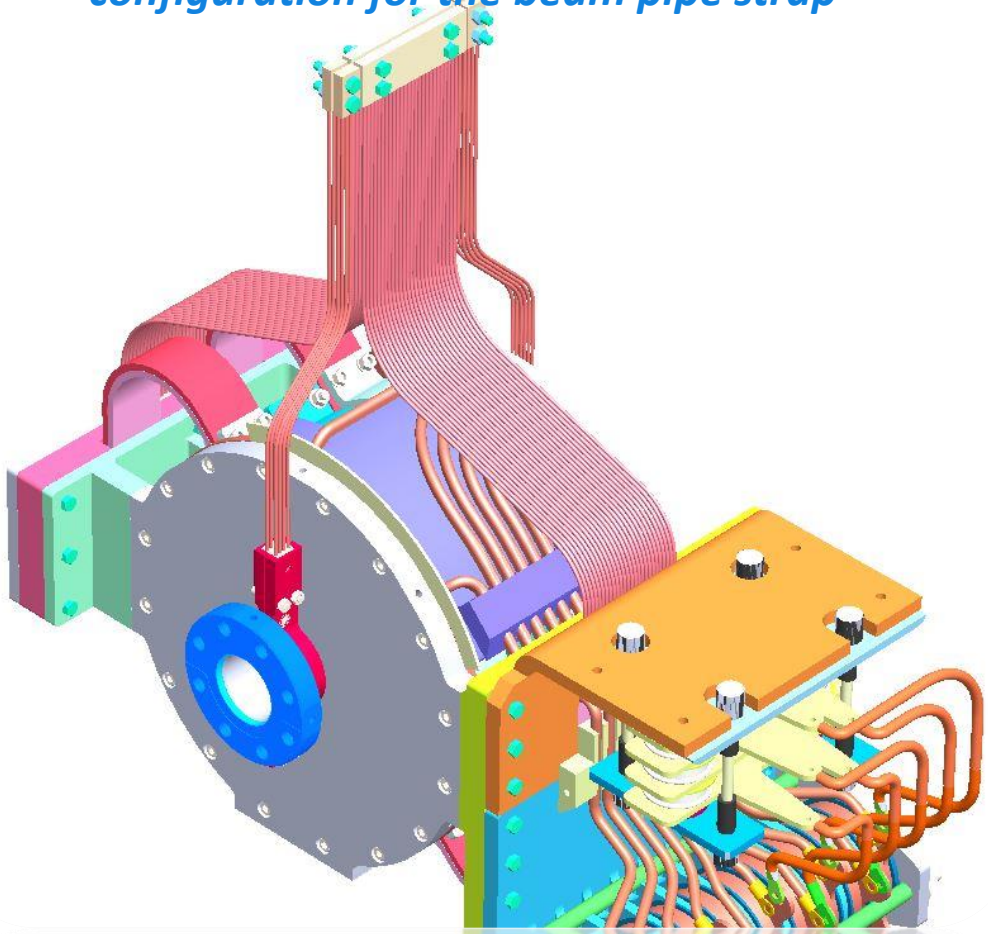

Beam pipe strap moved to vertical tap position on 2K phase pipe

Maximum permissible width ?

Thermal strap connection for beam pipe and magnet

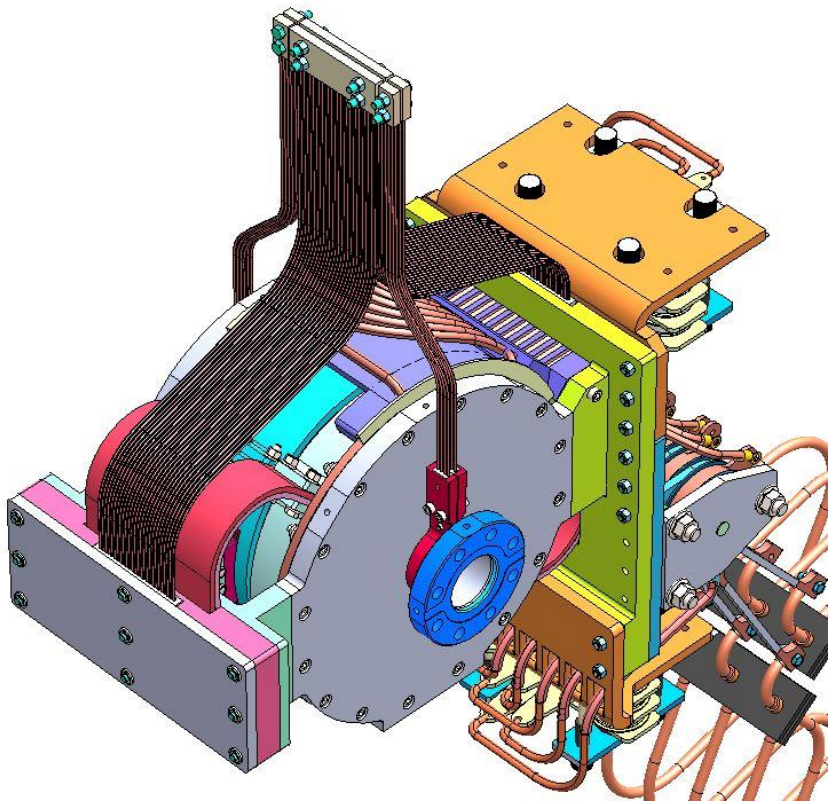

Dimensions of strap terminal

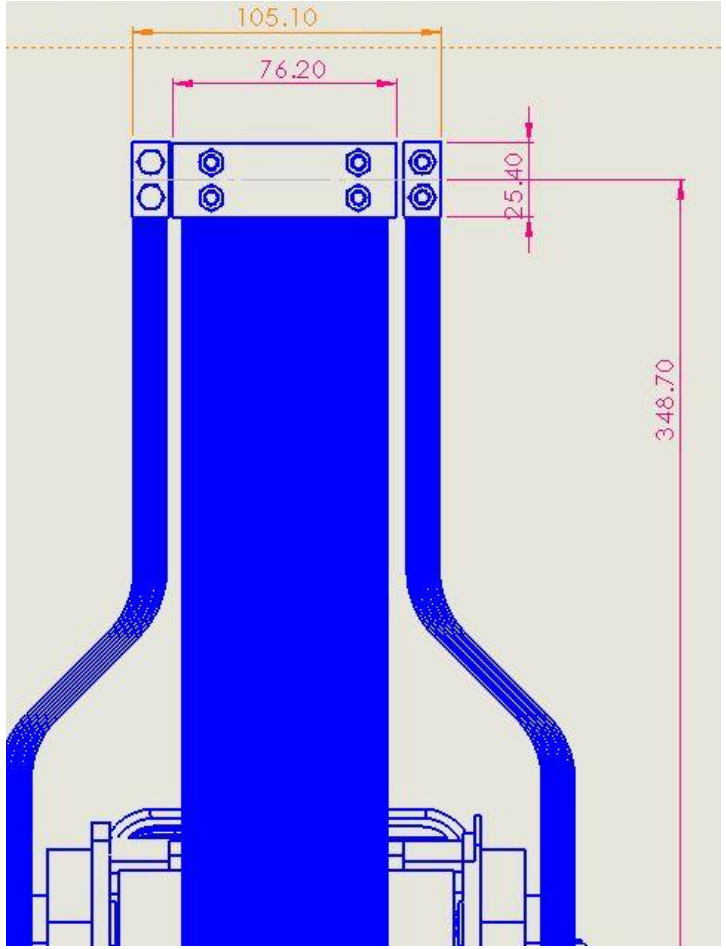

Distance from magnet centerline

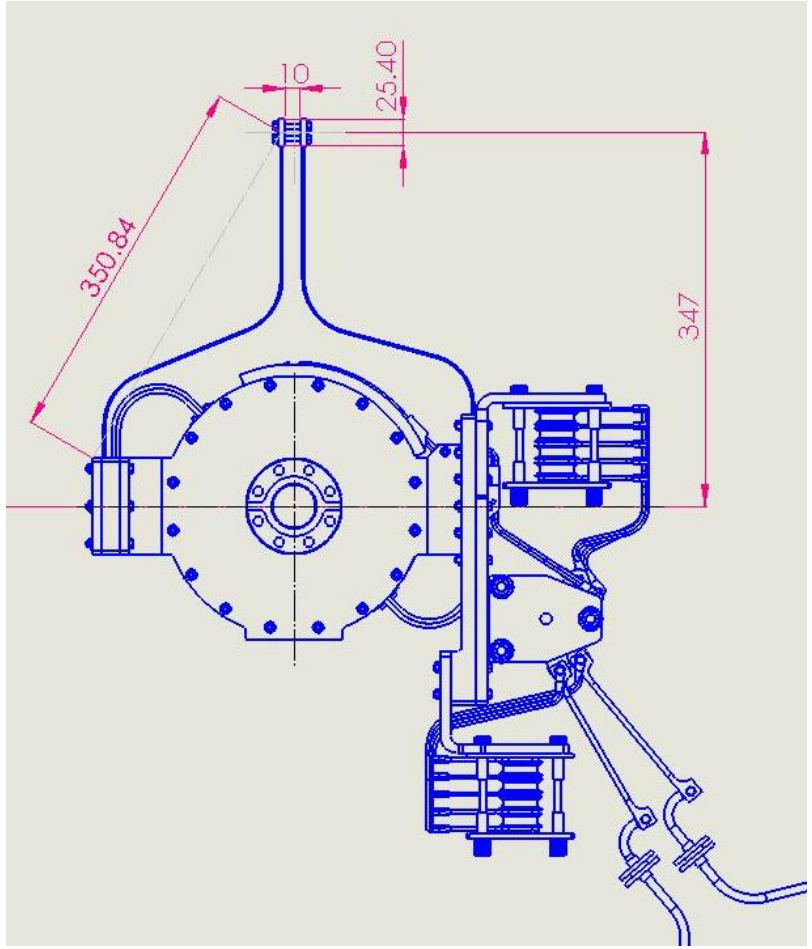

Relative permeability measurement on the fabricated bobbin

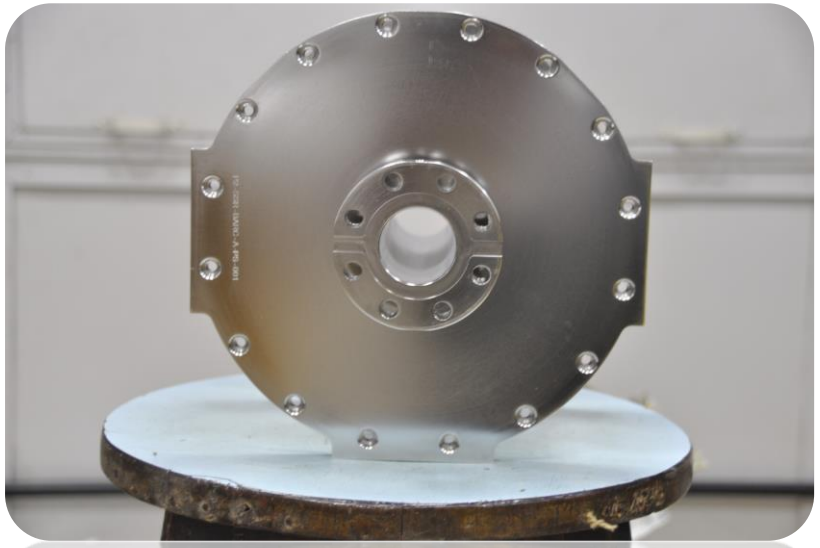

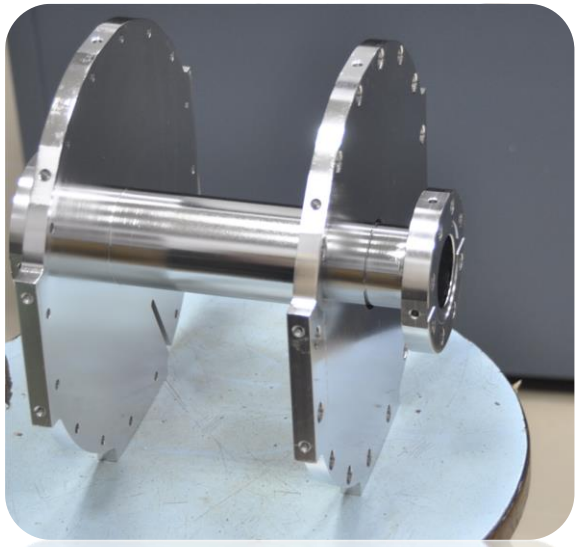

Flange-B
Inside face

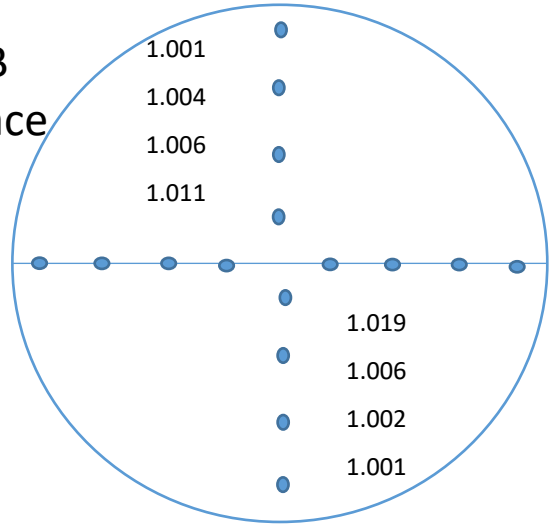

Flange-A
Outside face

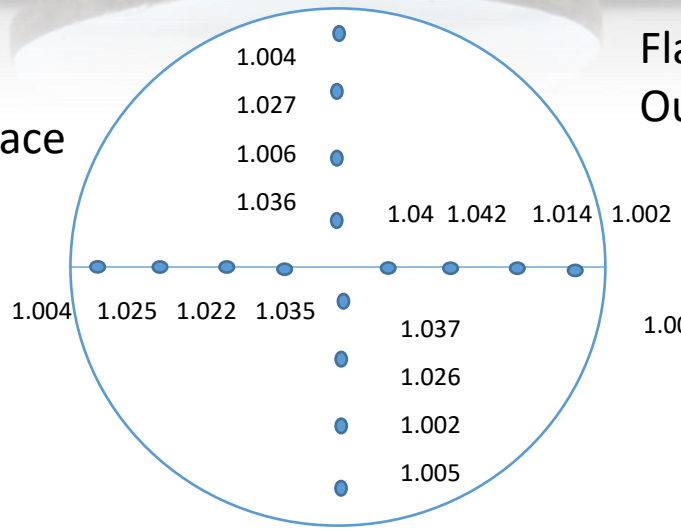

Flange-B
Outside face

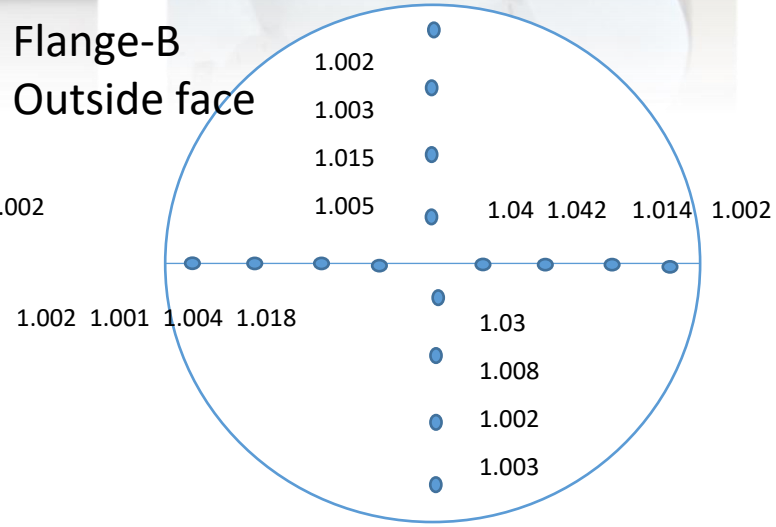

Flange-A
Inside face

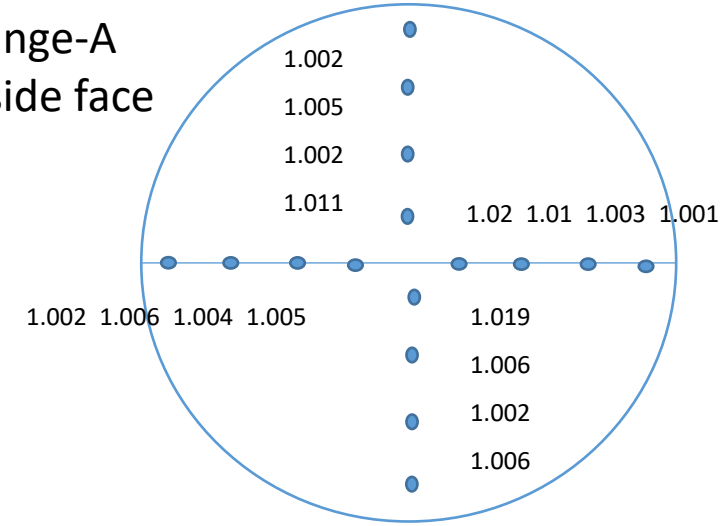

Thermal straps and heat sinks

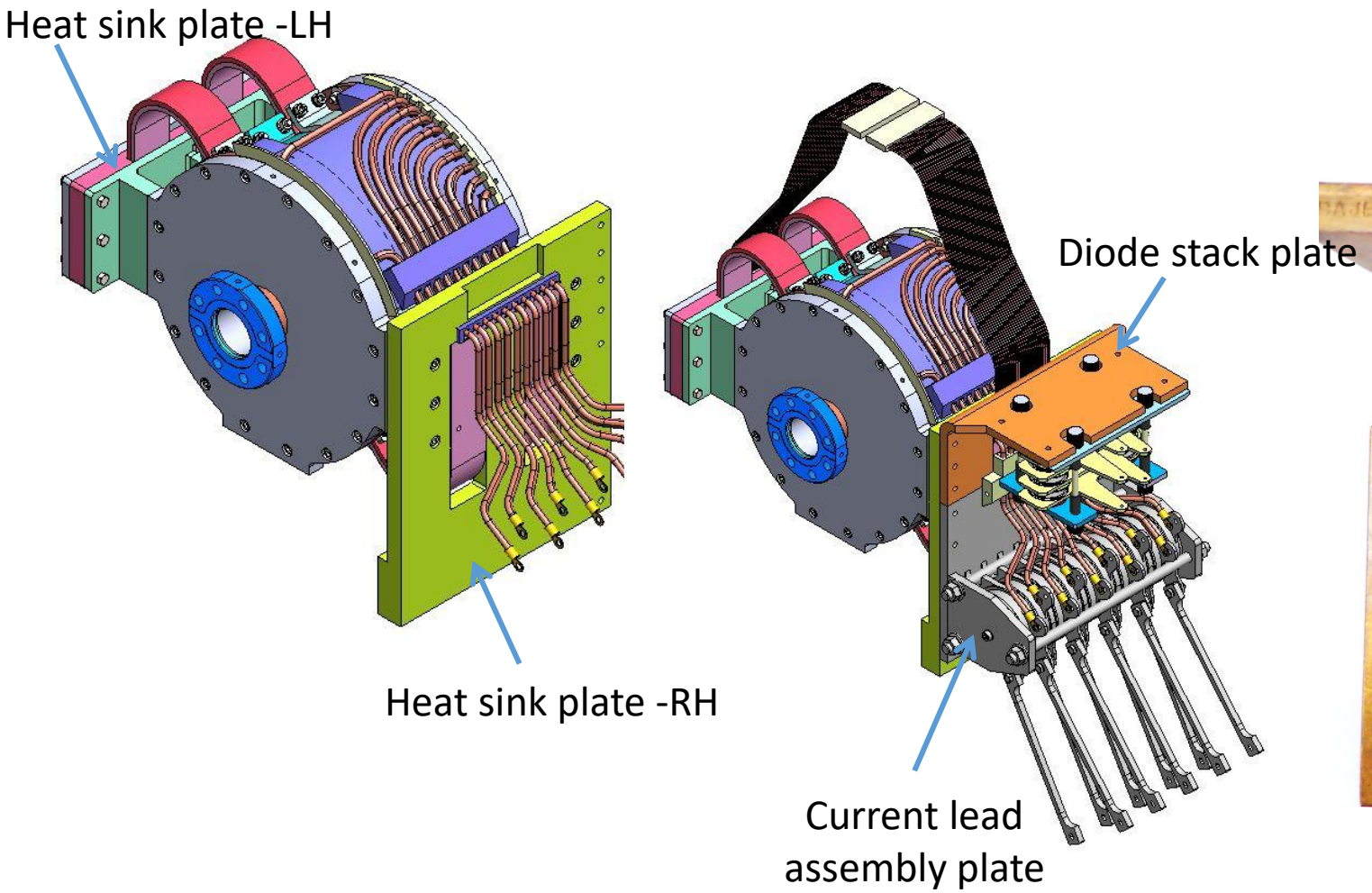

Aluminium 1060 alloy being used for heat sink plates
Specified thermal conductivity 234 (W/mK) @25^{0}C

Images of thermal straps proposed to be used

Diode connections and voltage taps

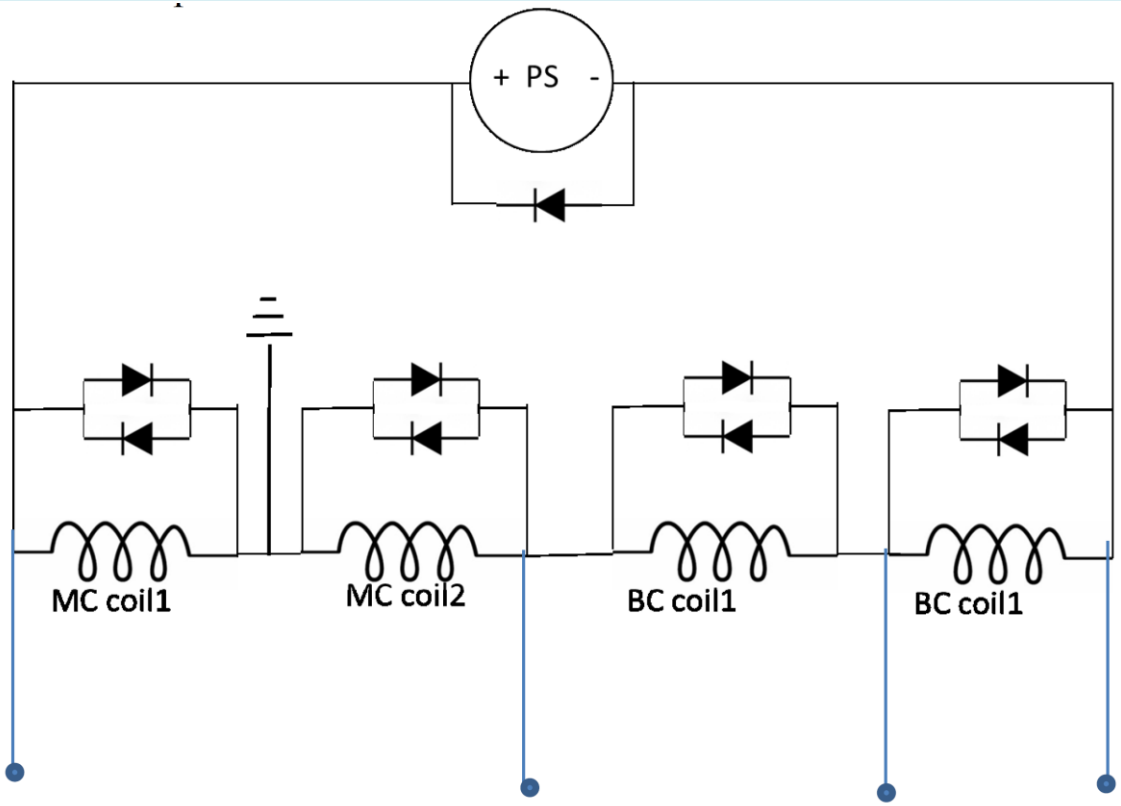

10 back to back diode assemblies available for connection

Present routing assumes diode across each current lead connections (2 for main coil + BC coil connection and 8 for dipole correctors)

Do we need additional diodes ?

Voltage tap shall be provided for ground point as well

Thanks