research instruments

PIP-II 5-cell HB 650 MHz Cavities

Zoom Meeting: “**Manufacturing Readiness Review”**

March 17, 2021

Manufacturing Readiness Review (MRR)

research instruments

Agenda

- RI´s Organisation/Team
- Time Schedule
- Fabrication Plan
- Fabrication Drawings
- Raw Material Review
- Weld plan
- Quality Assurance Plan

© RI Research Instruments GmbH 2021

RI´s Organisation/Team

research instruments

Finance & Controlling
Katrin Sauer & Helmut Schulten

Project Management
Alexander Navitski

Quality Management
Oliver Henk

Project Engineering
Pavel Serbun

Manufacturing Engineering
Marvin Kemmerich & Pavel Serbun

Cavity Design & Fabrication
Stefan Scherer & Christopher Eickhoff

Data Processing & Transfer
Anke Clever & Karolin Hopfer

RF Check & Trimming
Vitali Porshyn

Welding
Victor Carrion

RI´s Project No. 4665

© RI Research Instruments GmbH 2021

Time Schedule

research instruments

	45%	**PIP-II 650 MHz Prototype Cavities**	**46 W**	**09.11.2020**	**24.09.2021**			**0 W**
✓	100%	Award of contract	7 W	07.12.2020	22.01.2021		W;5AA-4 W	0 W
✓	100%	Provision of niobium from FNAL to RI	8 W	25.01.2021	19.03.2021	2		0 W
✓	100%	Define project team	0,5 W	09.11.2020	11.11.2020	2AA-4 W		0 W
✓	100%	Kick-off-Meeting with FNAL	1 W	09.11.2020	13.11.2020	2AA-4 W	+2 W;15;23	0 W
	88%	**Design**	**16 W**	**30.11.2020**	**19.03.2021**			**0 W**
✓	100%	Manufacturing Drawing	8 W	30.11.2020	22.01.2021	5EA+2 W	9	0 W
✓	100%	Design Review with FNAL	5 W	25.01.2021	26.02.2021	8	30;31;32;33	0 W
✓	100%	Adaption of Drawings	1 W	01.03.2021	05.03.2021	9	11	0 W
✓	100%	MS1: Submit final drawings to FNAL	0 W	05.03.2021	05.03.2021	10	12	0 W
	0%	MS2: Approval of Drawings by FNAL	2 W	08.03.2021	19.03.2021	11	26;20	0 W
	78%	**Fabrication Plan**	**18 W**	**16.11.2020**	**19.03.2021**			**0 W**
✓	100%	Preparation of fabrication Plan	14 W	16.11.2020	19.02.2021	5	16	0 W
✓	100%	MS3: Submit Fabrication Plan to FNAL	0 W	19.02.2021	19.02.2021	15	17	0 W
	0%	MS4: Approval of Fabrication Plan by FNAL	4 W	22.02.2021	19.03.2021	16	26	0 W

© RI Research Instruments GmbH 2021

Time Schedule

research instruments

	52%	**Quality Assurance Plan**	**25,55 W**	**16.11.2020**	**12.05.2021**			**19,45 W**
	0%	Welding of EB samples where required	1 W	22.03.2021	26.03.2021	12	21	19,45 W
	0%	Micrograph investigations	2 W	29.03.2021	09.04.2021	20	22	19,45 W
	0%	Preparation of report	4 W	12.04.2021	12.05.2021	21		19,45 W
✓	100%	Preparation of remaining QA Plan	10 W	16.11.2020	22.01.2021	5	24	0 W
✓	100%	MS5: Submit QA plan to FNAL	3 W	25.01.2021	12.02.2021	23	25	0 W
	0%	MS6: Approval of QA Plan by FNAL	5 W	15.02.2021	19.03.2021	24	26	0 W
	0%	MS7: Release of fabrication by FNAL	0 W	19.03.2021	19.03.2021	12;17;25	46	0 W
	30%	**Tooling**	**7 W**	**01.03.2021**	**16.04.2021**			**23 W**
✓	100%	**Design**	**2 W**	**01.03.2021**	**12.03.2021**			**0 W**
✓	100%	Deep-Drawing	2 W	01.03.2021	12.03.2021	9	35	0 W
✓	100%	Bending Tubes	1,5 W	01.03.2021	10.03.2021	9	36	0 W
✓	100%	Turning	1,5 W	01.03.2021	10.03.2021	9	37	0 W
✓	100%	EB-Welding	1,5 W	01.03.2021	10.03.2021	9	38	0 W
	0%	**Manufacturing/Adaptation**	**5,5 W**	**10.03.2021**	**16.04.2021**			**23 W**
	0%	Deep-Drawing	5 W	15.03.2021	16.04.2021	30	40;41	2 W
	0%	Bending Tubes	2 W	10.03.2021	24.03.2021	31		26,5 W
	0%	Turning	4 W	10.03.2021	07.04.2021	32		24,5 W
	0%	EB-Welding	4 W	10.03.2021	07.04.2021	33		24,5 W

© RI Research Instruments GmbH 2021

Time Schedule

research instruments

0%	**Deep-Drawing tests**	**3 W**	**19.04.2021**	**07.05.2021**	**35**		**2 W**
0%	Deepdrawing first Niobium half-cells	1 W	19.04.2021	23.04.2021	35	42	2 W
0%	MS8: 3D CMM and provide data to FNAL	1 W	26.04.2021	30.04.2021	41	43	2 W
0%	MS9: Aproval of forming by FNAL	1 W	03.05.2021	07.05.2021	42	47	2 W
0%	**Manufacturing cavities**	**27 W**	**22.03.2021**	**24.09.2021**			**0 W**
0%	Manufacturing Single Parts	10 W	22.03.2021	28.05.2021	26	49	0 W
0%	Manufacturing half-cells	5 W	10.05.2021	11.06.2021	43	48	2 W
0%	Manufacturing dumbbells	4 W	14.06.2021	09.07.2021	47	50	2 W
0%	Manufacturing endgroups	8 W	31.05.2021	23.07.2021	46	50	0 W
0%	1st 650 MHz Cavity Assy	5 W	26.07.2021	27.08.2021	49;48	51AA+2 W	0 W
0%	2nd 650 MHz Cavity Assy	5 W	09.08.2021	10.09.2021	50AA+2 W	52AA+2 W	0 W
0%	3rd 650 MHz Cavity Assy	5 W	23.08.2021	24.09.2021	51AA+2 W	54	0 W
0%	MS10: Cavity fabrication finished	0 W	24.09.2021	24.09.2021	52		0 W

© RI Research Instruments GmbH 2021

Fabrication Plan

research instruments

Manufacturing and inspection plan: 4665_PIP-II 650 MHz ß=0.92 Bare 3 Cavities for Fermilab (FNAL)

	Activity	View/Article	Due date for article	Progress	Serial number	Quantity needed	Quantity finished	Verification by RI Name, Sign & Date	Verification by FNAL Name, Sign & Date	Records	Remarks
1.	**Material**										
1.1	**Nb sheet; 237 × 121 × 2.5 [mm]; "MC tube";**	99577				**3**					
	Material arrived		15.01.2021	29.01.2021							
	Incomming inspection			04.02.2021				x			Acceptance letter
	Store for following work			04.02.2021							
1.2	**Nb sheet; 380 × 330 × 4.1 [mm]; "Stiffening ring";**	99578				**3**					
	Material arrived		15.01.2021	29.01.2021							
	Incomming inspection			04.02.2021				x			Acceptance letter
	Store for following work			04.02.2021							
1.3	**Nb sheet; 384 × 220 × 4.1 [mm]; "Ext. Tube, MC & FP Ends";**	99581				**2**					
	Material arrived		15.01.2021	29.01.2021							
	Incomming inspection			04.02.2021				x			Acceptance letter
	Store for following work			04.02.2021							
1.4	**Nb sheet; 384 × 325 × 4.1 [mm]; "Beam tube";**	99579				**3**					
1.5	**Nb sheet; 559 × 559 × 4.1 [mm]; "Half cell";**	99559				**33**					
1.6	**Nb55Ti disk; Ø 144 × 25 thick [mm]; "MC and FP flange";**	99561				**3**					
1.7	**Nb55Ti disk; Ø 201 × 25 thick [mm]; "Vacuum flange";**	99564				**6**					
1.8	**Nb rod; Ø 20 × 305 long [mm]; "FP tube";**	99560				**1**					
1.11	**Nb forged ring; Øout 137 × Øin 114 × 19 [mm]; "MC & FP spool";**	99580				**6**					

Fabrication Plan

research instruments

		Manufacturing and inspection plan: 4665_PIP-II 650 MHz ß=0.92 Bare 3 Cavities for Fermilab (FNAL)										
2									Verification by			
3		Activity	View/Article	Due date for article	Progress	Serial number	Quantity needed	Quantity finished	RI	FNAL	Records	Remarks
4									Name, Sign & Date	Name, Sign & Date		
62	2	Procedures										
63												
64	2.1	Manufacturing and Inspection plan (MIP)										
65		Handover of MIP to FNAL			17.12.2020							
66		Verification of MIP by FNAL			waiting							
67		Release of MIP for production by FNAL			waiting							
68												
69	2.2	Welding qualification										
70		Welding plan transmitted to FNAL			17.03.2021							
71		Welding plan accepted by FNAL			in progress							
72		Welding of needed samples			not required							
73		Handover of welding report			Future							
74		Verification of welding report by FNAL			Future							
75		Approval of welding report by FNAL			Future							
76												

© RI Research Instruments GmbH 2021

Fabrication Plan

research instruments

Manufacturing and inspection plan: 4665_PIP-II 650 MHz ß=0.92 Bare 3 Cavities for Fermilab (FNAL)

	Activity	View/Article	Due date for article	Progress	Serial number	Quantity needed	Quantity finished	Verification RI Name, Sign & Date	Verification FNAL Name, Sign & Date	Records	Remarks
3.	**Fabrication PIP-II 650 MHz ß=0.92 Elliptical Cavities**										
3.1	**Single parts for cavity**										
3.1.1	**Flange, Main Couple (MC-port)**	P132470	DD/MM/YYYY			3					
	Waterjet cutting			Future			0				
	Turning			Future			0				
	Milling			Future			0				
	Dimensional control, spot check			Future			0	X			Records only for internal documentation
	US degreasing			Future			0				
3.1.2	**Flange, Field Probe (FP-port)**	P132493	DD/MM/YYYY			3					
	Waterjet cutting			Future			0				
	Turning			Future			0				
	Milling			Future			0				
	Dimensional control, spot check			Future			0	X			Records only for internal documentation
	US degreasing			Future			0				
3.1.3	**Flange, Hex-Seal, Typ-B92**	P132472	DD/MM/YYYY			6					
	Waterjet cutting			Future			0				
	Turning			Future			0				
	Milling			Future			0				
	Dimensional control, spot check			Future			0	X			Records only for internal documentation
	US degreasing			Future			0				
3.1.4	**Iris Dumbell Stiffener - MC Endgroup**	P132478	DD/MM/YYYY			6					
	Waterjet cutting			Future			0				
	Rolling			Future			0				
	Turning incl. Milling			Future			0				
	Dimensional control, spot check			Future			0	X			Records only for internal documentation
	US degreasing			Future			0				

Fabrication Plan

research instruments

Manufacturing and inspection plan: 4665_PIP-II 650 MHz ß=0.92 Bare 3 Cavities for Fermilab (FNAL)

	Activity	View/Article	Due date for article	Progress	Serial number	Quantity needed	Quantity finished	Verification by RI Name, Sign & Date	Verification by FNAL Name, Sign & Date	Records	Remarks
269	**Dumbbells**										
270											
271	**Normal Half Cell, Male**	P132480	DD/MM/YYYY			12					
272	Turning			Future			0				
273	Dimensional control, spot check			Future			0	X			Records only for internal documentation
274	Height measurement for RF			Future			0	X	X	DC_NHC_02	Records to be transmitted to FNAL for release
275	US degreasing			Future			0				
276	RF control			Future			0	X	X	FC_NHC_01	Records to be transmitted to FNAL for release
277	US degreasing			Future			0				
278											
279	**Normal Half Cell, Female**	P132482	DD/MM/YYYY			12					
280	Turning			Future			0				
281	Dimensional control, spot check			Future			0	X			Records only for internal documentation
282	Height measurement for RF			Future			0	X	X	DC_NHC_02	Records to be transmitted to FNAL for release
283	US degreasing			Future			0				
284	RF control			Future			0	X	X	FC_NHC_01	Records to be transmitted to FNAL for release
285	US degreasing			Future			0				
286											
287	**Dumbbell w/o Stiffening Rings**	P132802	DD/MM/YYYY			12					
288	Etching 20 µm for EB welding	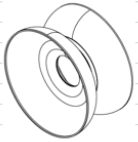		Future			0				
289	US degreasing			Future			0				
290	Assembly for welding			Future			0				
291	EB welding of iris within 24 h after etching (EB in UHV)			Future			0				
292	Visual control of welding seam			Future			0				
293											
294	**Dumbell Assembly with Stiffening Rings**	P132479	DD/MM/YYYY			12					
295	5 µm etching of dubbell and 20 µm stiffening ring			Future			0				
296	US degreasing			Future			0				
297	Assembly for welding			Future			0				
298	EB welding of stiffening rings within 24 h after etching (EB in UHV)			Future			0				
299	Visual control of welding seam			Future			0				

Fabrication Plan

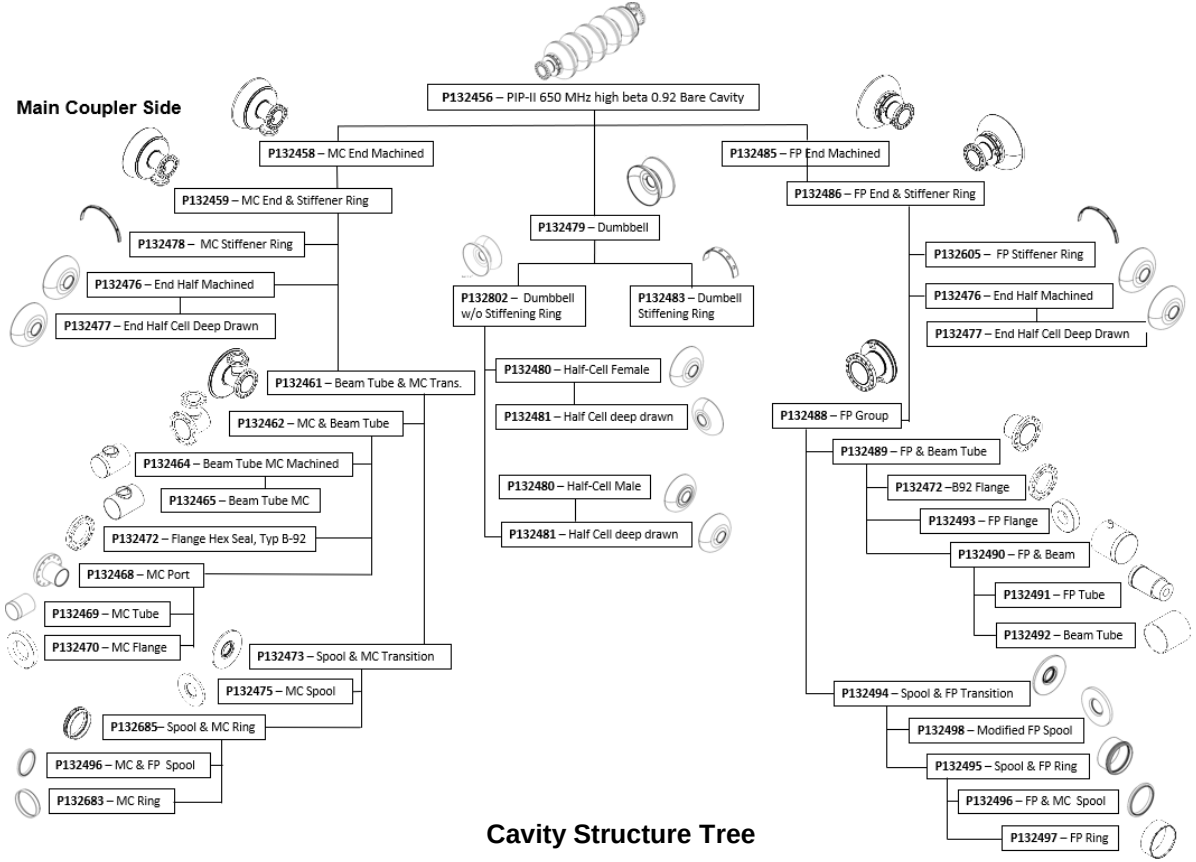

Cavity Structure Tree

Fabrication Drawings

- Flats on Flanges

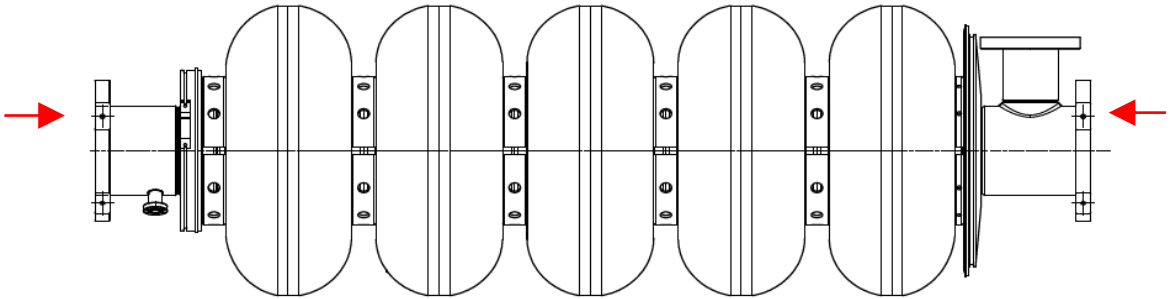

- Field Probe Tube

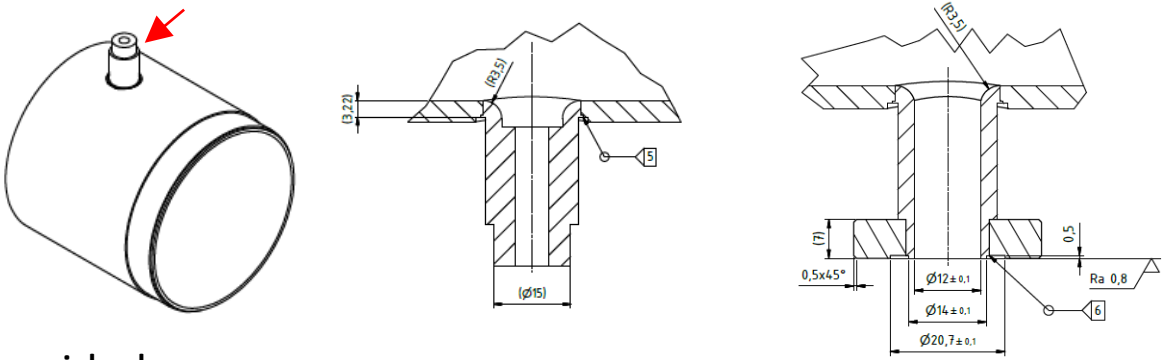

- 3D Model (.step file) was provided
- Drawings were approved by FNAL → official letter needed

© RI Research Instruments GmbH 2021

Raw Material Review

research instruments

Quantity	Dimensions, mm	Weight, kg	Comments	Application	Article	Material Article No.
33	Sheet 560×560×4.1	11.145	Nb	Half Cells	P132-477 P132-481	99-559
3	Sheet 384×325×4.1	4.44	Nb	Beam Tubes	P132-465 P132-492	99-579
2	Sheet 384×220×4.1	3.00	Nb	Ext. Tube, MC & FP Ends	P132-683 P132-497	99-581
3	Sheet 380×330×4.1	4.44	Nb	Stiffening Rings	P132-478 P132-483 P132-486	99-578
3	Sheet 237×121×2.5	0.64	Nb	MC Tube	P132-469	99-577
1	Rod Ø20 ×305	0.85	Nb	FP Tube	P132-491	99-560
3	Disk Ø144 ×25	2.35	$Nb_{55}Ti$	MC/FP Flange	P132-470 P132-493	99-561
6	Disk Ø201 × 25	4.6	$Nb_{55}Ti$	Vacuum Flange Type B-92	P132-472	99-564
3	Ring Ø234× Ø130×34	5.9	$Nb_{55}Ti$	Modified FP Spool	P132-498	99-563
3	Ring Ø358× Ø130×28	14.02	$Nb_{55}Ti$	MC Spool	P132-475	99-562
6	Ring Ø137× Ø114×19	0.77	Nb	MC/FP Spool	P132-496	99-580

- Date received: 29.01.2021
- Current status: in RI´s Warehouse
- Acceptance letter was sent: 08. 02. 2021 → please return it signed

© RI Research Instruments GmbH 2021

Weld Plan

research instruments

Naht-Nr.	Artikel-Nr.	Nahtform	Zu verbindende Werkstoffe	Schweiß-verfahren	Nahtprüfung				Bewertung / Criteria EN ISO 13919-1	Schweiß-anweisung	Bemerkungen
Weld No.	Article No.	Type of Weld	Materials to be joined	Weld Process	Weld Test					Welding Specification	Remarks
-		- Skizze / Sketch	-	EN ISO 4063	Art	H	K	SH		-	-
1 2 3	P132497 P132492 P132465	BW 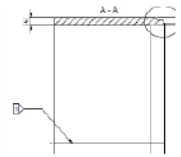	Nb RRR>300	511	VT	X			B	kEB 01-4,0-004 gEB 01-4,0-006	SNK-2 t4,0 mm Ø125,8
4	P132469	BW 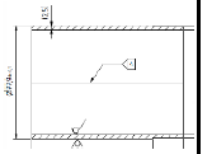	Nb RRR>300	511	VT	X			B	kEB 01-2,5-005 gEB 01-2,6-001	SNK-2 t2,5mm Ø77,9

- Proposed Weld Plan was sent 2021-03-17 (Doc. No. 4665-P123019-SP_A)
- Weld Certification and Qualification (in progress)

Quality Assurance Plan

Official Documents were provided:

- RI´s Quality Assurance (Doc. No. 4665-BP-13338-2)
- A non-conformity report (RI´s Best Practice No. 00011)

© RI Research Instruments GmbH 2021

Summary

- Cavity fabrication finished → September 2021
- Fabrication Plan was developed and provided
- Drawings were approved by FNAL → official letter needed
- Raw Material → received (acceptance letter needed)
- Weld Plan was developed and provided
- Weld Qualification (in progress)
- RI´s Quality Assurance was provided

© RI Research Instruments GmbH 2021

research instruments

Thank you for your attention!