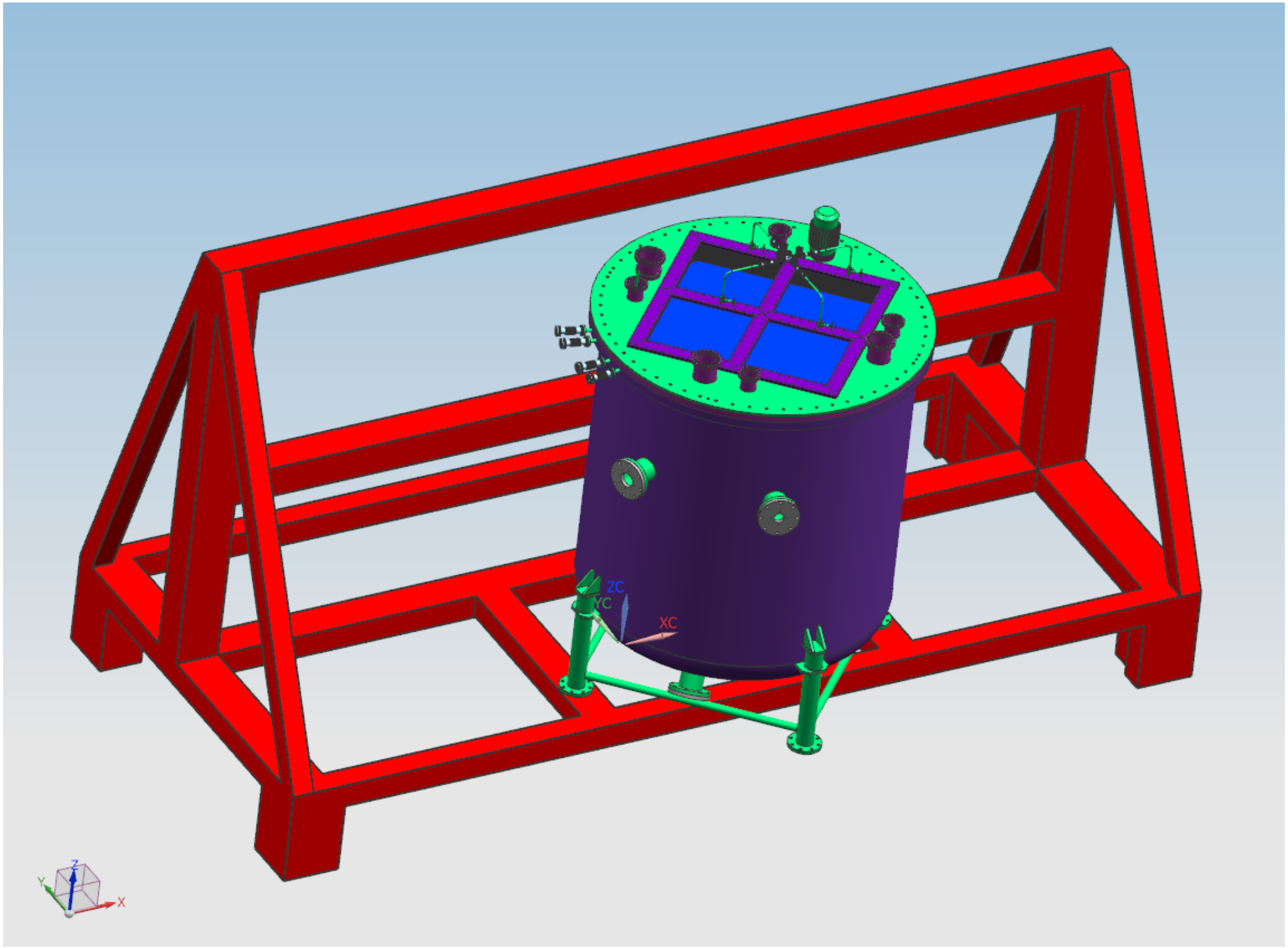
ZC
YC
XC
Z
Y
X

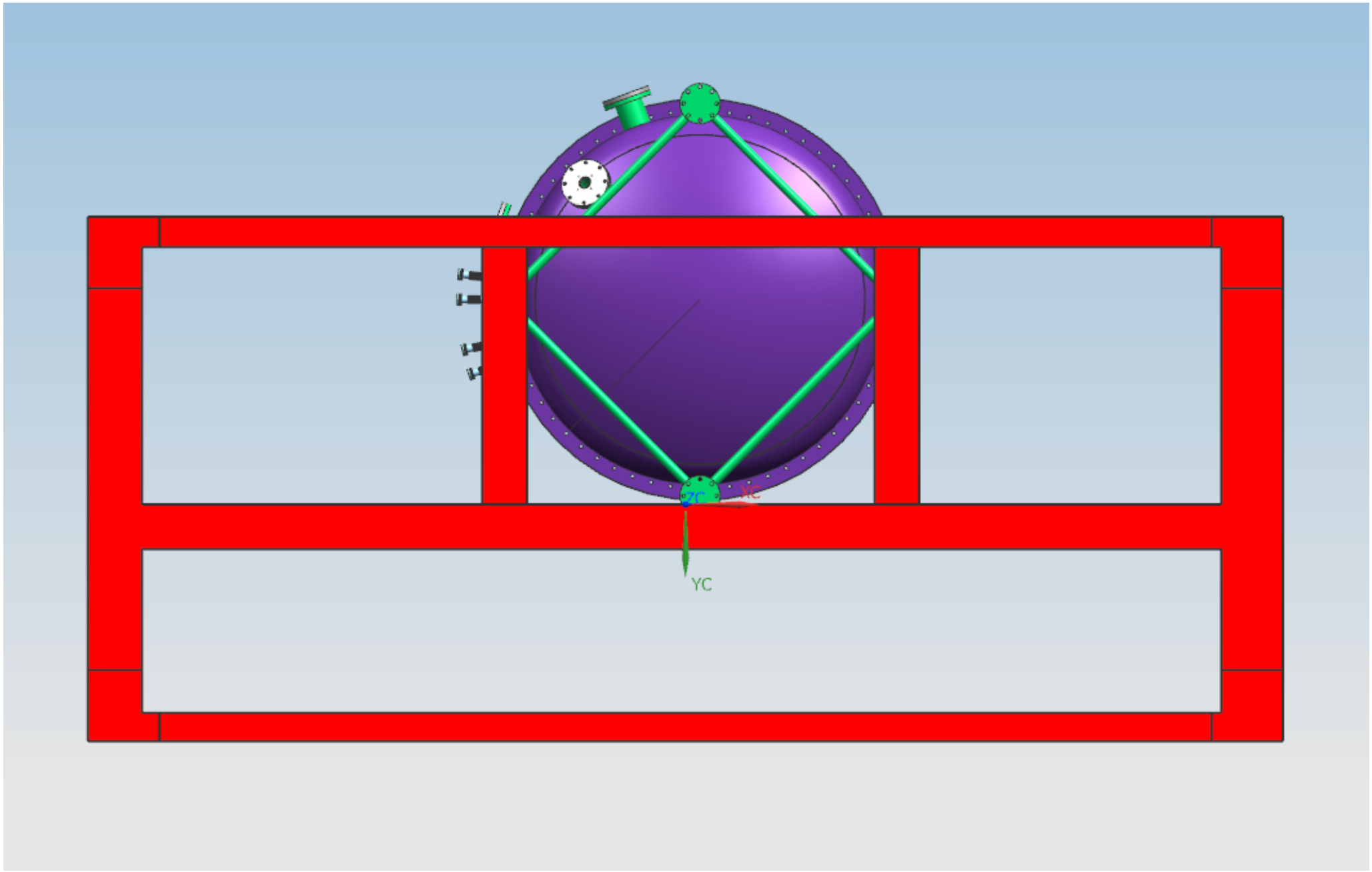
ZC
XC
YC

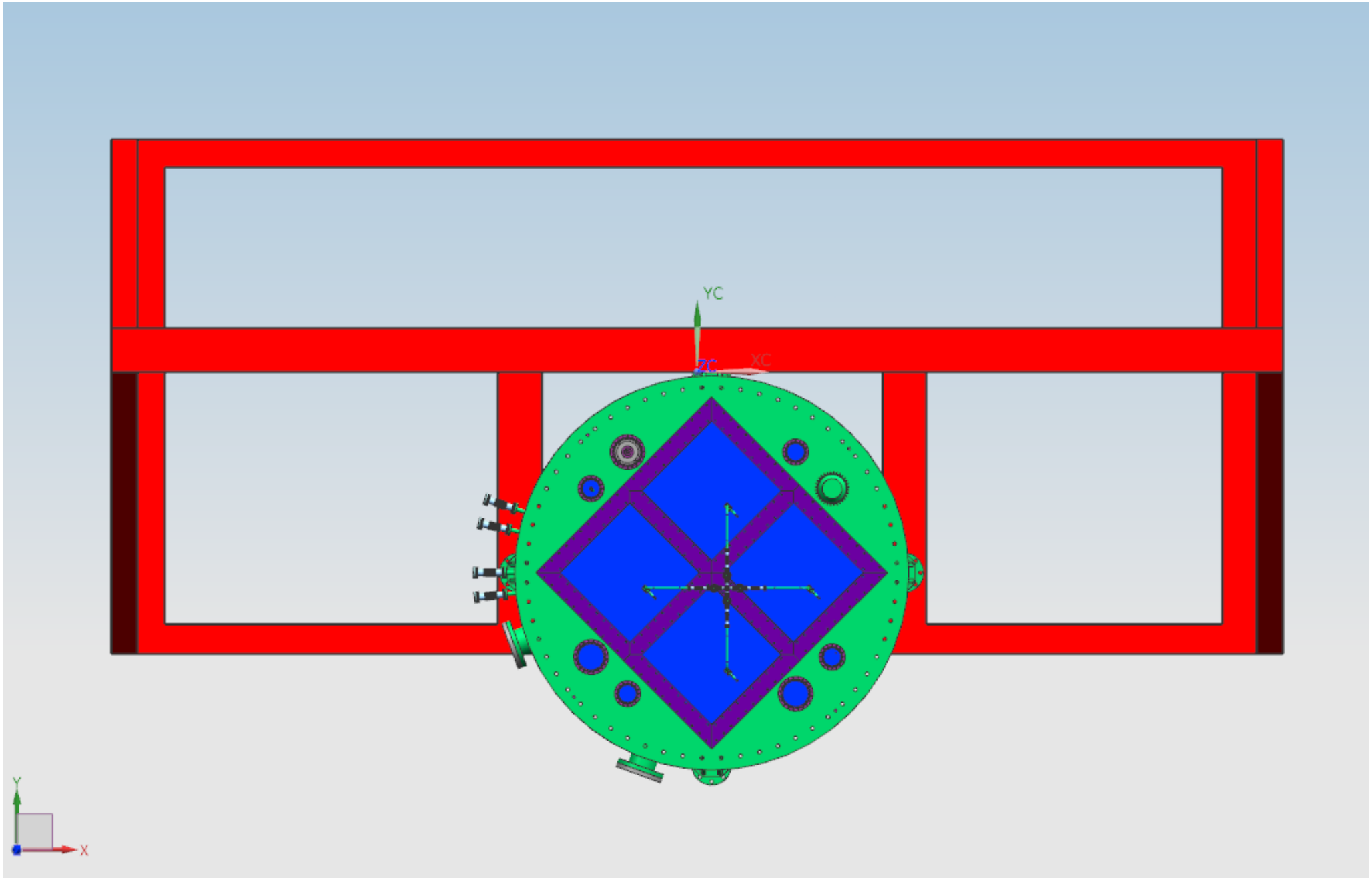
YC
XC
ZC
Y
X

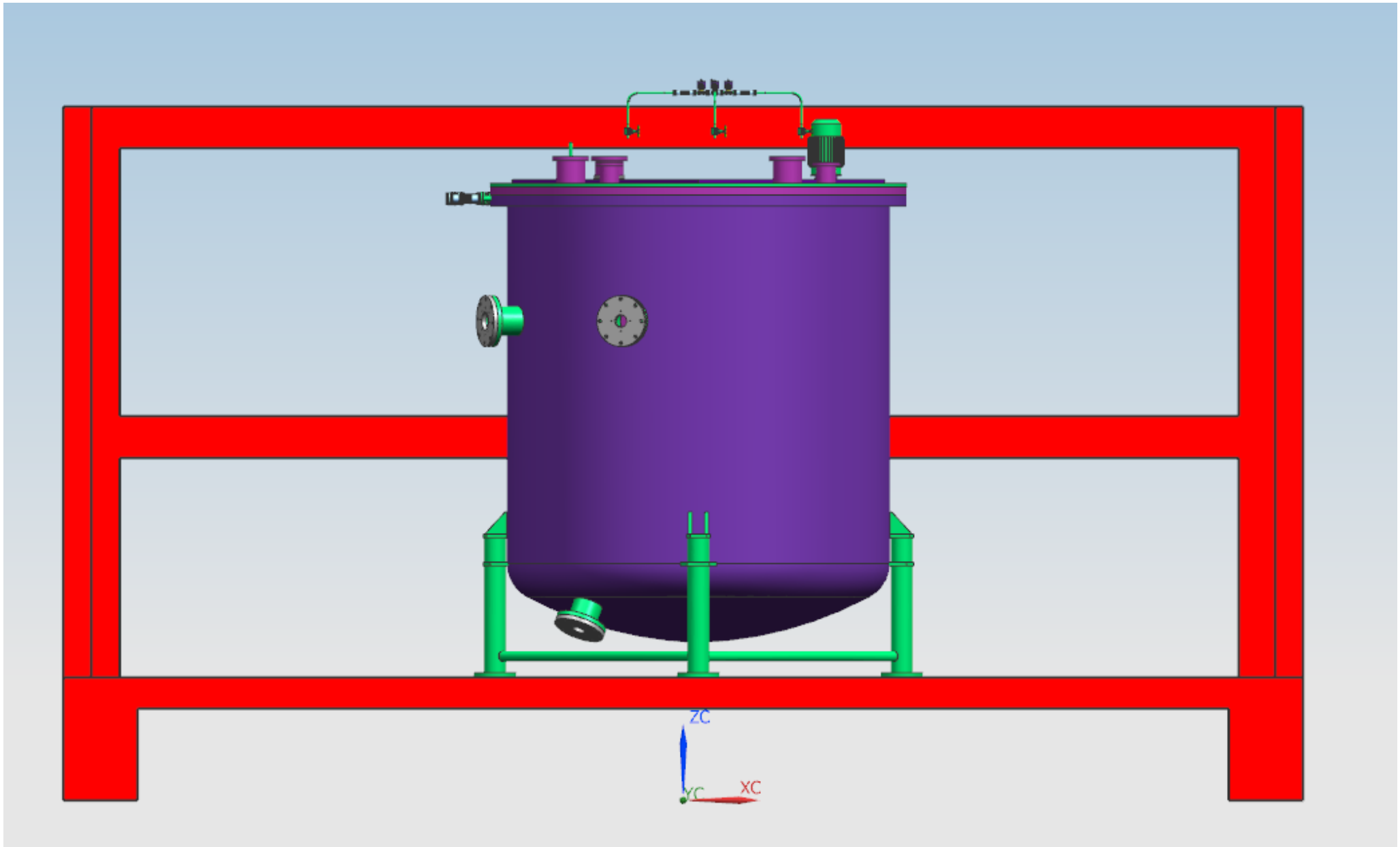
ZC
YC
XC

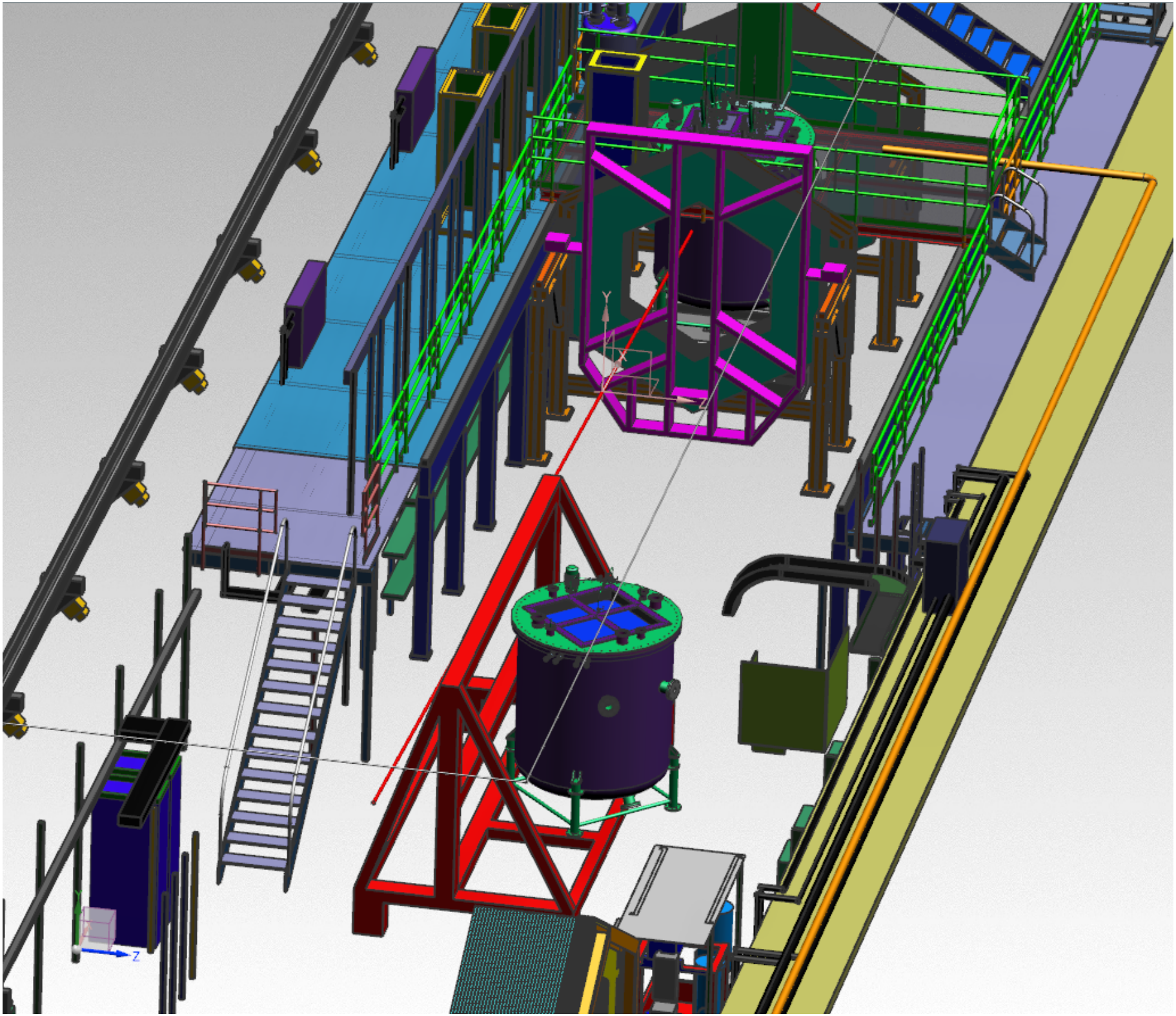

DESCRIPTION: MINERVA CART FOR ARGON CUBE 2X2 TANK

PROJECT: Mech-BeamlineEquipment

CATEGORY: 0

REV	REVISION CONTROL DOCUMENT	DATES	SIGNATURES	
-	F10153255---RCD		DRAWN	
			APPROVED	

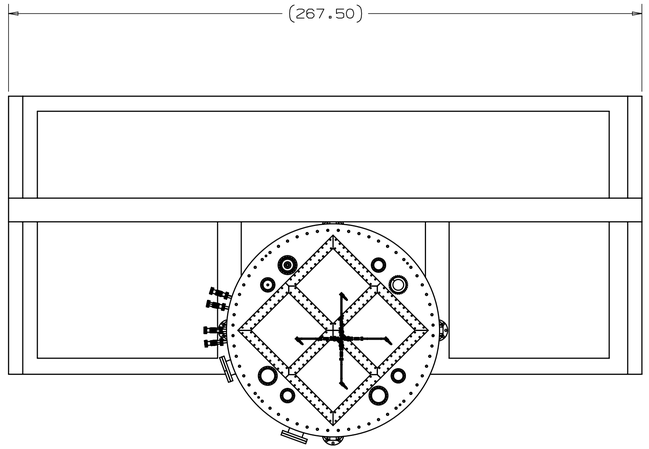

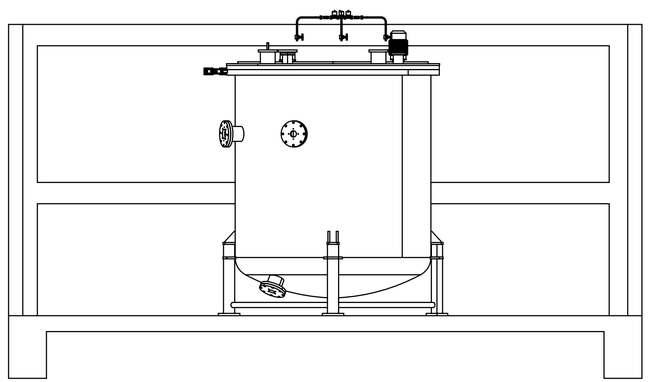

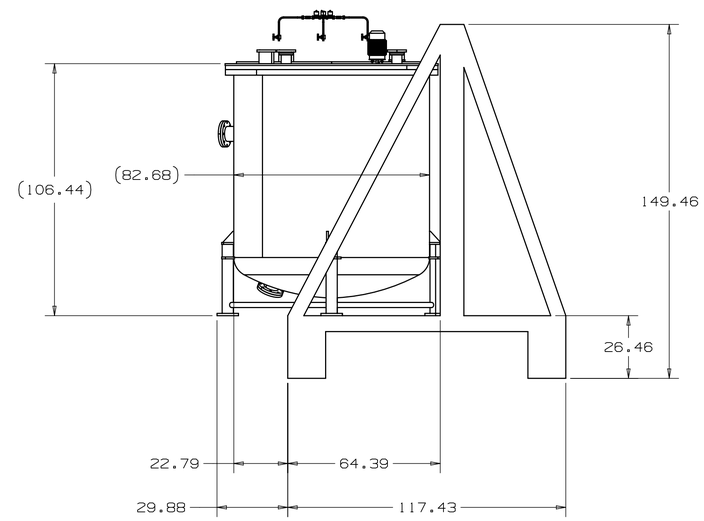

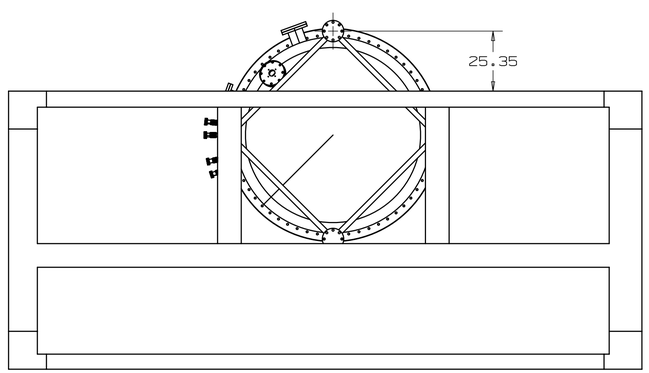

UNLESS OTHERWISE SPECIFIED				
±.X	±.XX	±.XXX	±X/X	±X°
.1	.02	.005	1/16	1°

BREAK ALL SHARP EDGES, MAX: .015
DO NOT SCALE DRAWING
DIMENSIONS BASED ON: ASME Y14.5-2009
MAX MACHINE ALL SURFACES: 125√
DRAWING UNITS: INCHES

THIRD ANGLE PROJECTION

DRAWN	G.SMITH	DATE	15-Mar-2021
CHECKED		DATE	
APPROVED		DATE	
USED ON			
MATERIAL			
GROUP: Particle Physics Mechanical Support		CAGE CODE: 0U5R6	

FERMI NATIONAL ACCELERATOR LABORATORY
UNITED STATES DEPARTMENT OF ENERGY

NAME: MINERVA CART FOR ARGON CUBE 2X2 TANK

SCALE	SIZE	DRAWING NUMBER	SHEET	REV
1:32	D	F10153255	1 OF 1	-

TEMPLATE VERSION: 2018.12.03