SLAC HOM Prototype Chassis and ML Training Results

Jorge Diaz, John Sikora & Bryce Jacobson

October 27, 2021

SLAC Collaborators: Bryce Jacobson (Co-PI), Feng Zhou, John Sikora, Jorge Diaz Cruz, Auralee Edelen

FNAL Collaborators: Alex Lumpkin (Co-PI), Chip Edstrom, Jinhao Ruan, Peter Prieto, Randy Thurman-Keup

Outline

- Motivation
- LCLS-II HOM Measurement Filter Chassis
- Experiments
- HOM and BPM data
- Machine Learning (ML) training results
- Summary

Motivation: SLAC concern for LCLs-II injector

- LCLS-II cryomodules:
  - Only 1 BPM located at the downstream end
  - No information on low-energy cavity steering, most critical
- Issues with HOM wakefields excited by off-axis bunches in SRF Tesla cavities
  - Long-range wakefields (LRW) – bunch train oscillations
  - Short-range wakefields (SRW) – head/tail emittance dilution
  - Especially for low energy injection (750 keV)
- Excitation detected through HOM damping antennas, 2 per cavity, upstream (US) and downstream (DS)
  - Minimized signals corresponds to best trajectory through cavity and may help to mitigate emittance dilution effects and to preserve emittance
- **Goals**
  - **Instrument LCLS-II injector cavities with HOM beam offset monitors for commissioning (human operators) and FEL optimization (feedbacks, machine learning, fault prediction)**
  - **Obtain a data base for training a Machine Learning (ML) application for minimization of HOM dipolar signals for the LCLS-II injector and linac.**

HOM Signals at SLAC

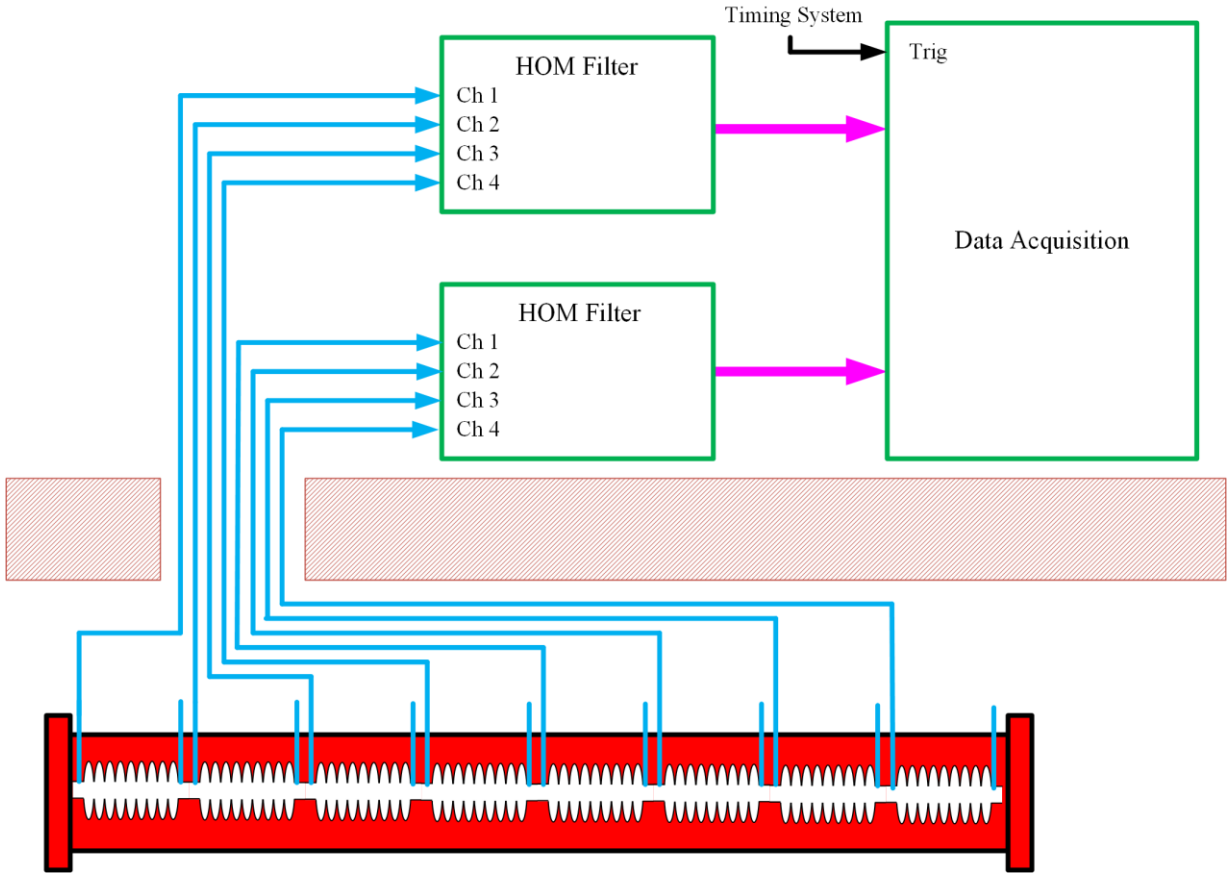

- Concept for the application of HOM measurements at LCLS-II (SLAC)

HOM Measurement Chassis: SLAC Prototype Design

- SLAC requirements for a beam offset monitor:
  - LCLS-II maximum bunch frequency is 1 MHz, initially << 1 MHz
  - LCLS-II maximum bunch charge 300 pC, initially expect minimum of 10 pC.
  - So single bunch, 10 pC/b beam at FAST would be used to check that the SLAC hardware meets the design specifications for LCLS-II.

- Previous measurements at FAST (Feb. 2020) showed that a 23 dB amplifier gave a useable HOM signal at 100 pC/b single bunch.
- The prototype SLAC chassis has 4 channels. Each channel has:
  - 1300 MHz Notch Filter
  - 1750 MHz Band-pass Filter
  - One 31 dB digital step attenuator. 0.5 dB steps
  - **Two** cascaded 23 dB amplifiers to allow measurements down to **10 pC**. Amplifiers have enable/disable control.
  - **The SLAC Chassis are based on the Fermilab HOM Box (Peter Prieto).**

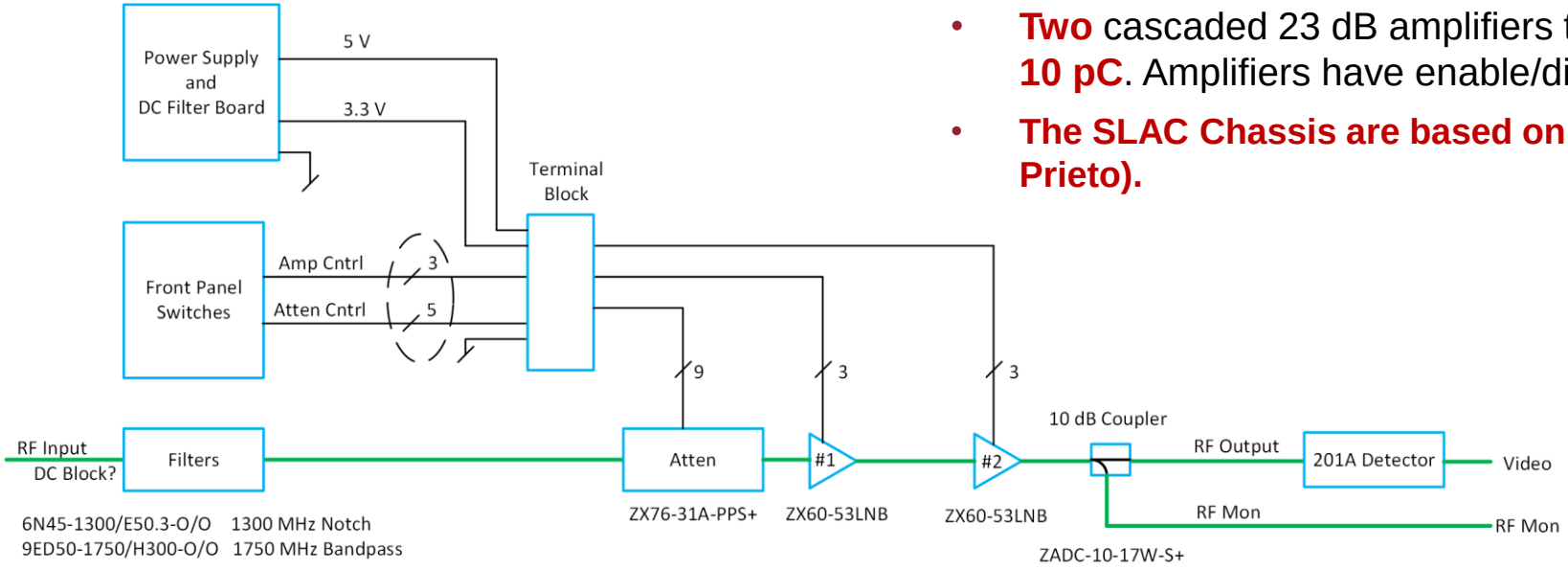

HOM Measurement Chassis

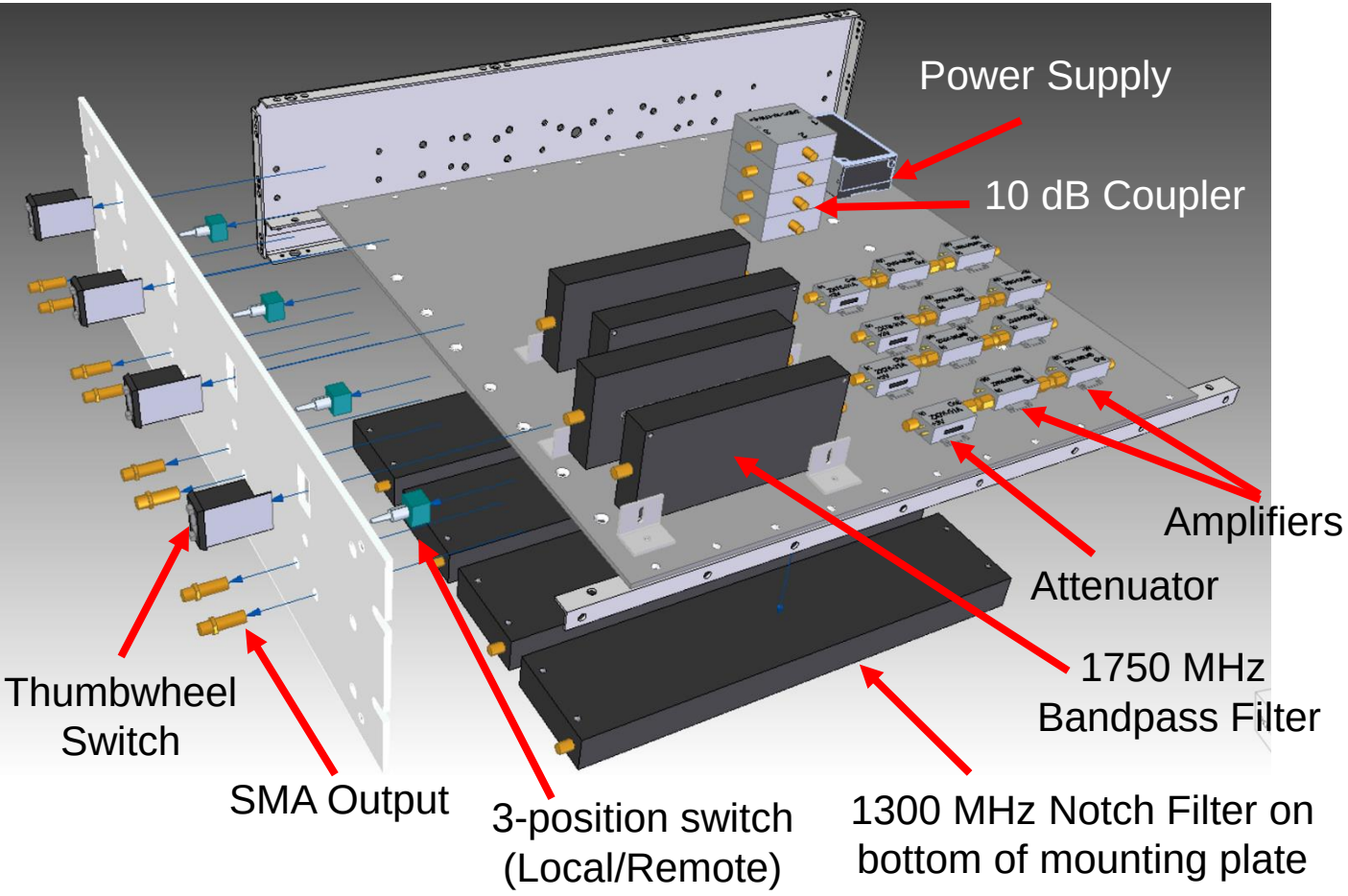

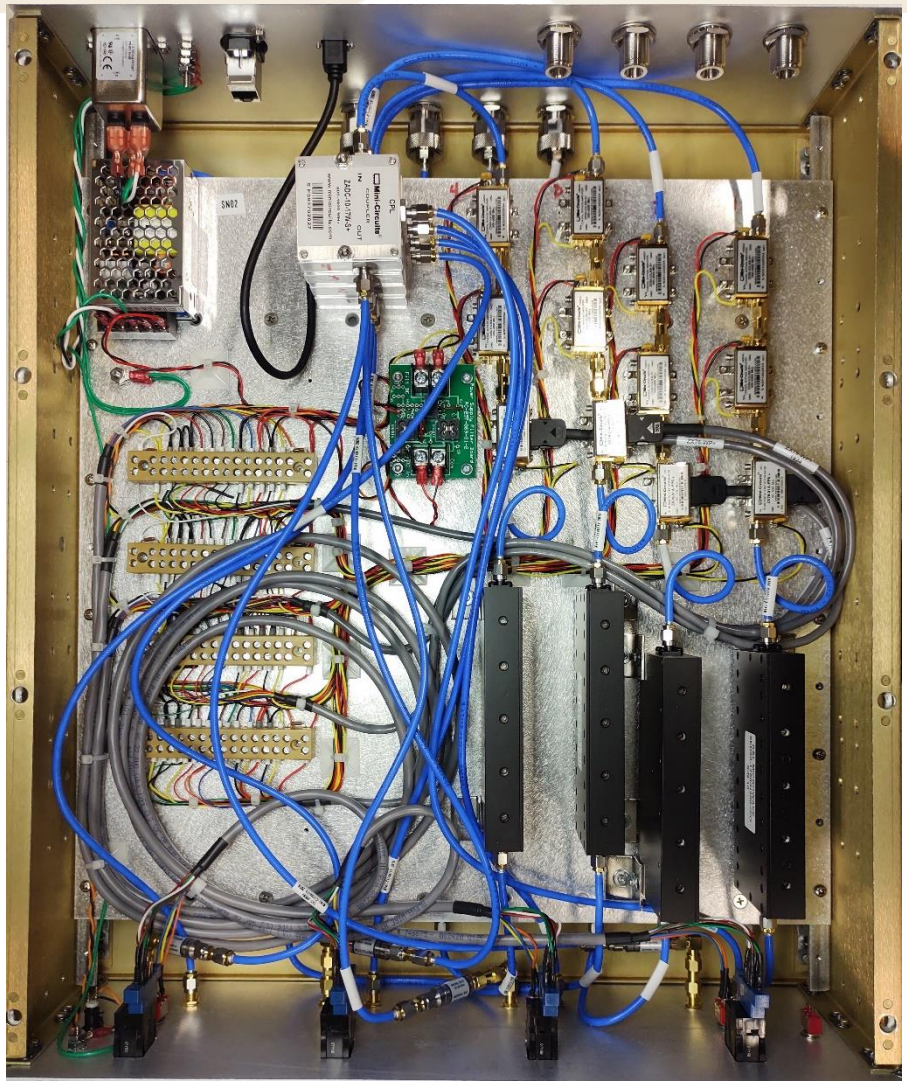

Cryomodule HOM Measurements: Roughly Minimized

- SLAC Detectors with a 10 pC single bunch after reducing Upstream HOMs
- Using 2 Cascaded Amplifiers (+46 dB)

As Found

After Reducing Upstream HOMs

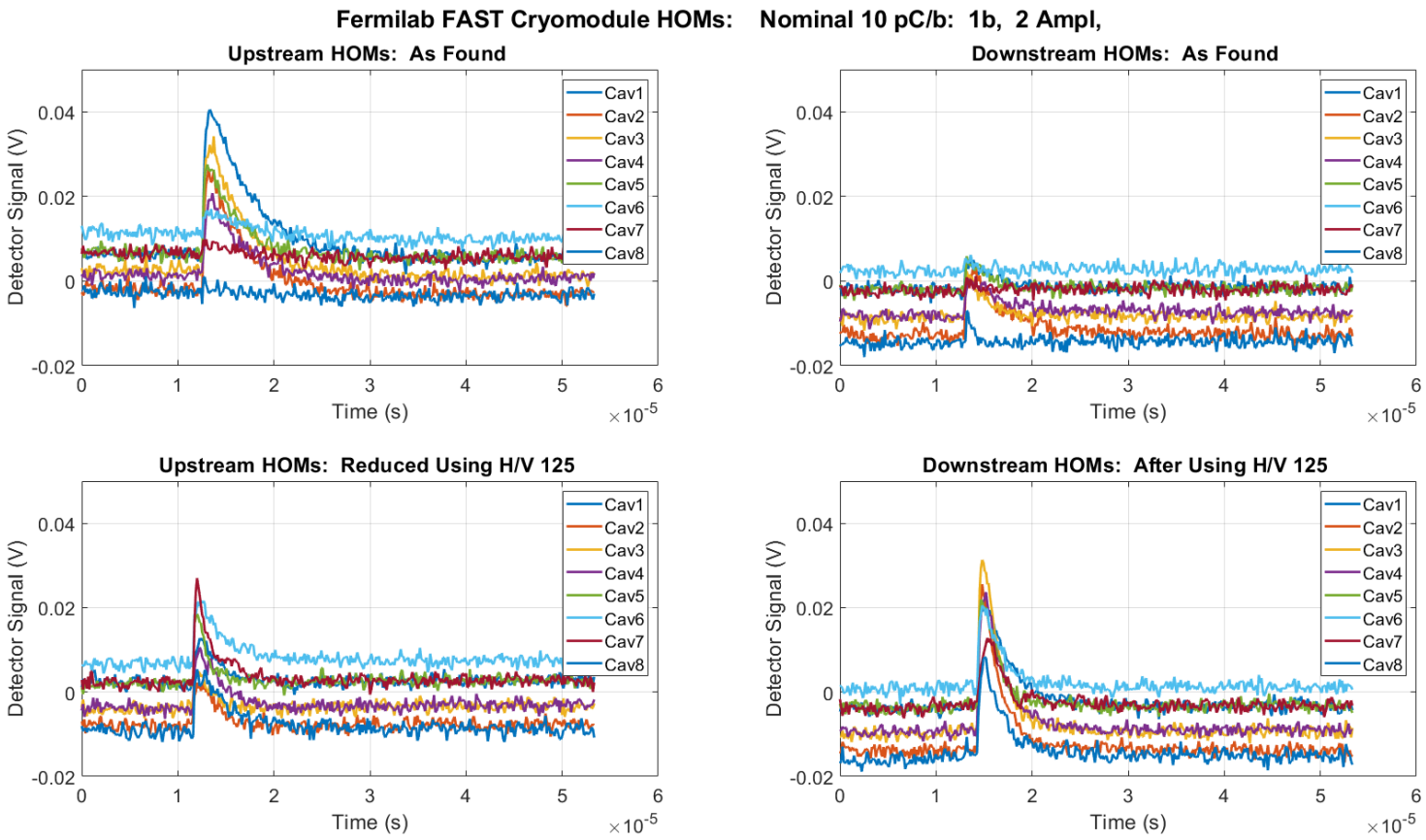

Comparison of Signals with FNAL and SLAC Prototypes

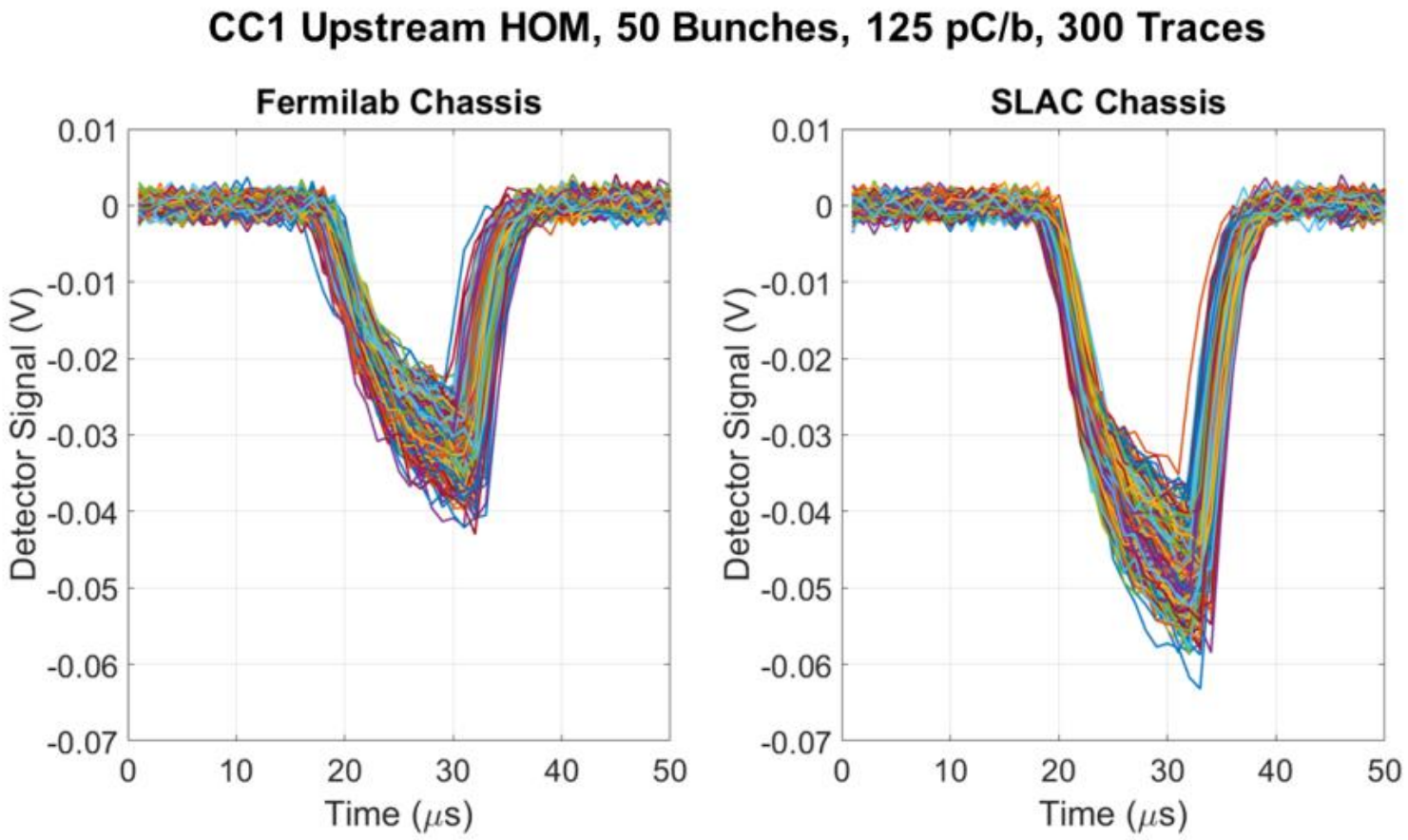

The FNAL and SLAC prototypes give a similar response to HOMs from CC1

The Experiment

- The Beam
  - Electron beam of 50 bunches and 3 MHz bunch repetition rate
  - Bunch pattern repeats at 1 Hz
  - Each repetition is called a “shot”
  - 300 “shots” used at lower charges

- Steps of the experiment
  1. A "reference" trajectory was found by minimizing as many US HOM signals as possible by steering the beam.
  2. We captured HOM and BPM data for this reference trajectory and for charges of 100 and 200 pC/b.
  3. We then repeat the previous measurements for values of the corrector currents of -1 A to 1 A from the reference current, with 0.5 A steps.

HOM data

- Left: Upstream HOM waveforms for 8 cavities
  - Peak value as representative number
- Right: Average HOM peak value over 300 shots vs V125 corrector current offset at 400pC/b

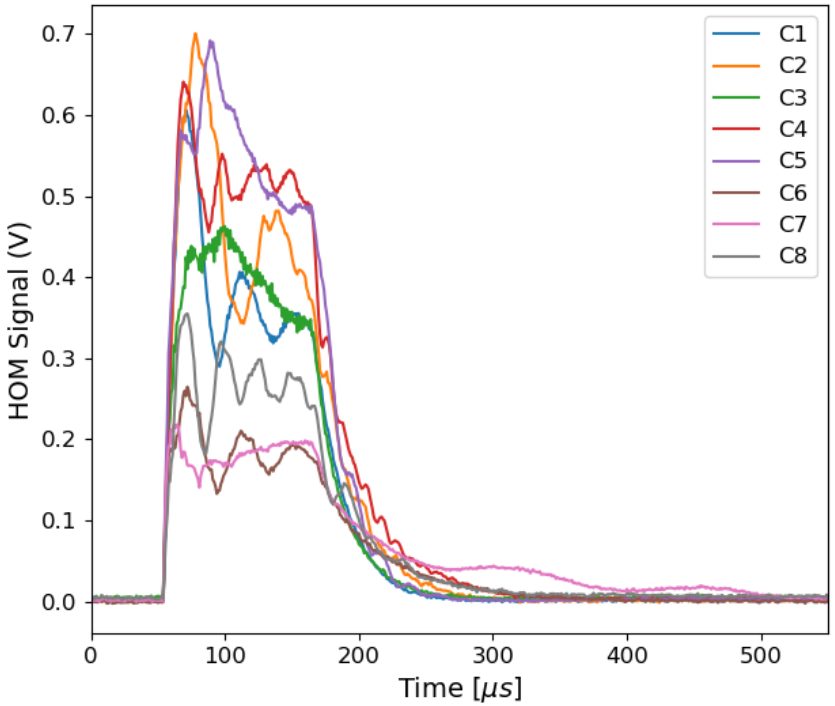

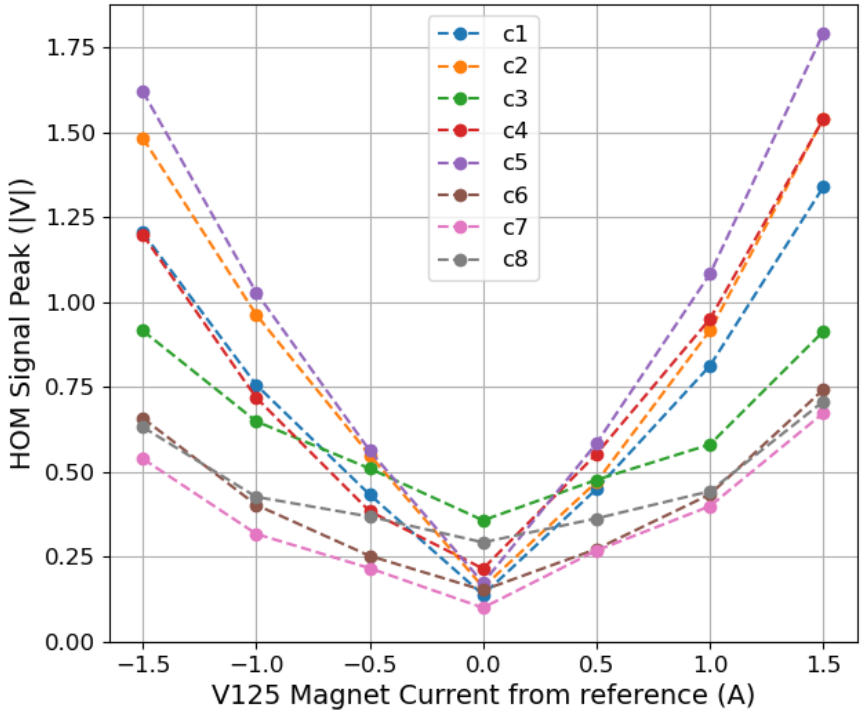

BPM data

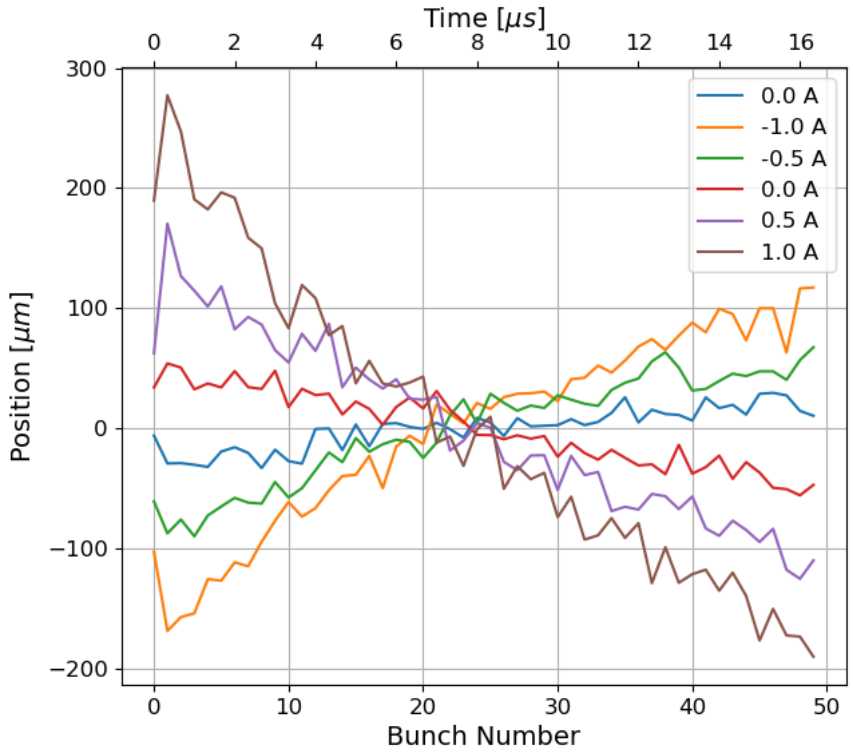

- Evolution of relative beam centroid position at B441PV
  - Centroid position's standard deviation as representative number
  - BPV441 located ~1.2 m downstream of CM2
- Scan over V125 corrector current offset
- Centroid slew proportional to beam offset

Both HOMs and centroid slew are proportional to beam offset

Neural Network (NN) Model

Goal: Train a NN to predict the centroid motion's standard deviation using the HOMs peaks

- Inputs: HOM peaks of all 8 cavities for upstream and downstream couplers
- Output: BPM centroid motion's standard deviation

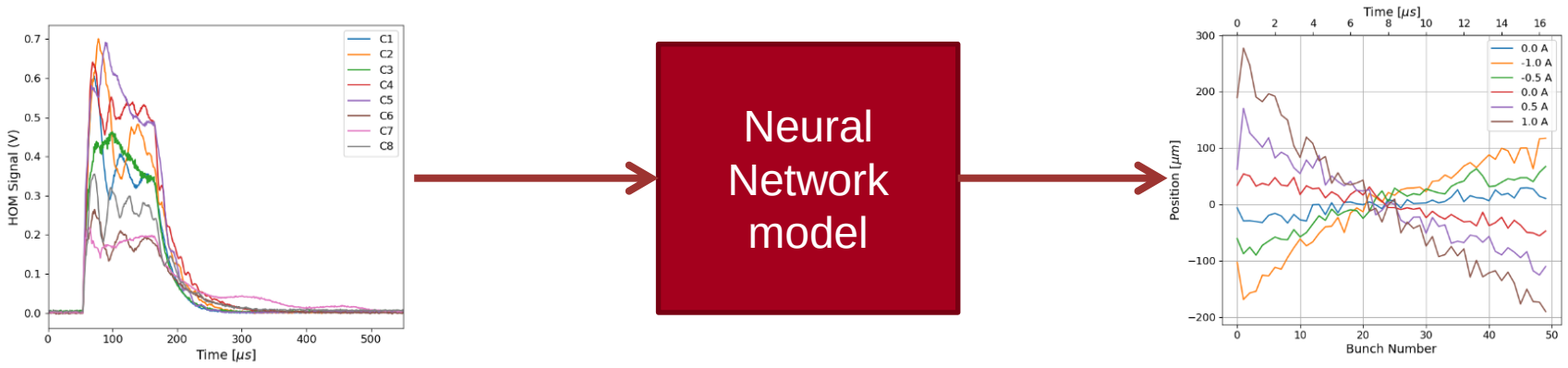

- NN Architecture:
  - Normalization layer
  - 6 hidden layers (four layers of 100 nodes followed by two layers of 64 nodes)
  - Hyperbolic tangent activation function
  - 80-20 split for the training and test datasets.
  - From the training dataset, 20% was used for validation.
  - Early stop was implemented

NN Training Results

BPM	Train MAE	Val MAE	Test MAE	Test MAPE
B440PV	41.42	41.98	42.82	9.76
B440PH	29.82	30.46	30.54	8.2
B441PV	18.98	19.26	19.5	8.4
B441PH	20.89	21.43	21.62	8.44

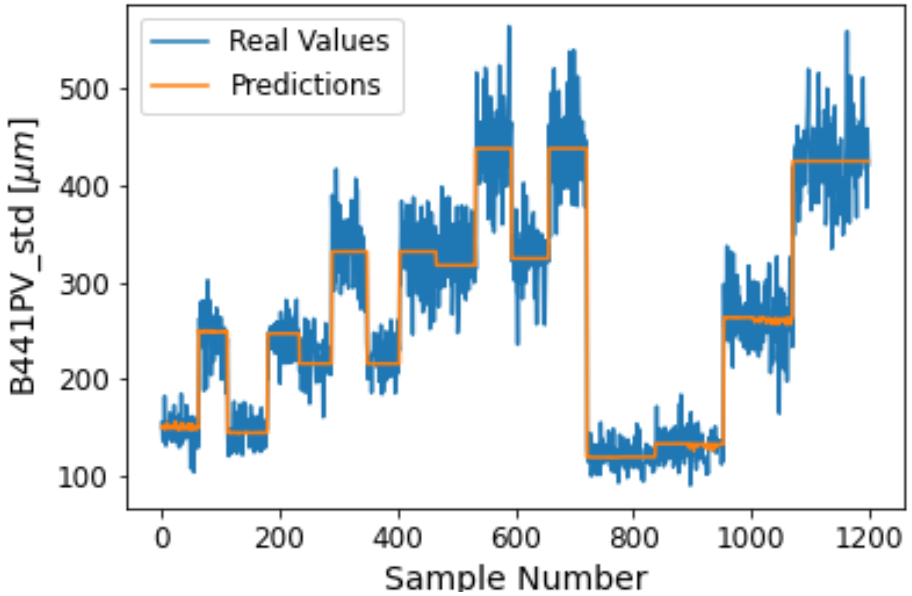

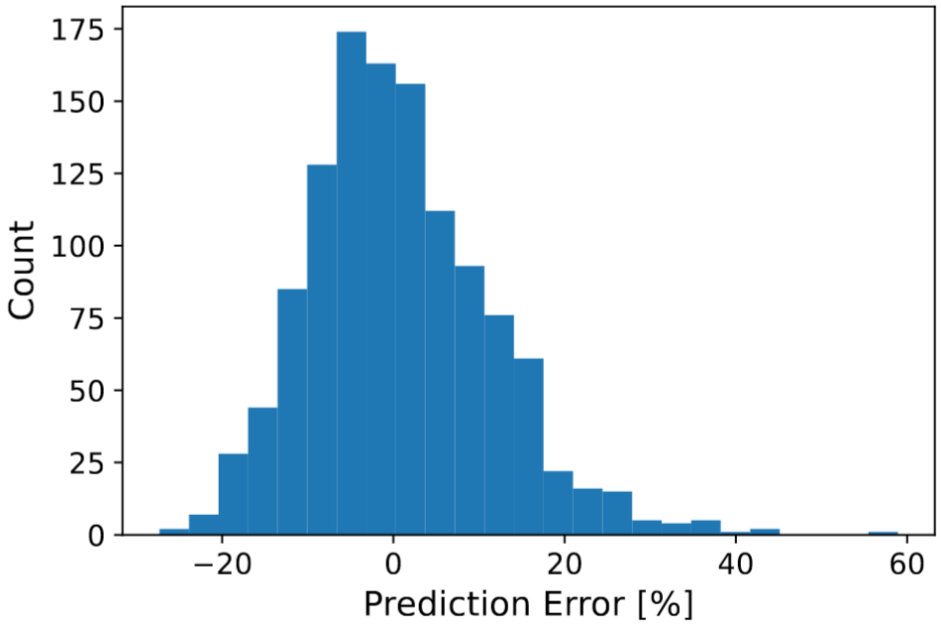

Summary

- The SLAC HOM prototype chassis has been tested with electron beam at Fermilab's FAST facility.
  - With two cascaded amplifiers, data show a usable signal with a single bunch of 10 pC and beam offsets of roughly 1 mm.
  - The FNAL and SLAC prototypes give a similar response to HOMs
- Data with the correlation between beam steering, HOM signals and BPM measurements has been used to train a NN model.
  - The NN model is capable of predicting centroid slew's standard deviation with about 8% accuracy.
  - These are encouraging results towards developing a ML-based controller for HOM reduction and emittance preservation for the LCLS-II project at SLAC.
  - Our next steps include the development of the controller using an inverse model of the NN developed in this research, i.e. a NN that can predict HOM signals for a given beam offset. We also plan to explore adaptive learning, Gaussian Processes (GP) and GP optimizers.
  - Include beam energy at the specific cavity, near-resonances with beam harmonics, and cavity misalignments for the ML training

Thanks!

SLAC LCLS-II Injector

- Sketch of the Injector for the SLAC LCLS-II
- Beam Energy 750 keV at entrance to Cryomodule

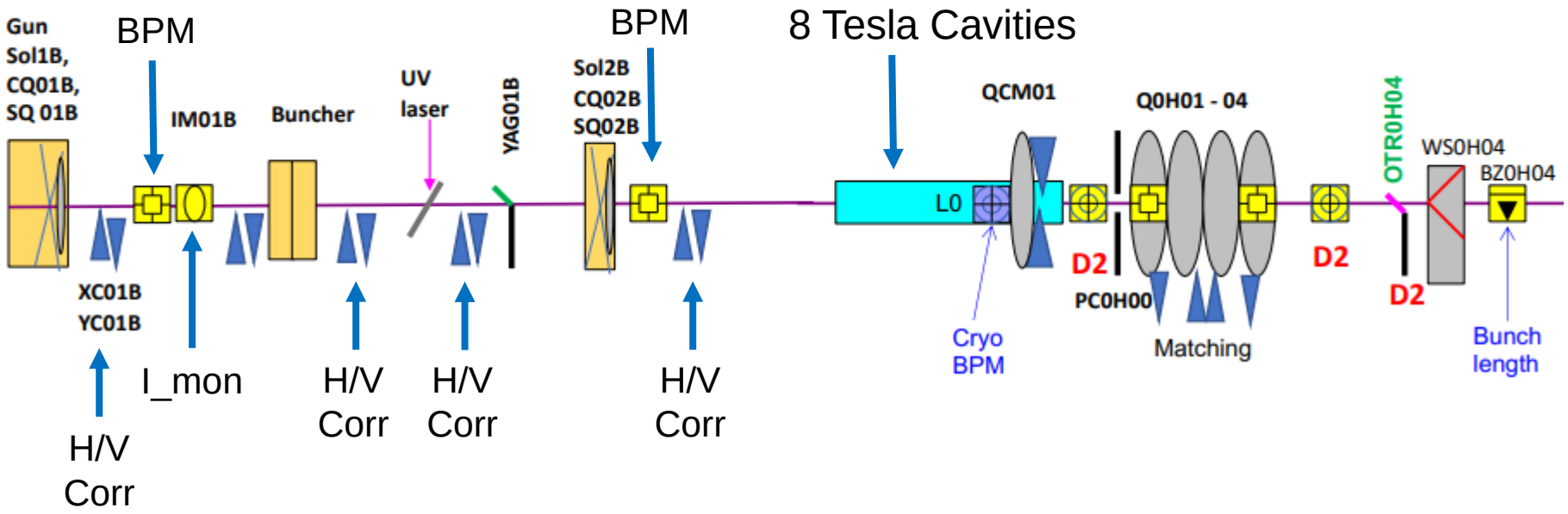

Fermilab's IOTA at the FAST facility

- Initial prototype testing used HOM signals from CC1 & CC2
- Horizontal and Vertical corrector (H/V125) 4m upstream the CM used to steer the beam
- Two 4-channel HOM detectors used to measure HOM signals at the upstream and downstream couplers of the 8 SRF cavities
- 11 BPMs downstream the CM over 80m length

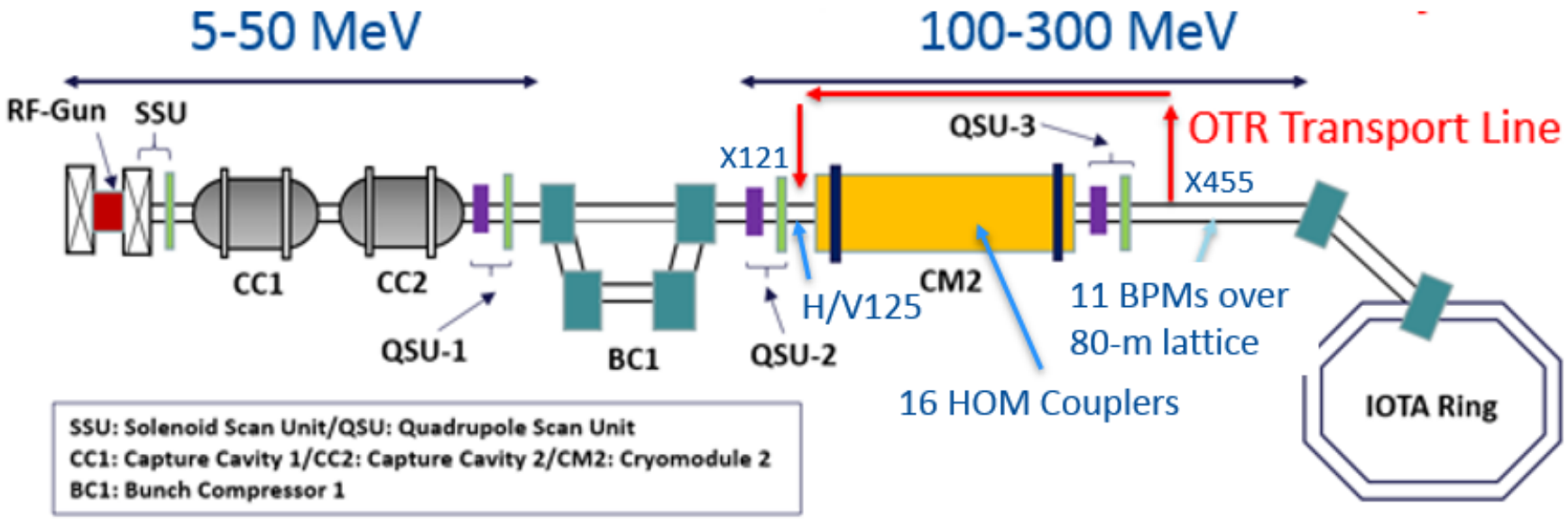

HOM Measurement Chassis