# DEVELOPMENT OF THE ODU/SLAC COMPACT CAVITY DESIGN

**Jean Delayen**
**Subashini De Silva**

**Center for Accelerator Science**
**Old Dominion University**
**and**
**Thomas Jefferson National Accelerator Facility**

# Parallel-Bar Cavity (ODU)

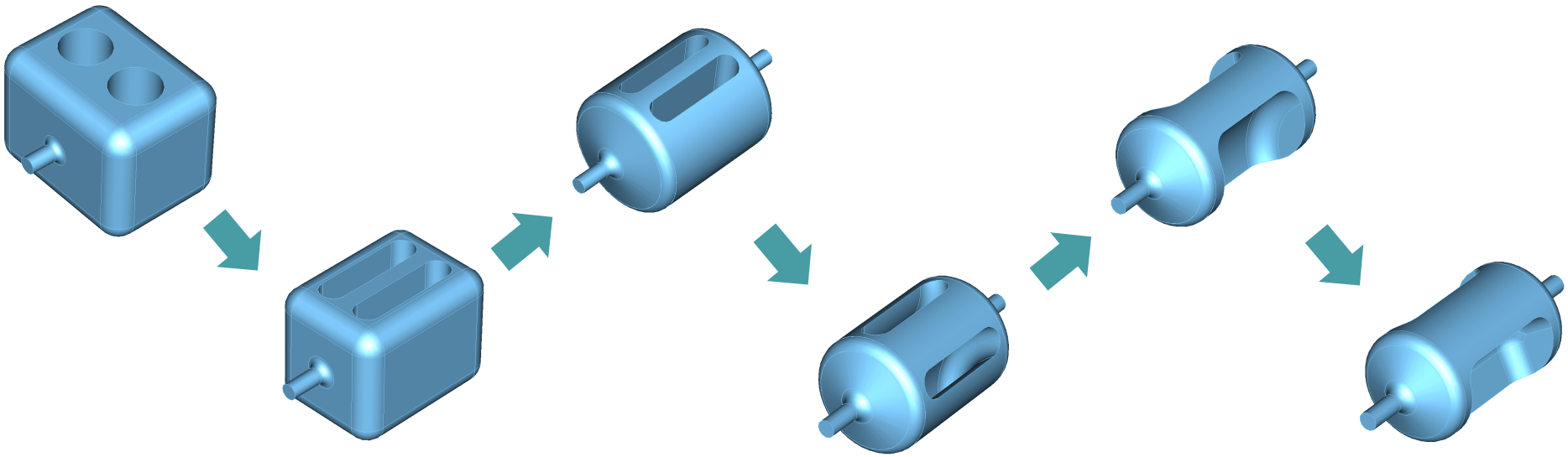

- Aspects of optimization
  - Lower and balanced peak surface fields
  - Stability of the design
    - Cylindrical shape is preferred to reduce flat surfaces
  - Cavity processing
    - Curved end plates for cleaning the cavity
  - Multipacting
  - Wider separation in Higher Order Mode (HOM) spectrum

# Design Evolution – 499 MHz

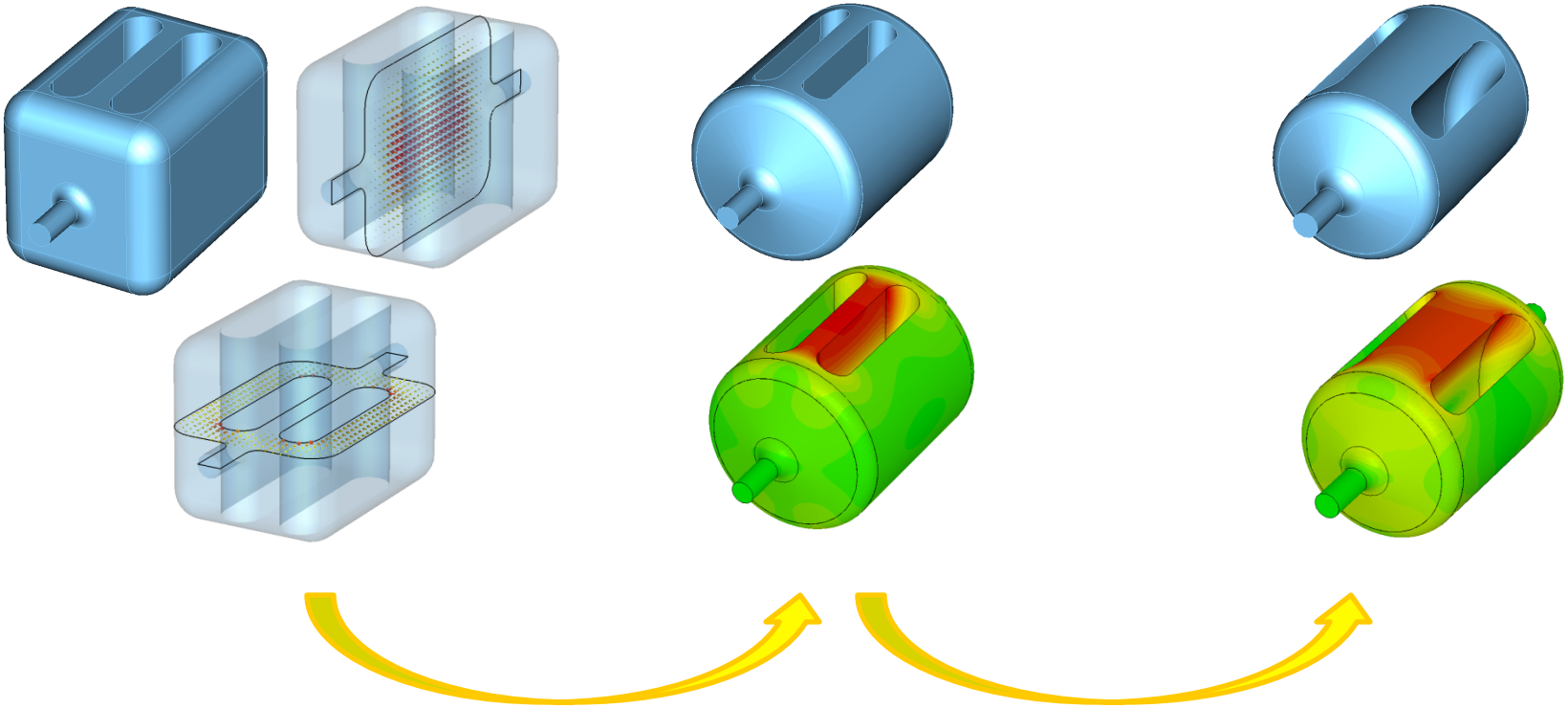

- To increase mode separation between fundamental modes
- ~18 MHz → ~ 130 MHz
- To improve design rigidity → Less susceptible to mechanical vibrations and deformations

- To lower peak magnetic field
- Reduced peak magnetic field by ~20%

# Design Evolution – 499 MHz

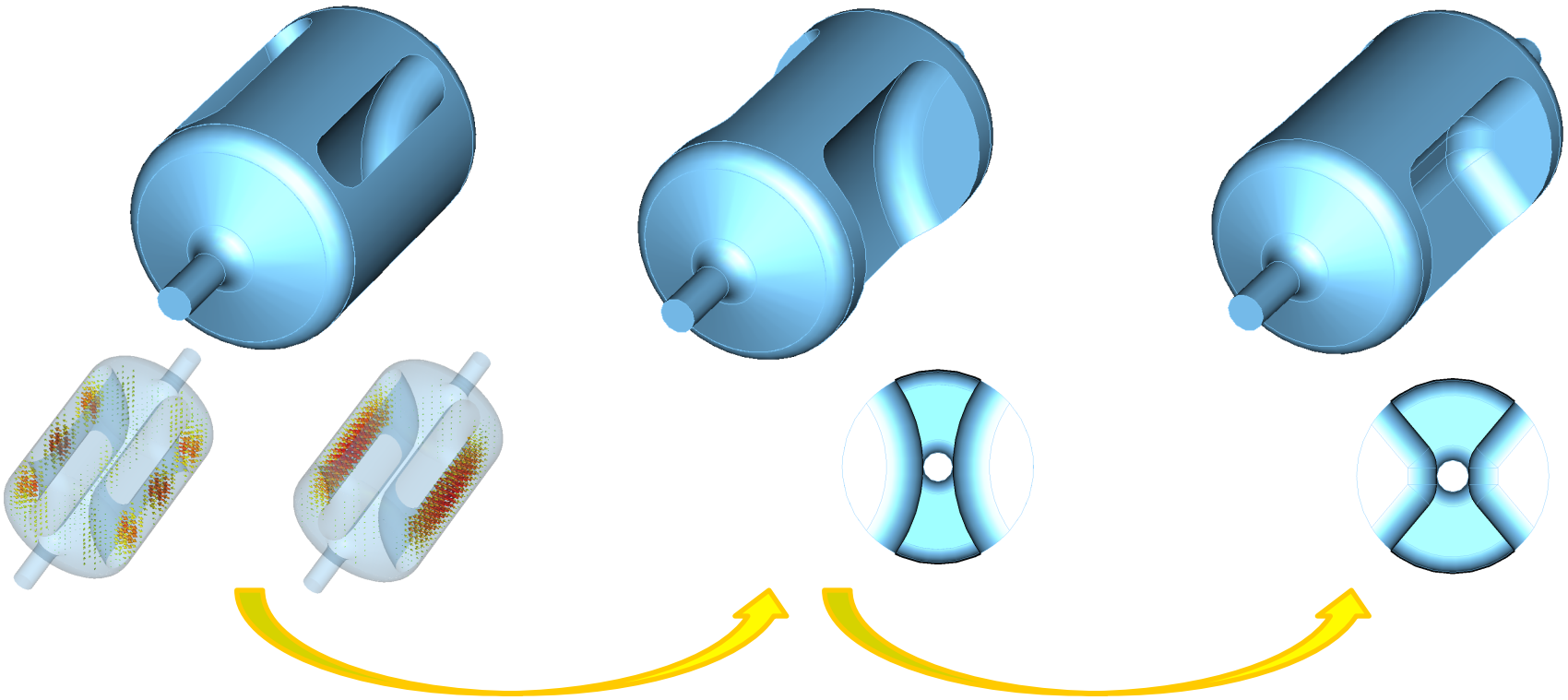

- To remove higher order modes with field distributions between the cavity outer surface and bar outer surface
- Eliminate multipacting conditions

- To lower peak magnetic field
- Reduced peak magnetic field by ~25%
- To achieve balanced peak surface fields of $\frac{B_P}{E_P} \leq 2.0 \text{ mT/(MV/m)}$

# Ridged Waveguide Cavity (SLAC)

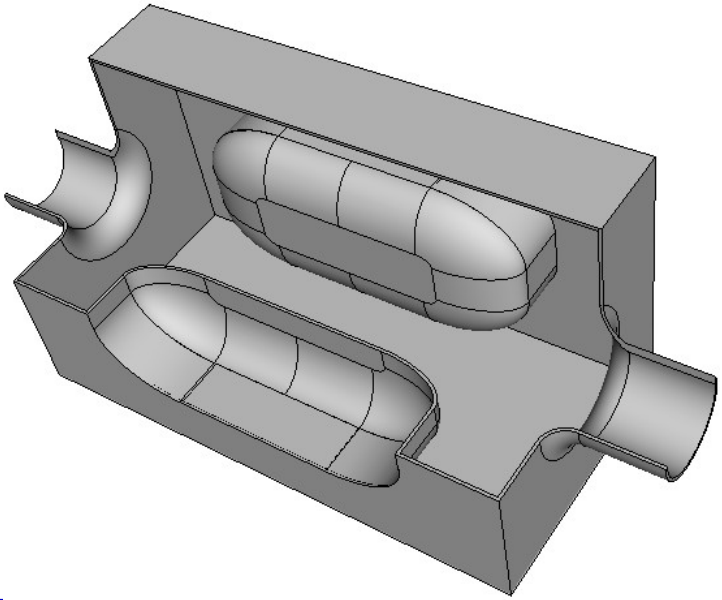

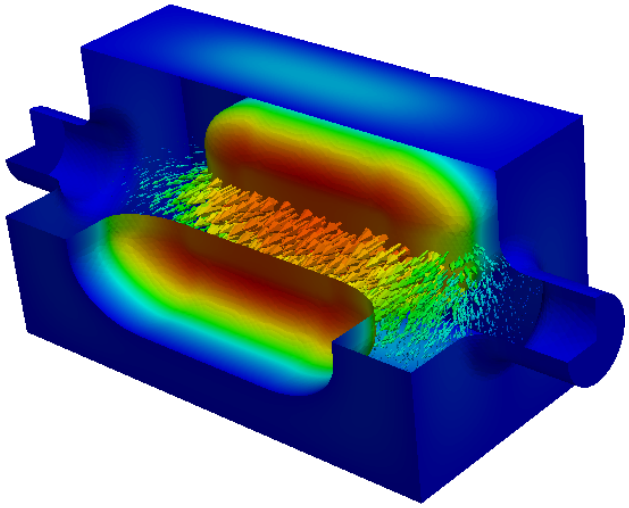

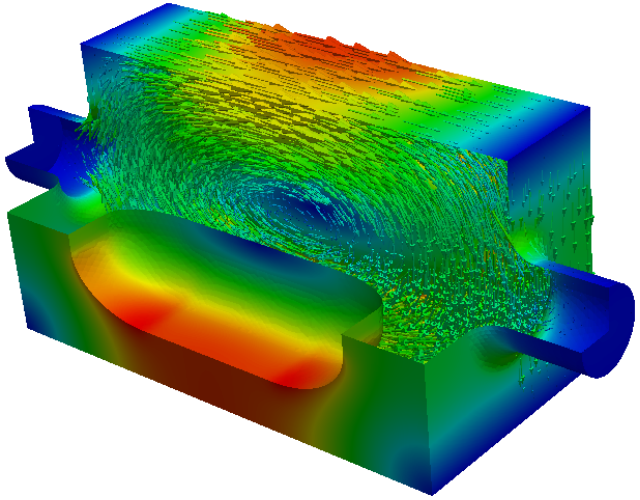

**400 MHz LHC Crabbing System – Zenghai Li**

# ODU/SLAC Cavity Properties

- Compact design
  - Supports low frequencies
- Fundamental deflecting/crabbing mode has the lowest frequency
  - No LOMs, no need for notch filter in HOM coupler
  - Nearest HOM widely separated ( ~ 1.5 fundamental)
- Low surface fields and high shunt impedance
- Good balance between peak surface electric and magnetic field
- Good uniformity of deflecting field due to high degree of symmetry

# Parallel Bar Cavity Activities at ODU/JLab

- **Deflecting Cavity**
  - Jefferson Lab 12 GeV Upgrade (499 MHz)
    (DOE-NP, ODU-Niowave P1 STTR completed)
  - *Project-X* (365.6 MHz)
    (ODU-Niowave P1 STTR completed)
- **Crabbing Cavity**
  - LHC Luminosity Upgrade (400 MHz)
    (LARP, ODU-Niowave P2 STTR)
  - Medium Energy Electron-Ion Collider (750 MHz)
    (ODU-Niowave P1 STTR completed, P2 STTR)

# Current Status

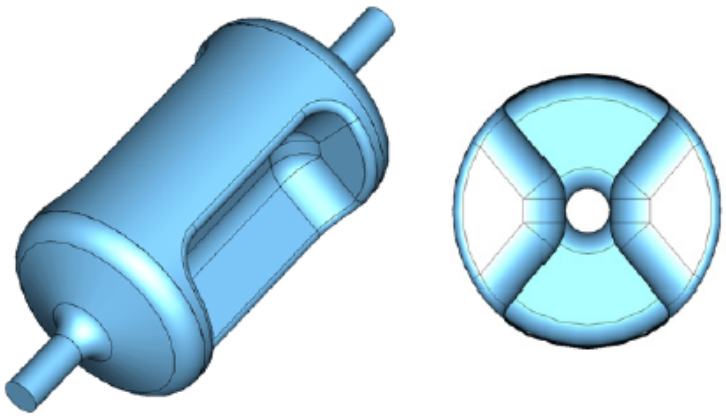

499 MHz JLab Upgrade Deflector
Fabrication under way

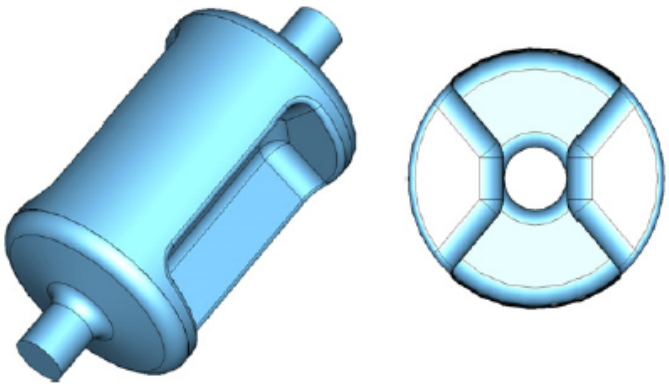

400 MHz LHC Crabbing System
Fabrication completed
In preparation for testing

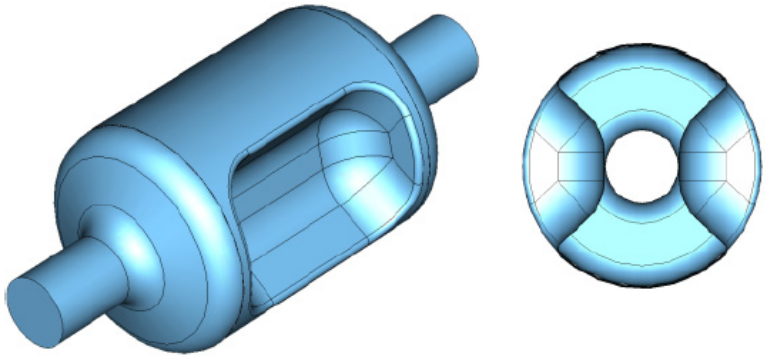

750 MHz MEIC Crabbing System
Fabrication underway

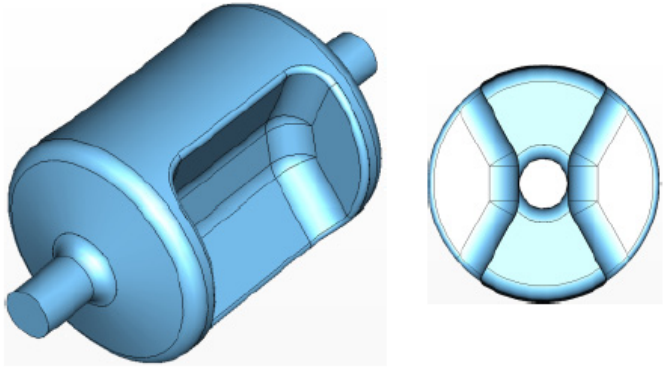

365 MHz Project X Deflector

# LHC Crabbing Cavity Requirements

- Local scheme - Operating rf frequency – 400 MHz
- Requires vertical and horizontal crabbing at the two interaction points (IP1 and IP5)
- Transverse voltage requirement - 10 MV per beam per side

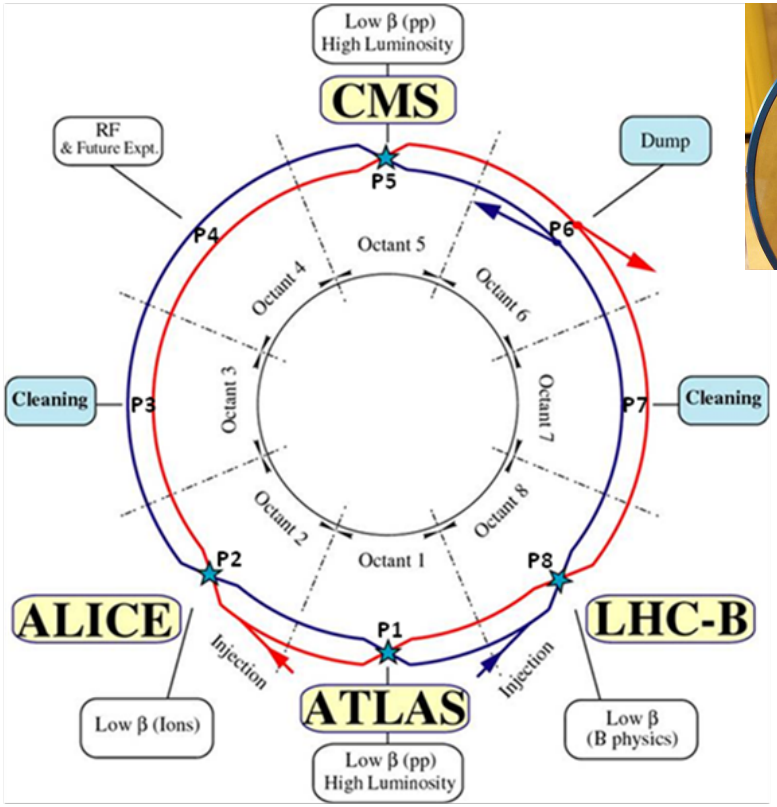


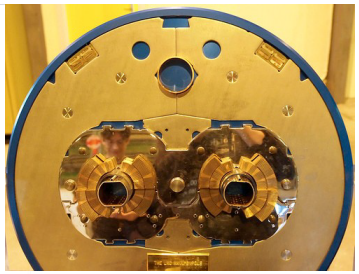

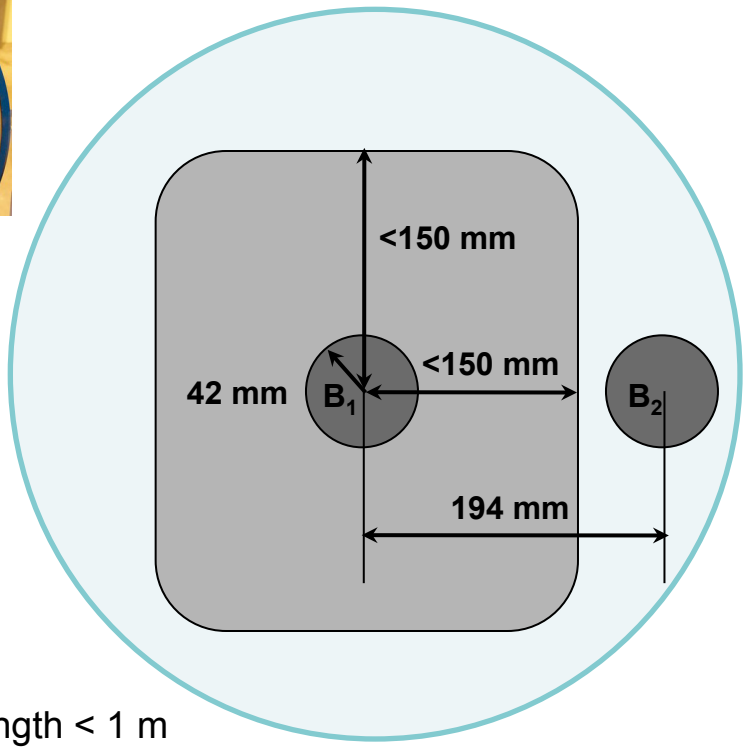


Cavity length < 1 m

# JLab Applications

## JLab 12 GeV RF Separator

- Operating RF Frequency – 499 MHz

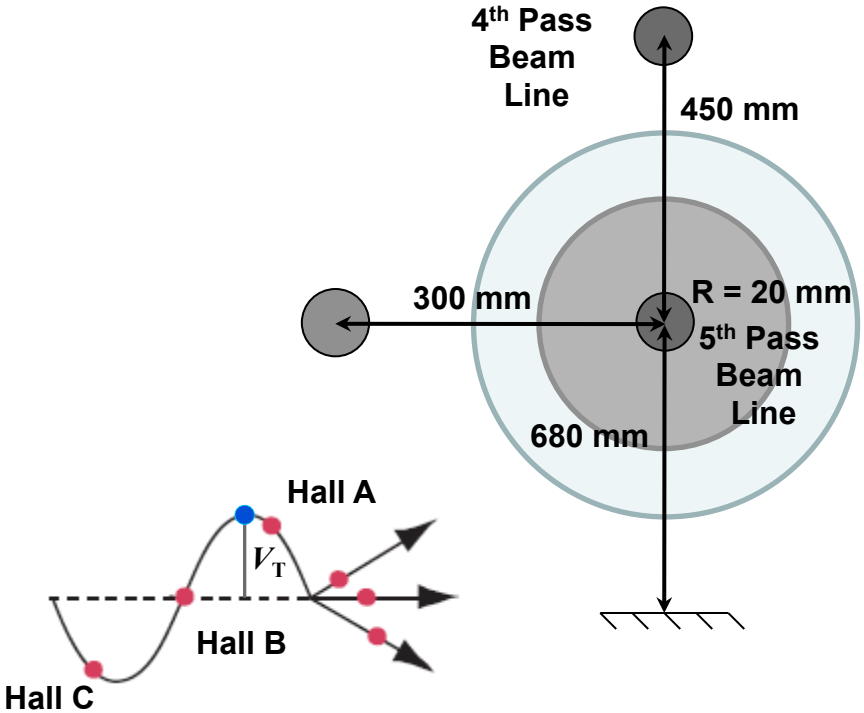


Deflecting Angle = 506 μrad

$V_T$ at peak = 5.6 MV

## JLab–MEIC Crabbing Cavity

- Operating frequency – 750 MHz
- Crabbing cavities for both
  - Proton beam = 60 GeV
  - Electron beam = 12 GeV
- $V_T$
  - Proton beam = 8 MV
  - Electron beam = 1.5 MV
- No dimensional constraints
- 60 mm beam aperture

# Design Optimization – 499 MHz

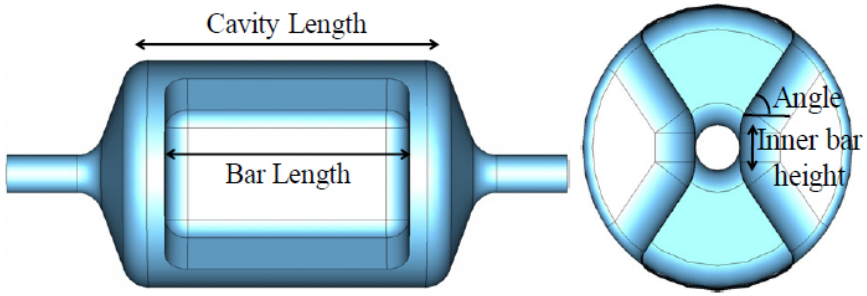


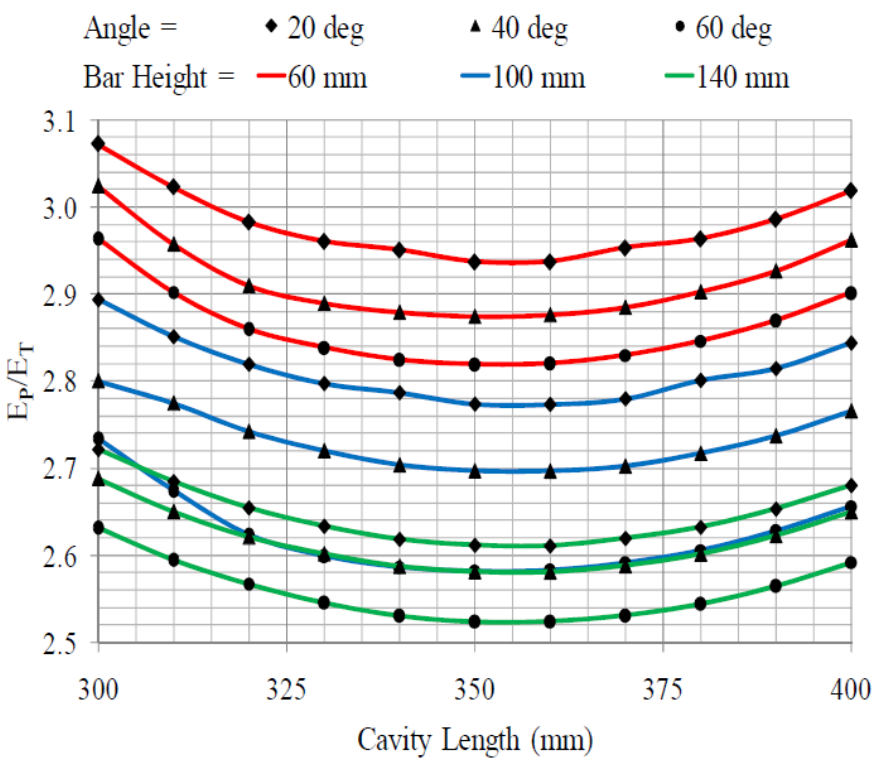


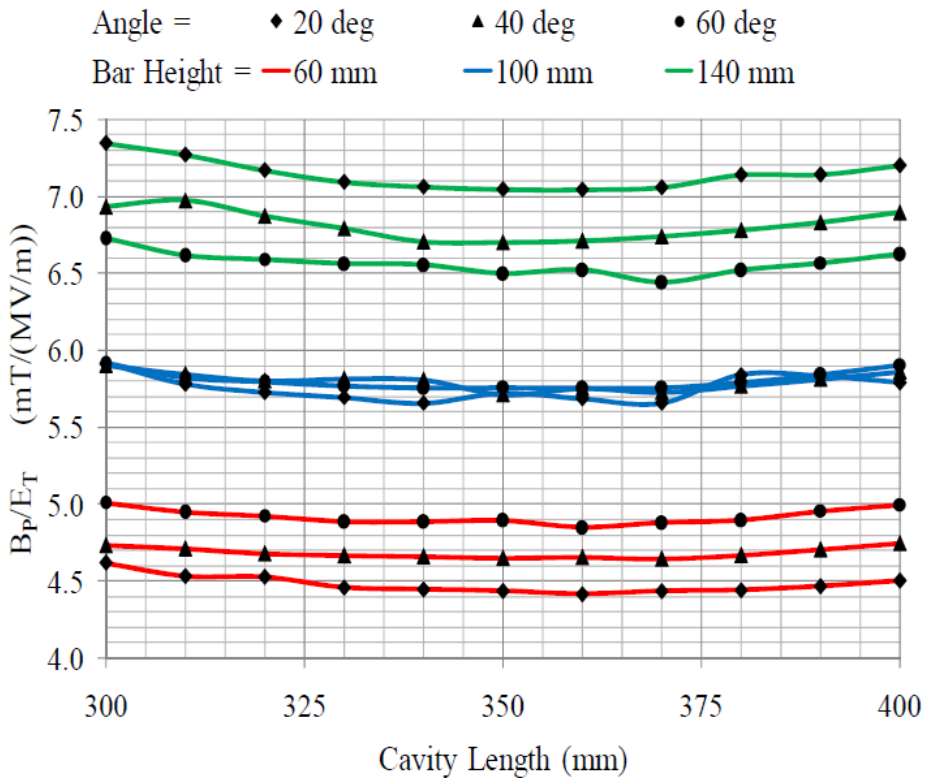

# Optimization of Bar Shape – 499 MHz

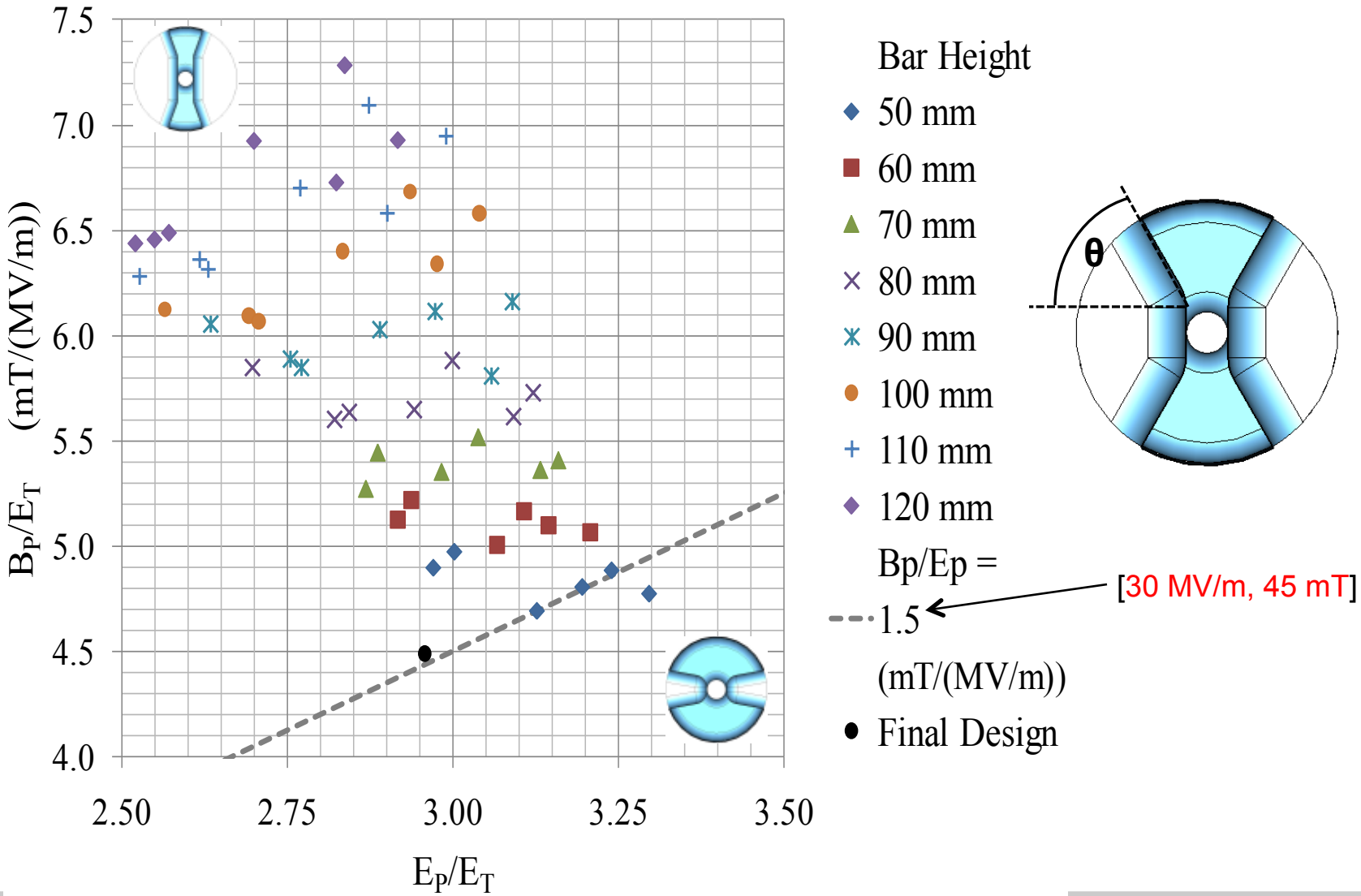

# Design Optimization – 400 MHz

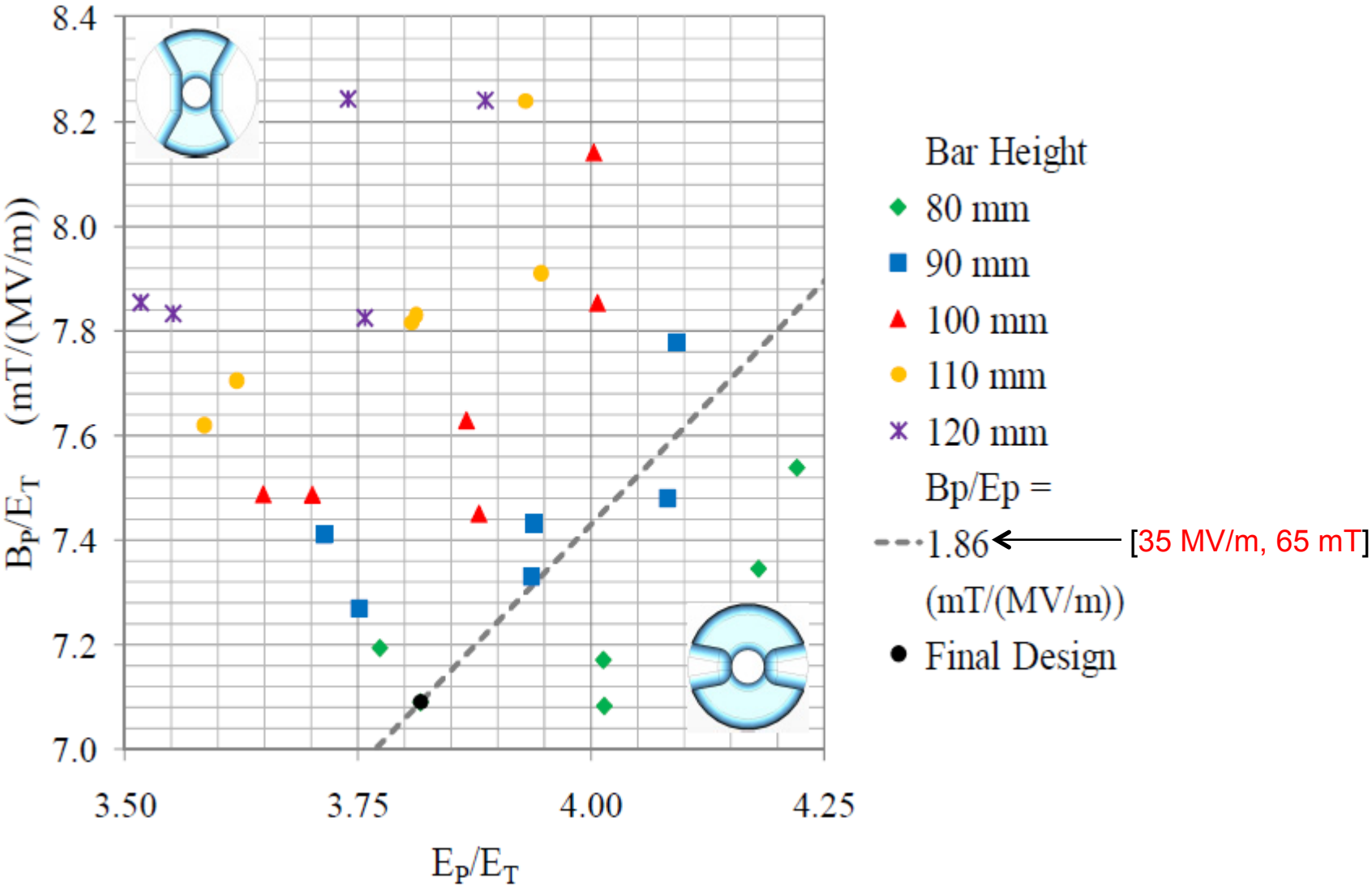

# Dependence of Beam Aperture

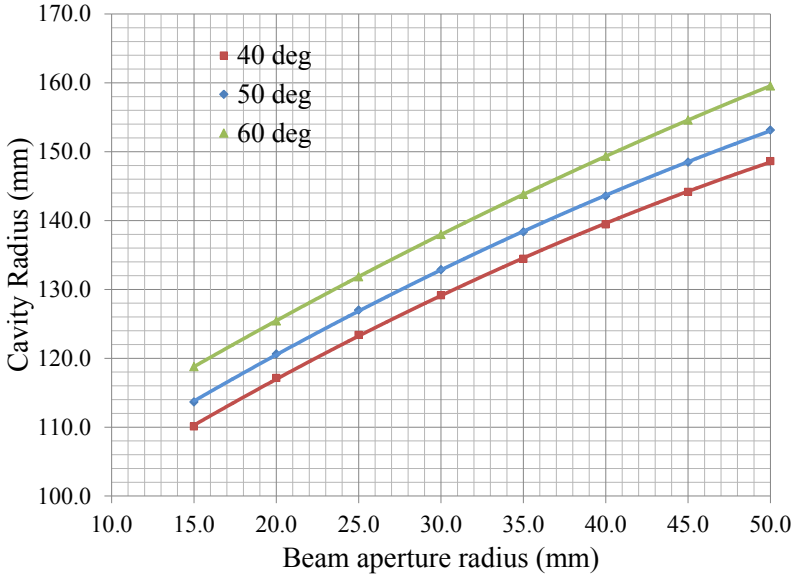


**At 499 MHz**

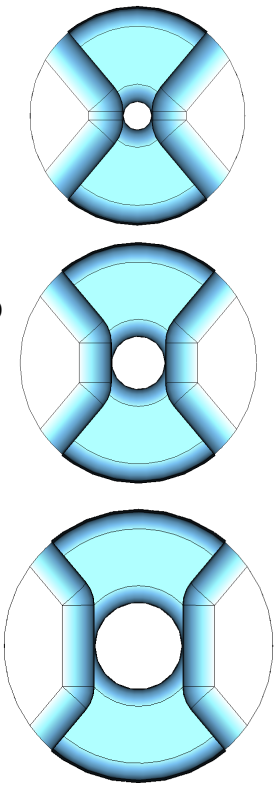

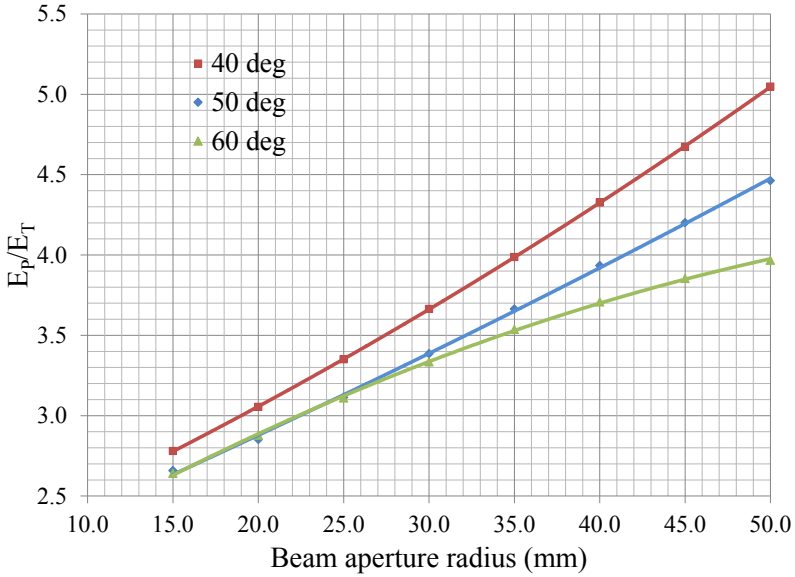


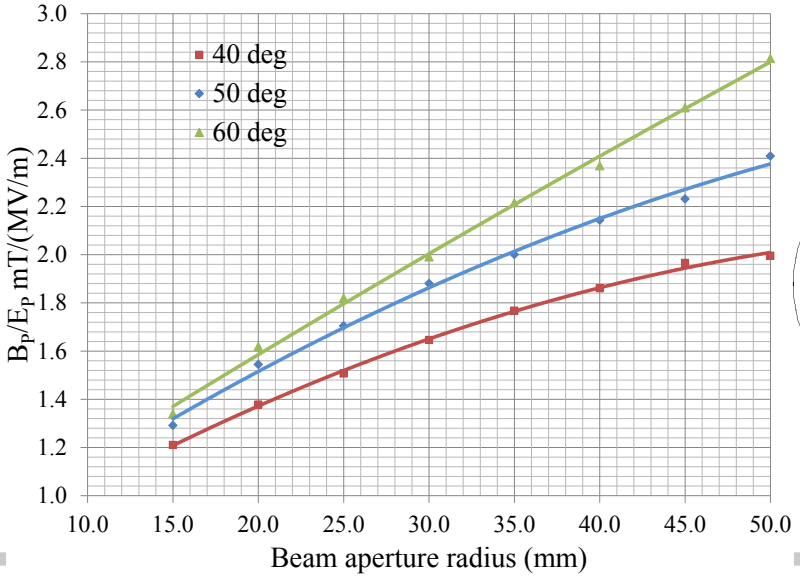


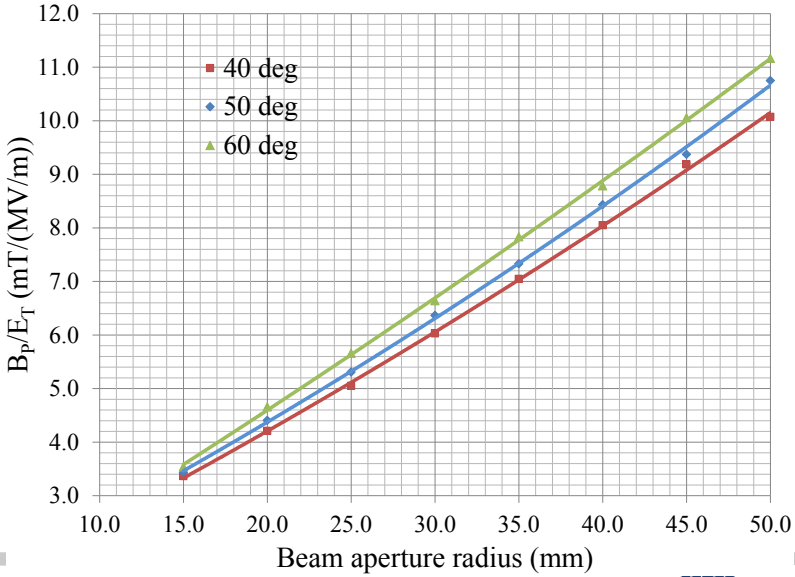

# Beam Aperture Dependence

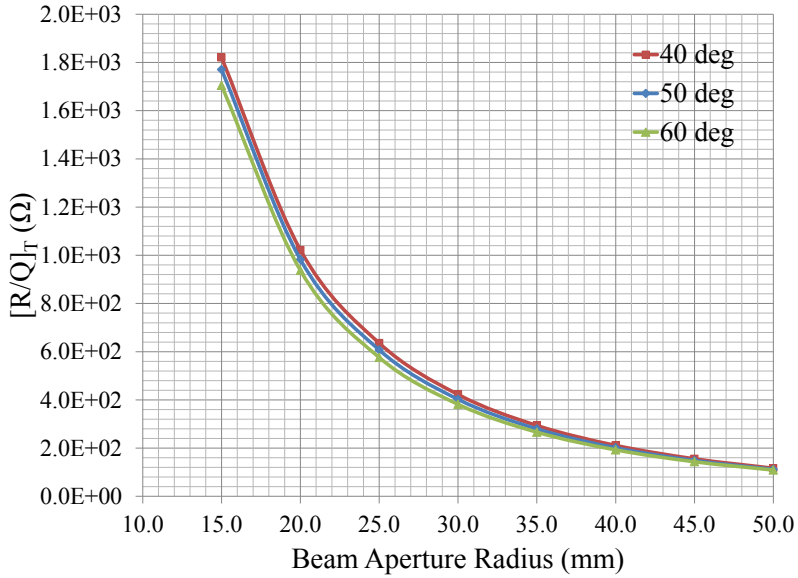


**At 499 MHz**

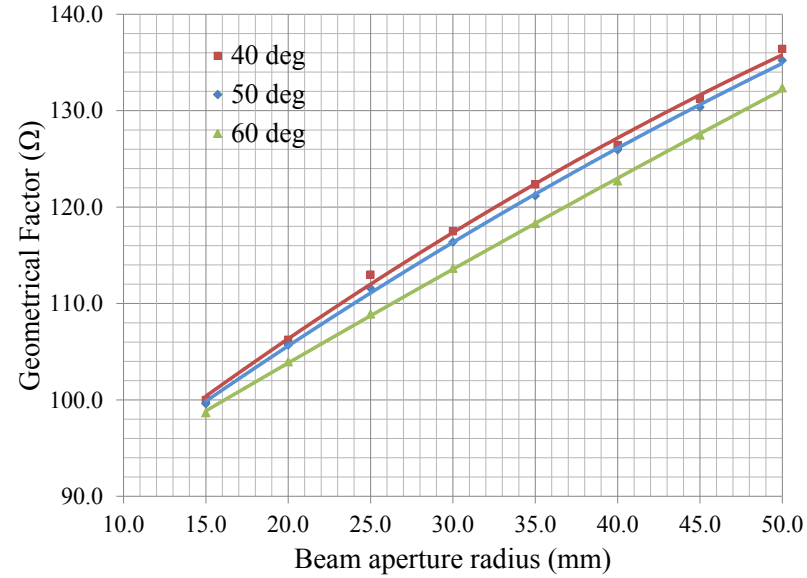


$$R_T R_S = \left[\frac{R}{Q}\right]_T Q R_S$$

$$= \left[\frac{R}{Q}\right]_T G$$

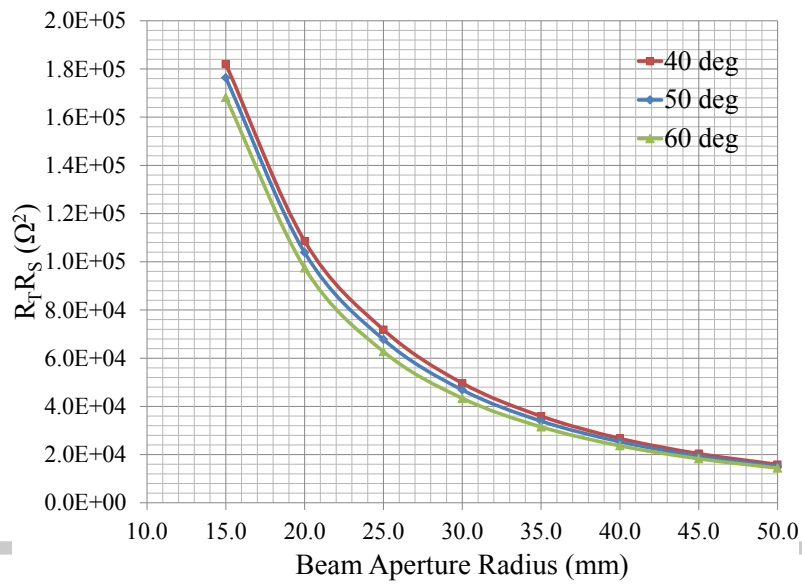

# Parallel-Bar Cavity Properties

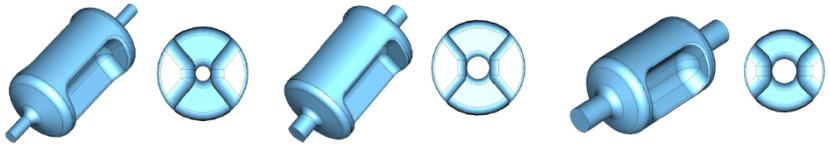

| Parameter | 499 MHz | 400 MHz | 750 MHz | Unit |
|---|---|---|---|---|
| λ/2 of π mode | 300.0 | 375.0 | 200.0 | mm |
| Frequency of 0 mode | 1036.1 | 887.0 | 1376.7 | MHz |
| Nearest mode to π mode | 777.0 | 589.5 | 1062.5 | MHz |
| Cavity reference length | 440.0 | 527.2 | 270.0 | mm |
| Cavity diameter | 241.2 | 339.9 | 95.1 | mm |
| Bars length | 260.0 | 350.0 | 200.0 | mm |
| Bars inner height | 50.0 | 80.0 | 63.0 | mm |
| Angle | 50.0 | 50.0 | 45.0 | mm |
| Aperture diameter | 40.0 | 84.0 | 60.0 | mm |
| Deflecting voltage ($V_T^*$) | 0.3 | 0.375 | 0.2 | MV |
| Peak electric field ($E_P^*$) | 2.86 | 3.9 | 4.29 | MV/m |
| Peak magnetic field ($B_P^*$) | 4.38 | 7.13 | 9.3 | mT |
| $B_P^* / E_P^*$ | 1.53 | 1.83 | 2.16 | mT / (MV/m) |
| Geometrical factor ($G = QR_S$) | 105.9 | 138.7 | 136.0 | Ω |
| $[R/Q]_T$ | 982.5 | 287.2 | 125.0 | Ω |
| $R_T R_S$ | $1.0\times10^5$ | $4.0\times10^4$ | $1.7\times10^4$ | $\Omega^2$ |
| At $E_T^* = 1$ MV/m | | | | |

# HOM Properties of 499 MHz Cavity

## No Lower Order Modes

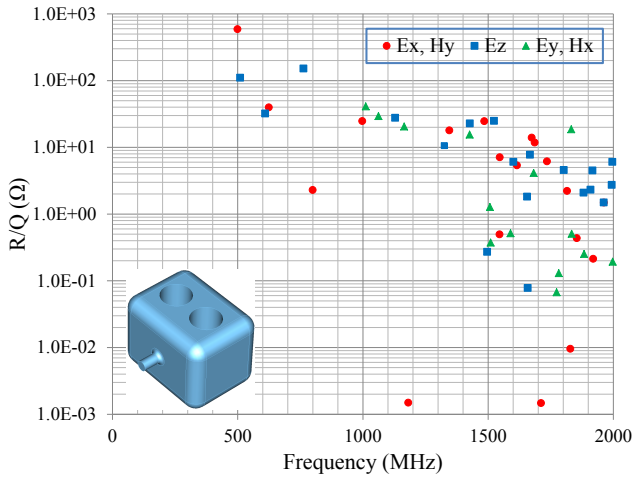


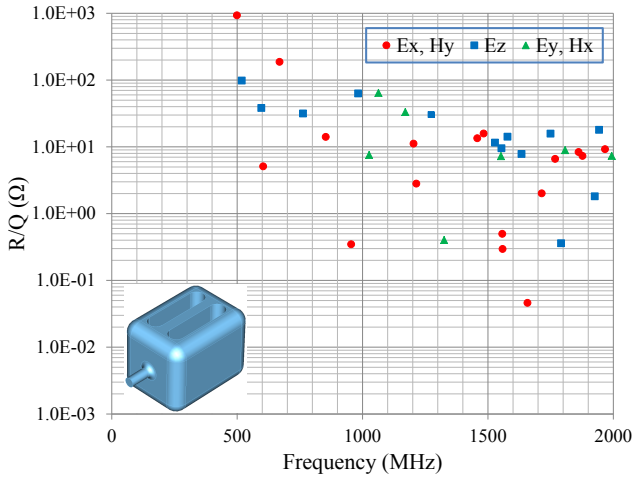


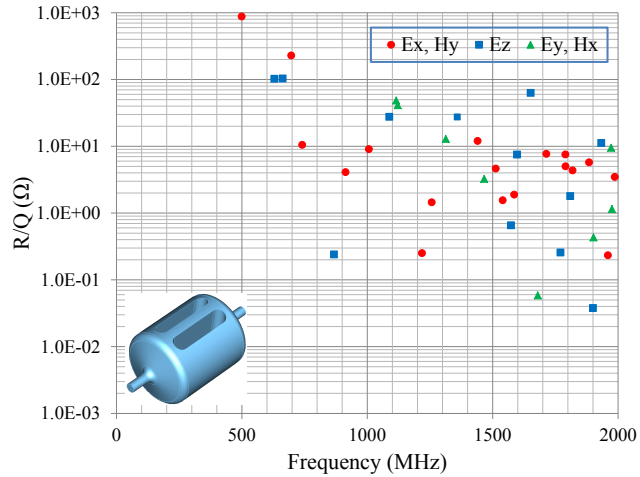


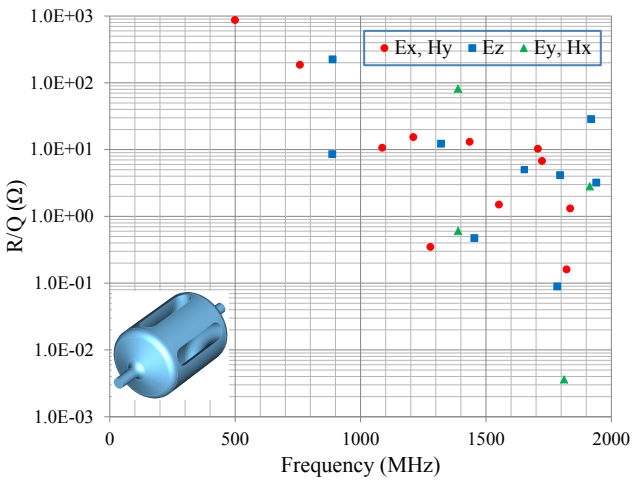


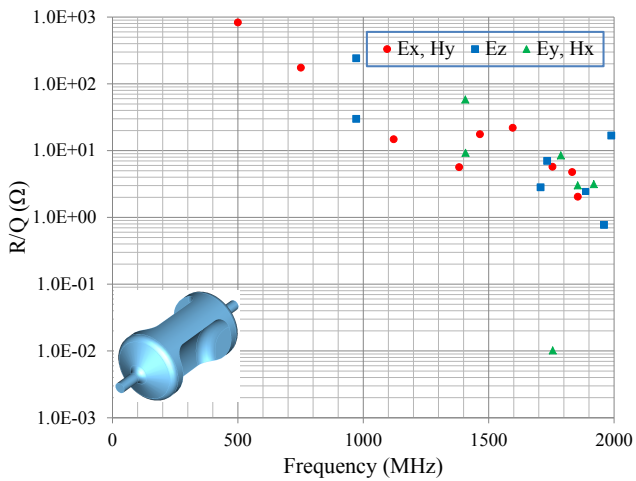


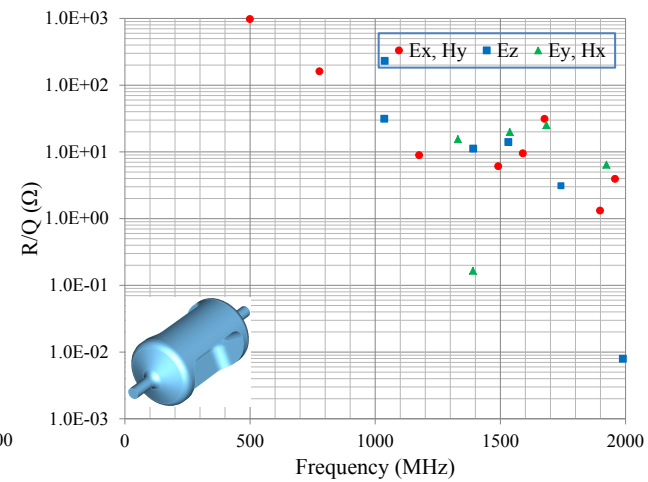

# HOM Properties of 400 MHz Cavity

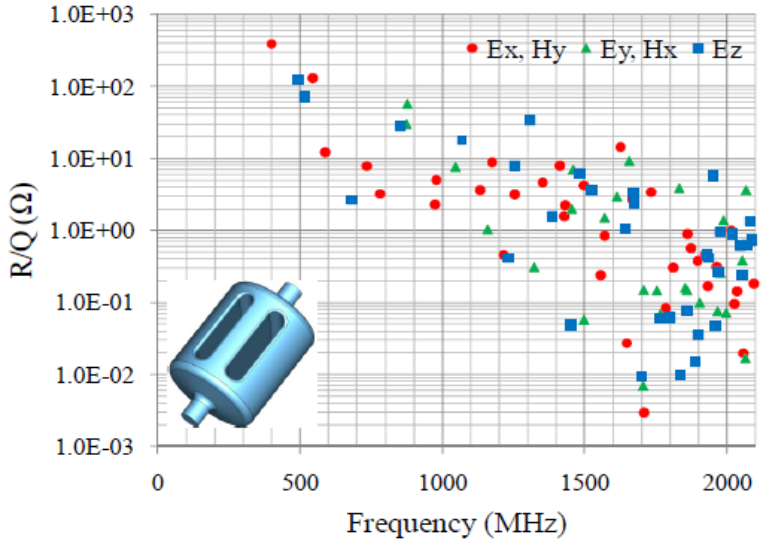


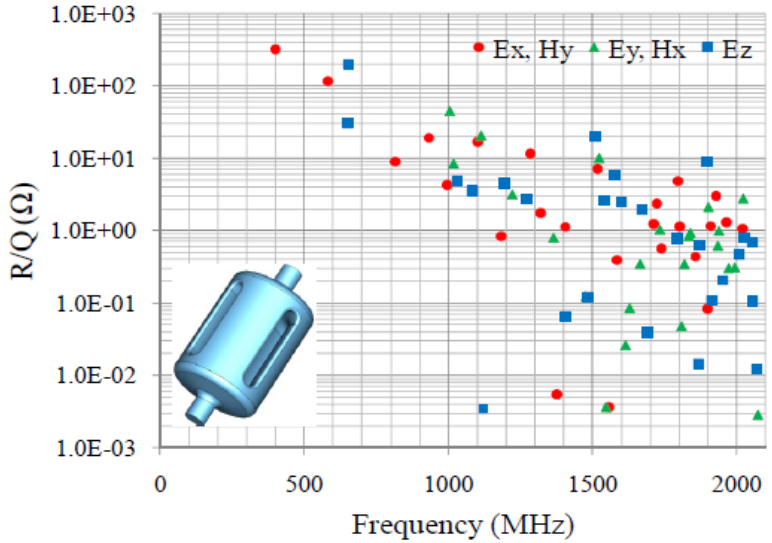


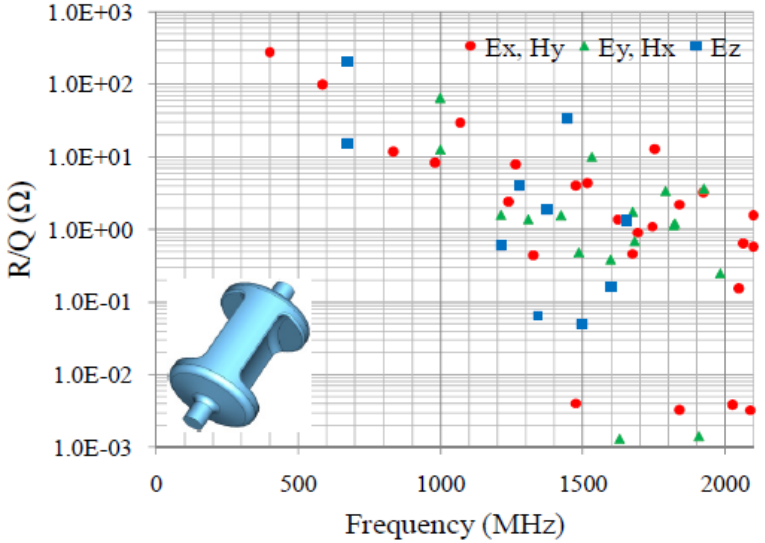


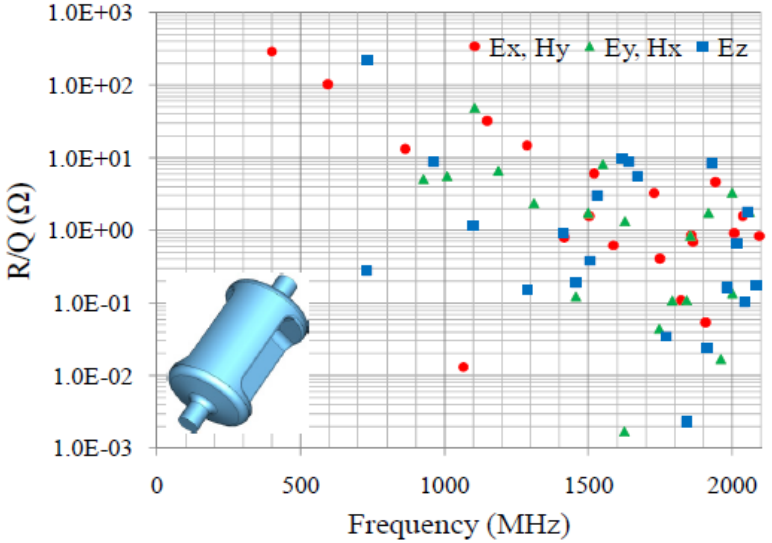

# Pressure Sensitivity – 499 MHz

- Mechanical analysis - ANSYS

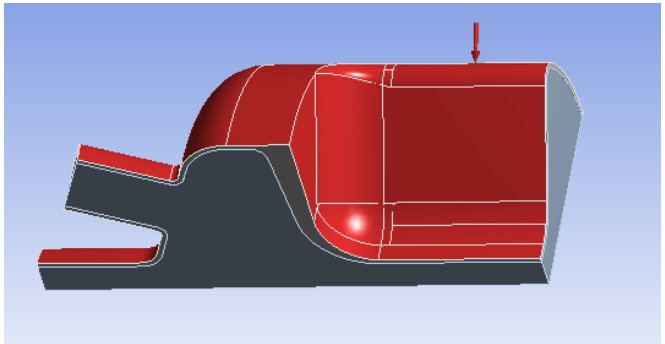

- Fixed support at the beam pipe ends
- Varying external pressure up to 1 atm
- Inside vacuum is deforming by the cavity deformation
- Deformed vacuum is extracted and the frequency is solved by ANSYS high frequency eigen solver
- Frequency is not 499 MHz before the deformation because the cavity is oversized anticipating the thermal shrink at 2-4K

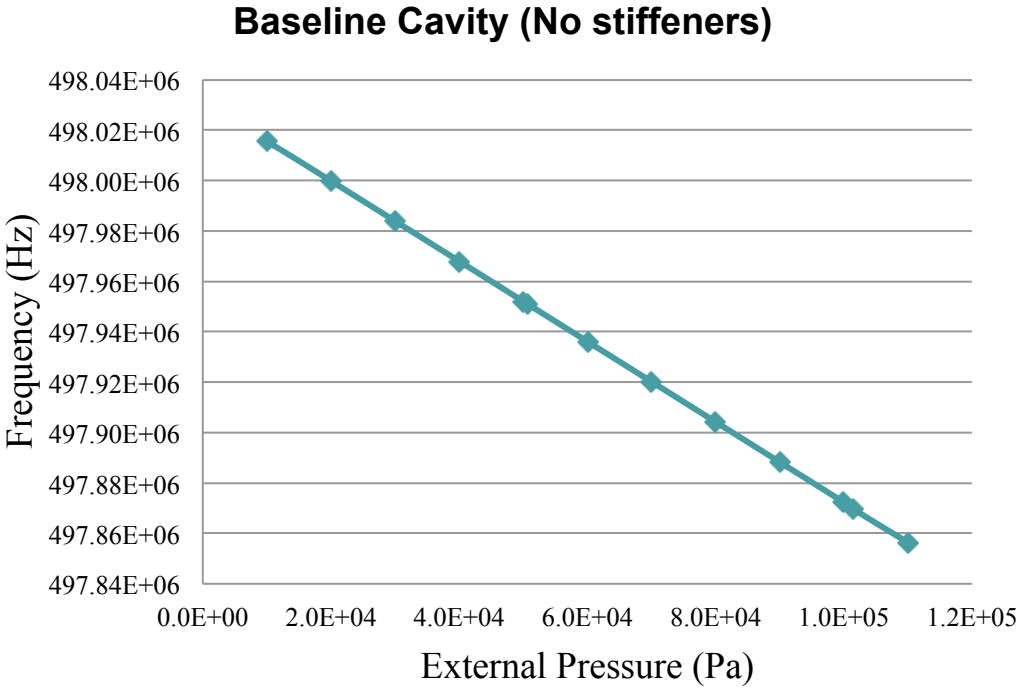


**Pressure sensitivity -212 Hz/torr**

**HyeKyoung Park**

# Pressure Sensitivity – 499 MHz

- Effect of surface's deformation to the frequency shift
- One surface is artificially fixed (no deformation) at a time and the vacuum load is applied
- Mechanical stability of the cap is most helpful to decrease the frequency change
- The 'Bar' needs to be constrained against the pressure
- The surfaces 'slope' and 'OC' seem to compensate each other, constraining one against the other does not help

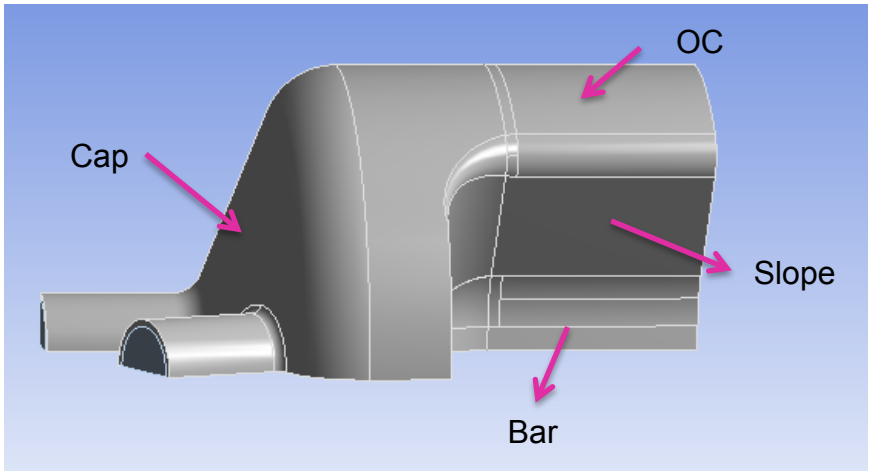


| Fixed surface | F1 (Hz) | F2 (Hz) | F2-F1 (Hz) | Hz/Torr | Deformation (mm) | | | |
|---|---|---|---|---|---|---|---|---|
| | | | | | Bar | OC | Slope | Cap |
| Bar | 498031682 | 498139282 | 107601 | 141 | 0 | 0.073 | 0.060 | 0.02 |
| Cap | 498031682 | 498026821 | -4861 | -6 | 0.0017 | 0.040 | 0.100 | 0 |
| OC | 498031682 | 497959878 | -71804 | -94 | 0.0028 | 0 | 0.100 | 0.02 |
| Slope | 498031682 | 498076554 | 44872 | 59 | 0.0036 | 0.045 | 0 | 0.02 |
| Bar and Cap | 498031682 | 498112353 | 80671 | 106 | 0 | 0.055 | 0.066 | 0 |
| Cap and Slope | 498031682 | 498064828 | 33146 | 44 | 0.0037 | 0.038 | 0 | 0 |

F1: Frequency before the deformation
F2: Frequency after the deformation

# JLab Deflecting Cavity – 499 MHz

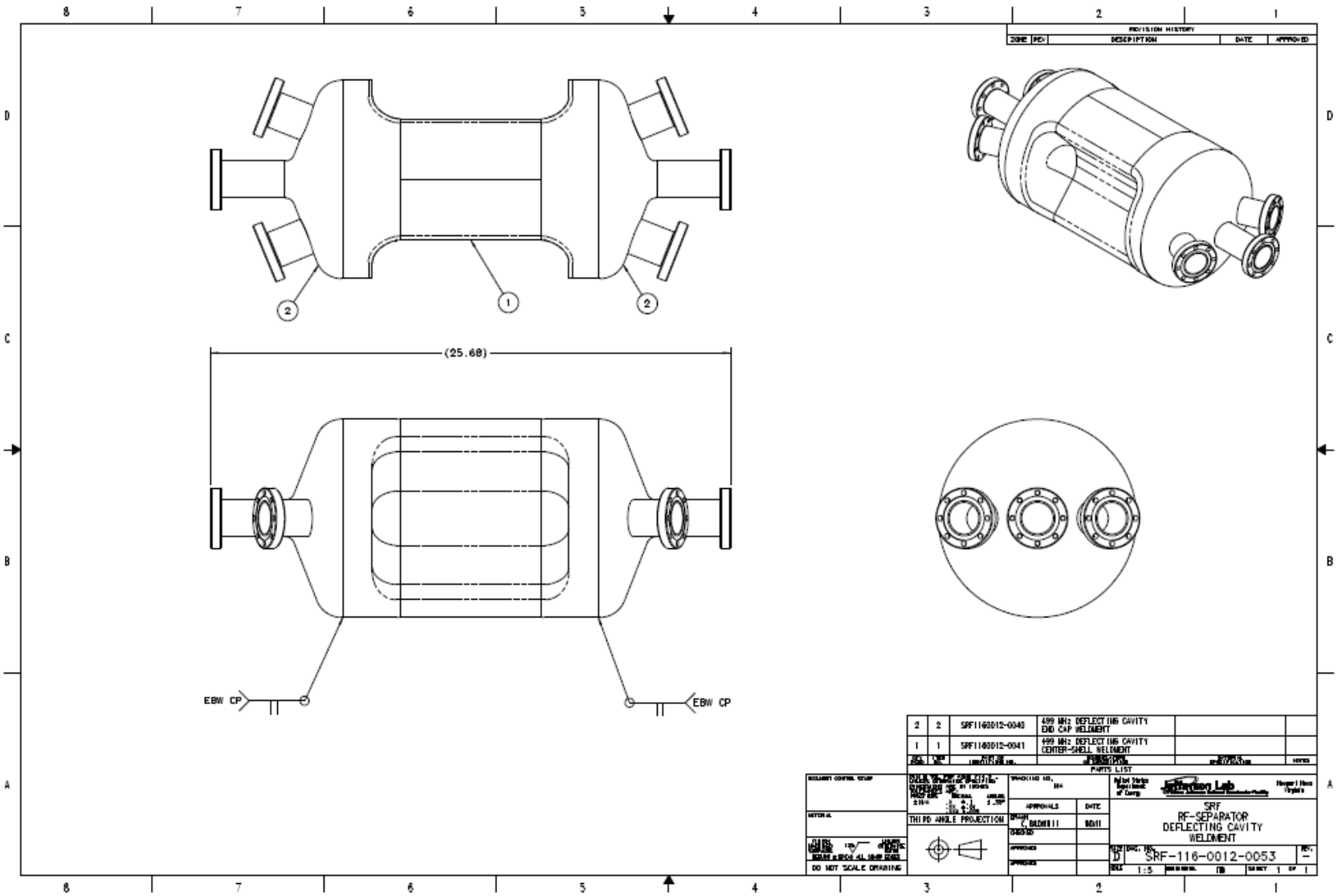

# Body Weldment – 499 MHz

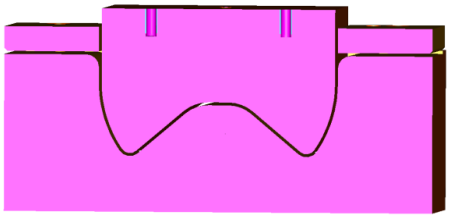

Center shell forming
(Die cross section)

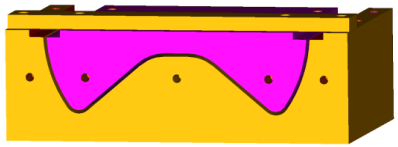

Center shell machining
Weld margin included

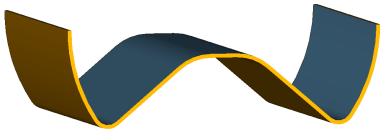

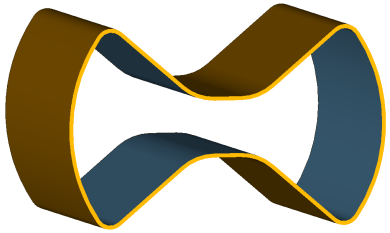

EBW seams: 40% pre-pass, 50kV
48mAmp 6 in/min beam speed
Welding will be both sides to ensure
the smooth surface inside

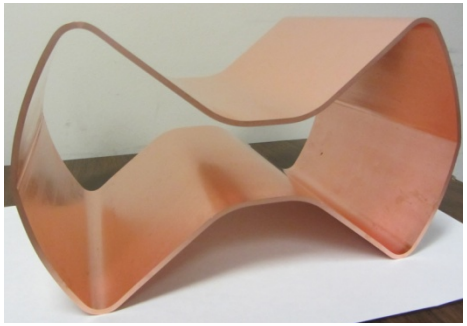

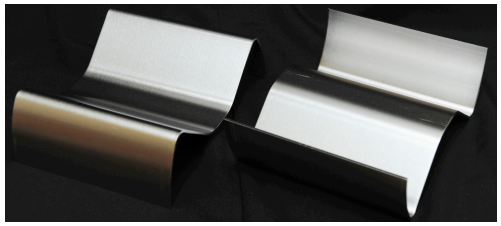

# Center Block – 499 MHz

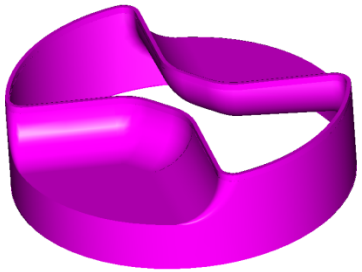

Machined cavity shoulder

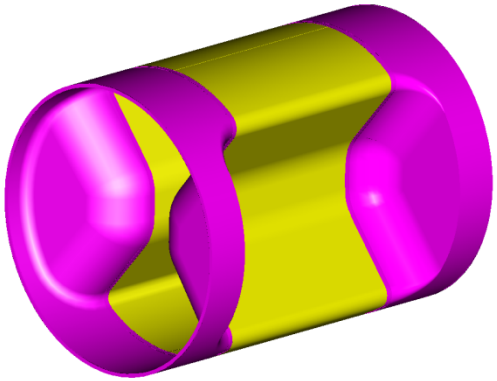

Welding cavity shoulder and center shell

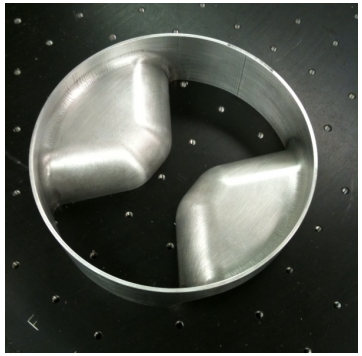

End cap side

Center shell side

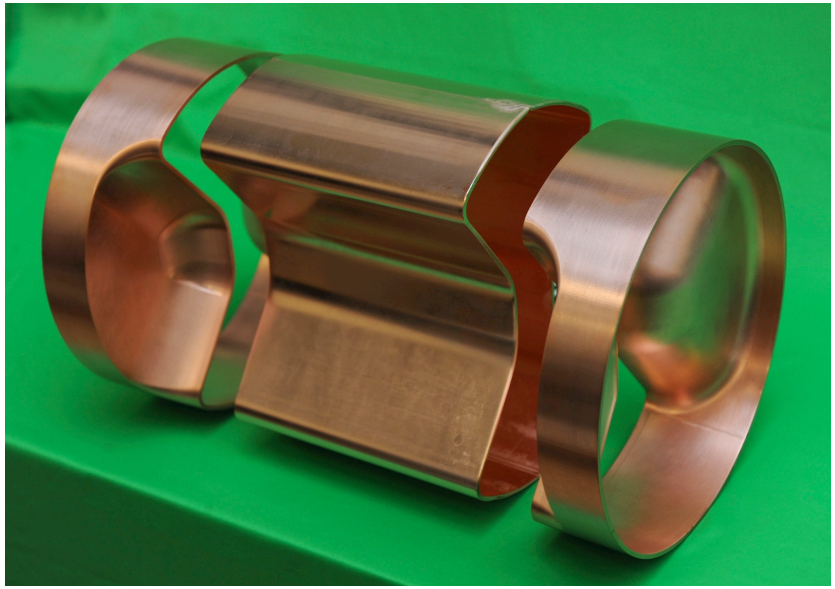

# Niobium Beam Ports with Nb-Ti Flanges

Al-Mg gaskets for final assembly

For tunings and measurements
Indium seal will be used

# End Cap Weldment – 499 MHz

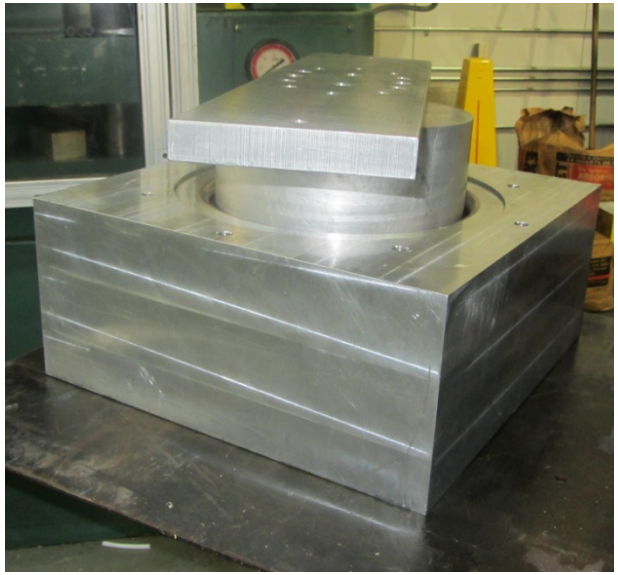

# LHC Crabbing Cavity – 400 MHz

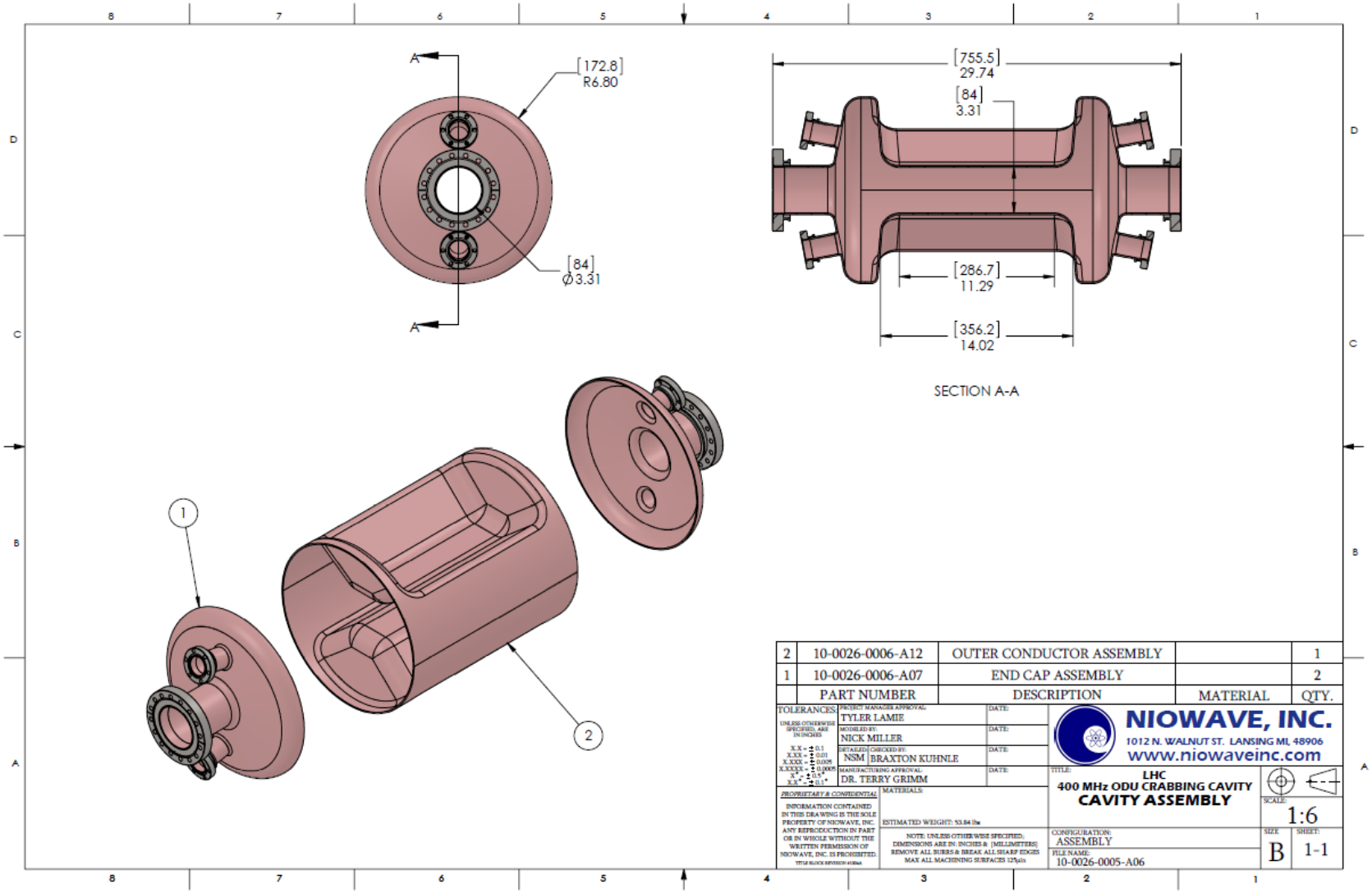

# End Cap Fabrication – 400 MHz

# Fabrication of the Body – 400 MHz

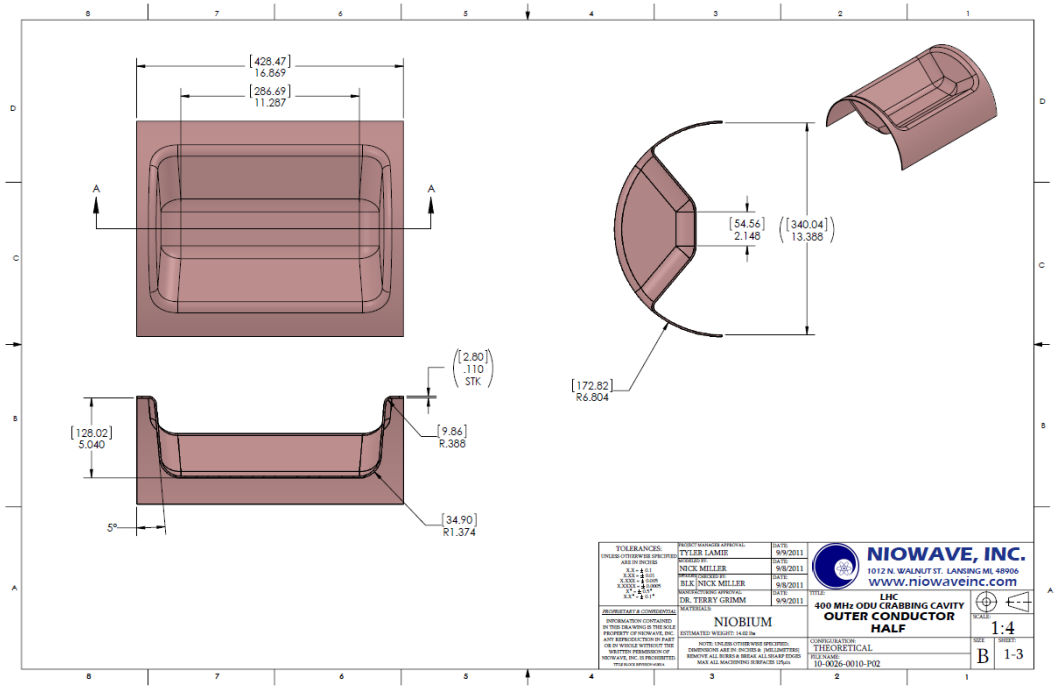


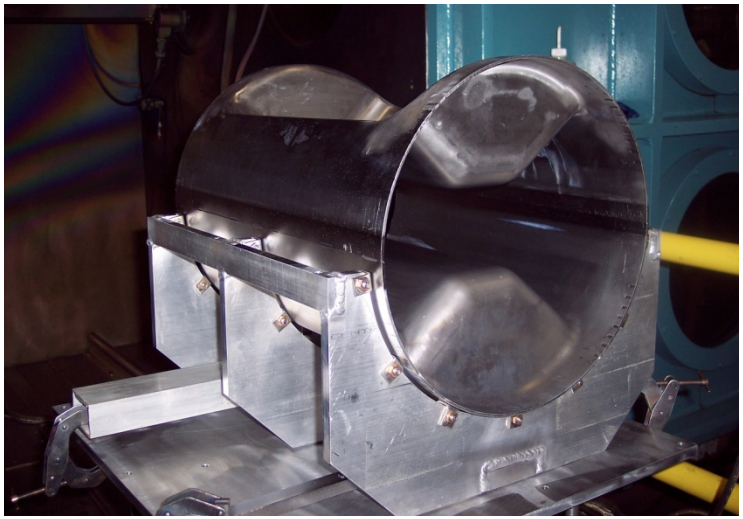

# Room Temperature Measurements

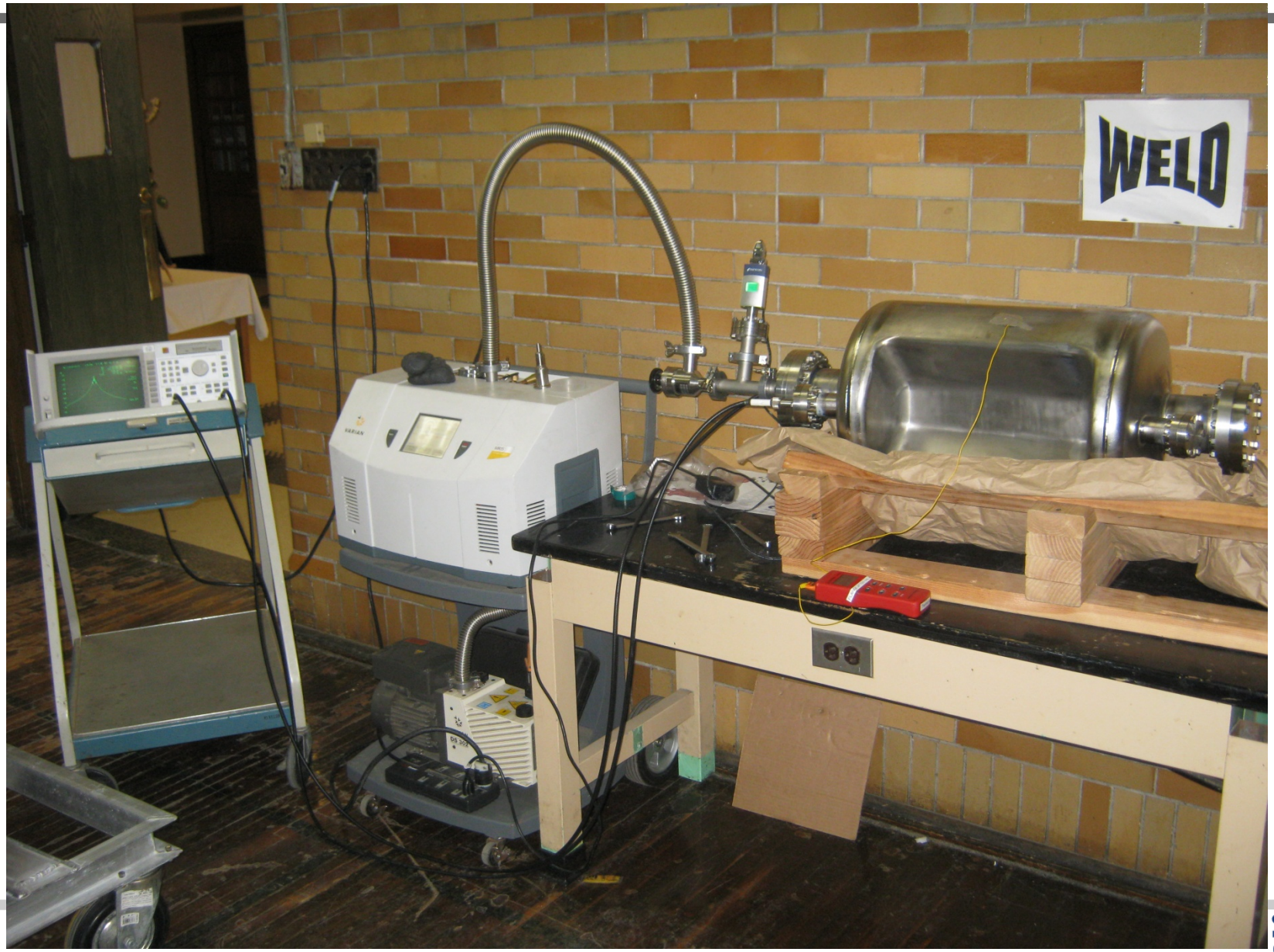

# Frequency Measurements – 400 MHz

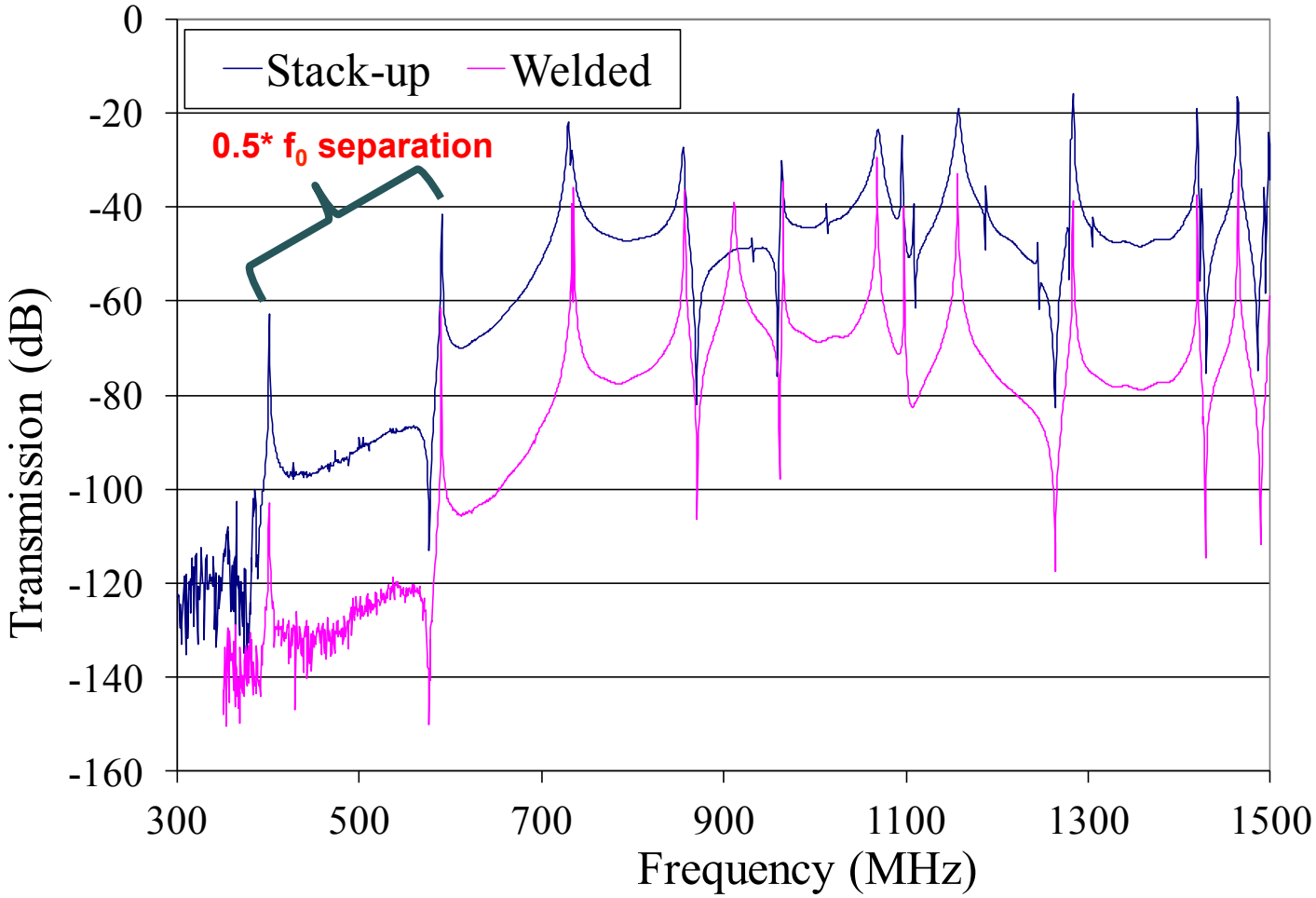

# 499 MHz and 400 MHz Cavity Plan

- Work in progress to start testing in July
- 499 MHz Design
  - Electropolishing of parts
  - Weld preparation and assembly welding
  - Final light BCP and high pressure rinse
  - LLRF system exist
- 400 MHz Design
  - Completed EB welded cavity @ JLab
  - Bulk BCP and high pressure rinse
  - LLRF system is required
- $600^0$ C baking in the furnace
- In-situ baking at $120^0$ C in vacuum
- 500 W rf amplifier: 300-800 MHz
- rf testing at 2K and 4K
- Variable power coupler

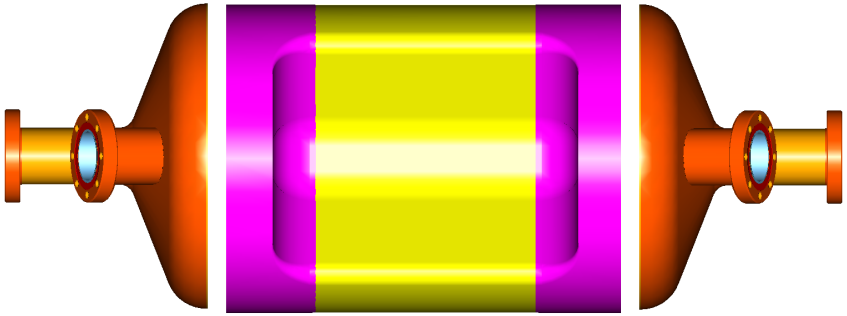

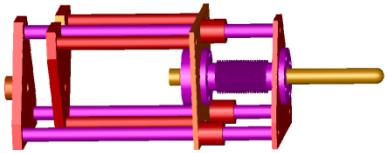

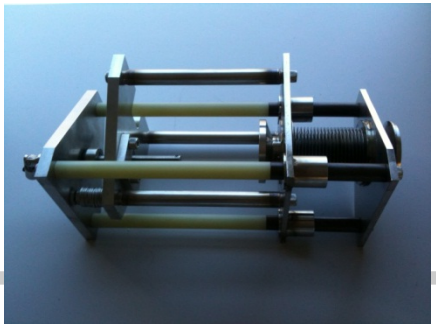

# 750 MHz Crabbing Cavity

- Crabbing cavity for proposed Medium-Energy Electron-Ion Collider (MEIC)
- Desired net deflection
  - $e^-$ beam: 1.5 MV
  - p beam: 8 MV
- Fabrication
  - Beam ports are finished
  - Center body fabrication - started

| Parameter | 750 MHz | Unit |
|---|---|---|
| Nearest mode to $\pi$ mode | 1062.5 | MHz |
| Deflecting voltage ($V_T^*$) | 0.2 | MV |
| Peak electric field ($E_P^*$) | 4.29 | MV/m |
| Peak magnetic field ($B_P^*$) | 9.3 | mT |
| Geometrical factor ($G = QR_S$) | 136.0 | Ω |
| $[R/Q]_T$ | 125.0 | Ω |
| At $E_T^* = 1$ MV/m | | |

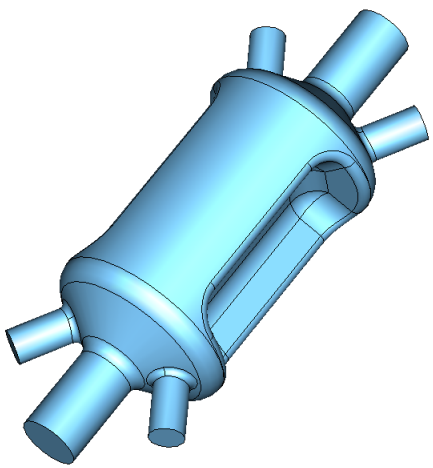

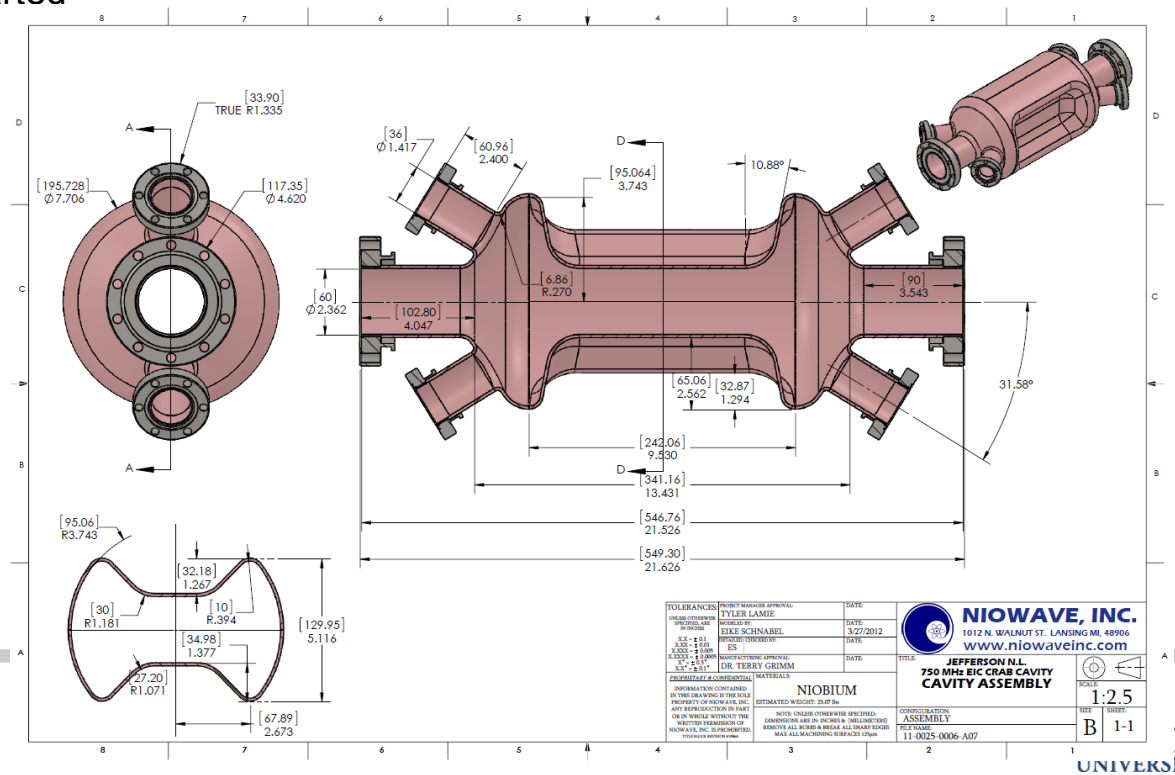


* Work in progress by; Alex Castilla

# ODU/SLAC 400 MHz Square Cavity Options

- Designs are fairly similar in structure and properties
- Final design depends on final specifications
  - Field uniformity
  - Impedance budget

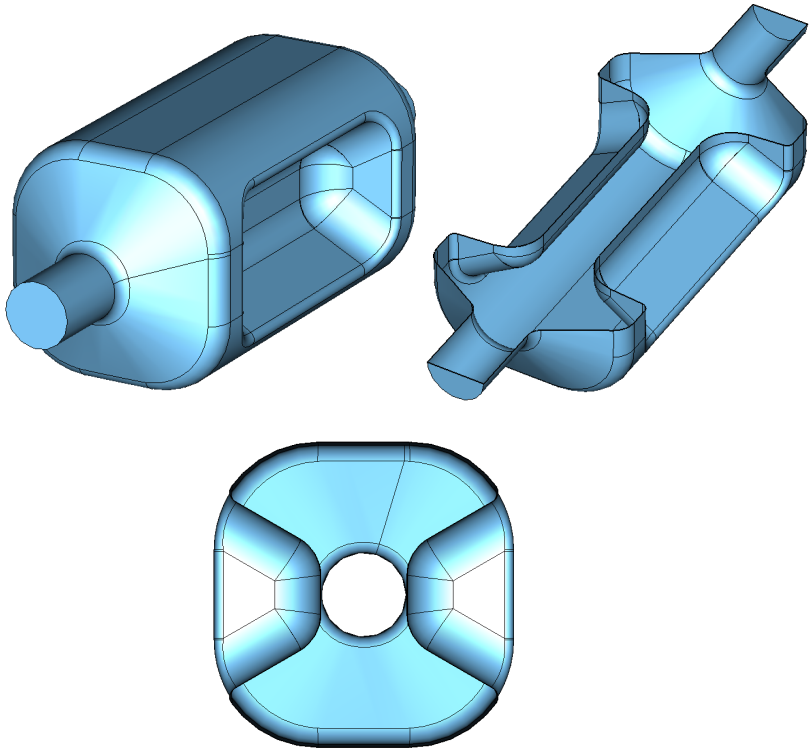

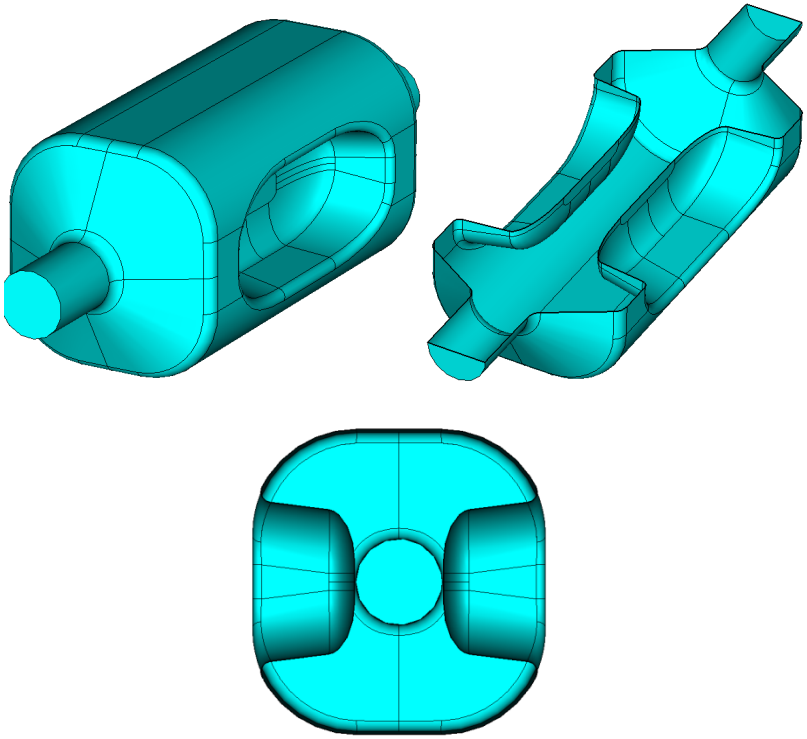

# Field Distribution / Surface Fields

E Field | H Field | Peak E Field | Peak H Field

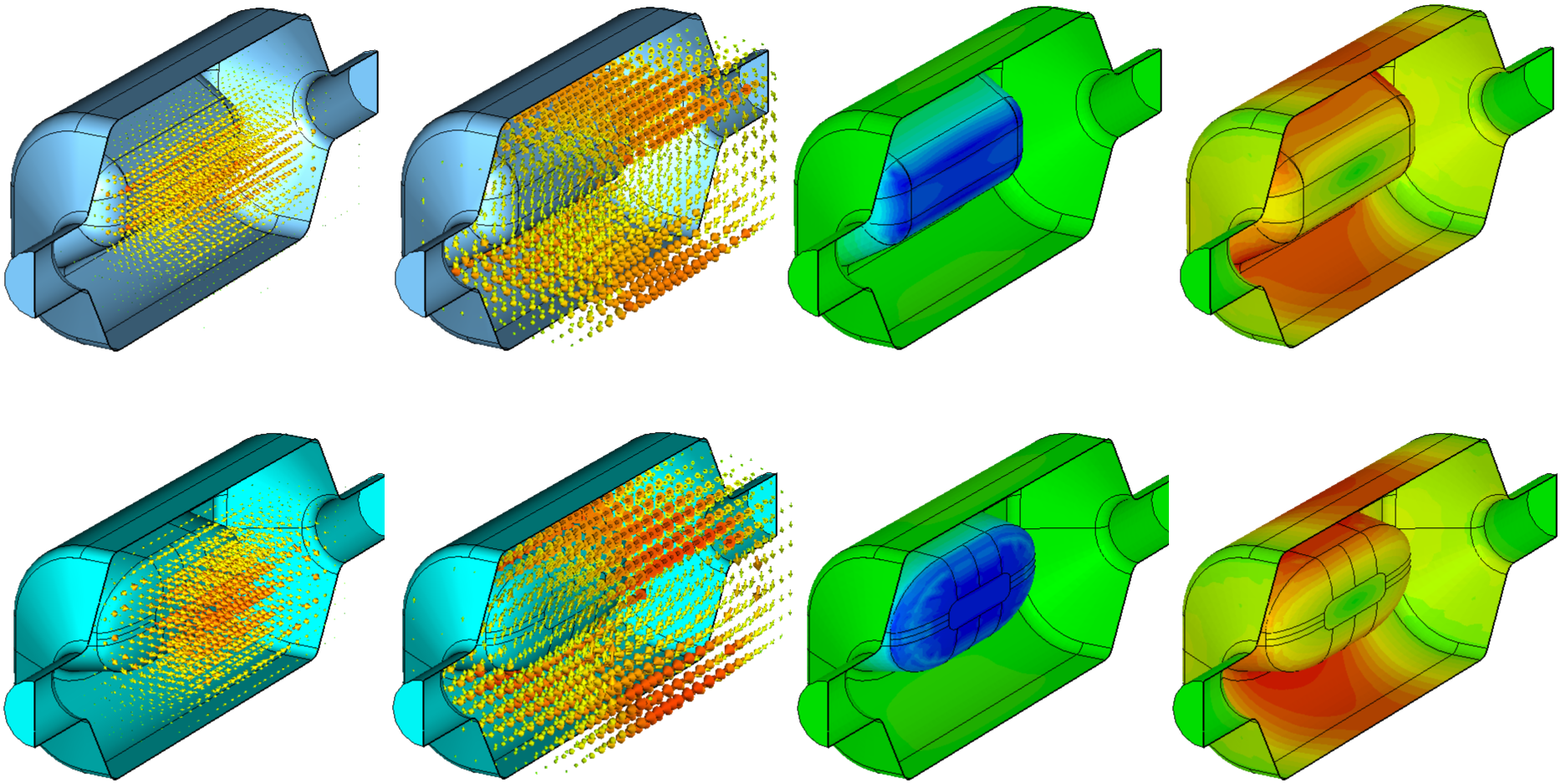

# 400 MHz Square Cavity Design Properties

| Parameter | 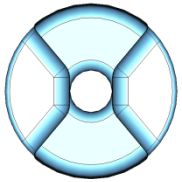 | 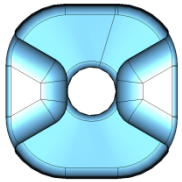 | 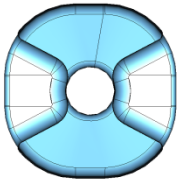 | 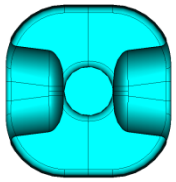 | Unit |
|---|---|---|---|---|---|
| Nearest mode to π mode | 593.4 | 593.2 | 581.8 | 612.5 | MHz |
| Cavity reference length | 520.0 | 597.2 | 597.2 | 597.2 | mm |
| Cavity diameter | 339.8 | 295.0 | 295.0 | 295.0 | mm |
| Bars length | 345.0 | 350.3 | 350.3 | 350.3 | mm |
| Bars height | 80.0 | 85.0 | 85.0 | 136.0 | mm |
| Angle | 50.0 | 30.0 | 30.0 | 11.0 | deg |
| Aperture diameter | 84.0 | 84.0 | 84.0 | 84.0 | mm |
| Deflecting voltage ($V_T^*$) | 0.375 | 0.375 | 0.375 | 0.375 | MV |
| Peak electric field ($E_P^*$) | 3.82 | 3.86 | 4.23 | 3.75 | MV/m |
| Peak magnetic field ($B_P^*$) | 7.09 | 6.9 | 7.69 | 6.85 | mT |
| $B_P^* / E_P^*$ | 1.86 | 1.79 | 1.82 | 1.83 | mT / (MV/m) |
| Non-Uniformity at 15 mm offset in x | 2.06 | 2.91 | 0.3 | 2.08 | % |
| Non-Uniformity at 15 mm offset in y | 2.23 | 3.04 | 1.1 | 2.19 | % |
| Stored Energy ($U^*$) | 0.19 | 0.18 | 0.17 | 0.17 | J |
| Geometrical factor ($G = QR_S$) | 119.7 | 115.0 | 108.5 | 152.9 | Ω |
| $[R/Q]_T$ | 312.2 | 315.7 | 336.4 | 331.1 | Ω |
| $R_T R_S$ | $3.7\times10^4$ | $3.6\times10^4$ | $3.7\times10^4$ | $5.1\times10^4$ | $\Omega^2$ |
| At $E_T^*$ = 1 MV/m | | | | | |

# Field Non-Uniformity

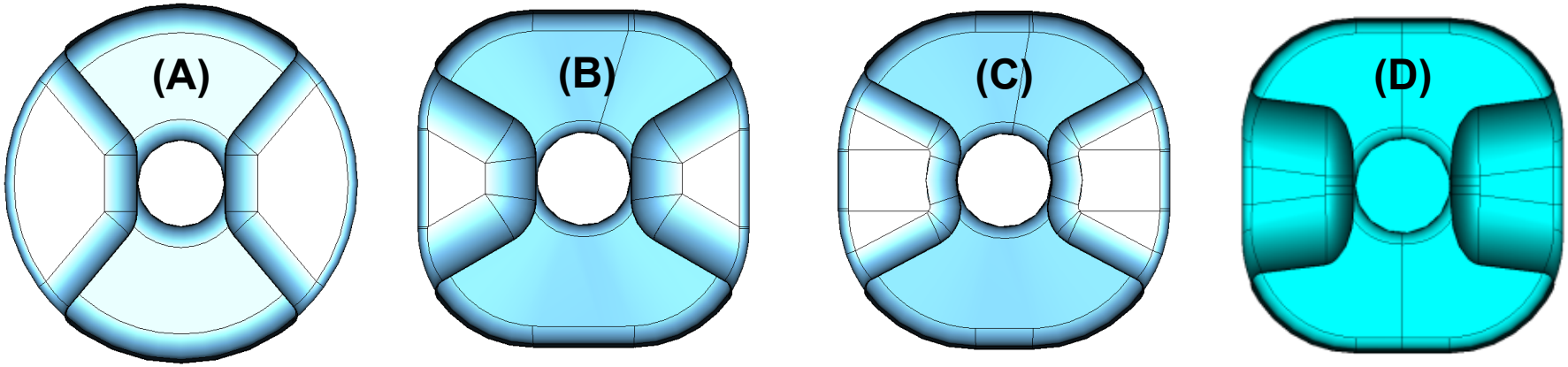


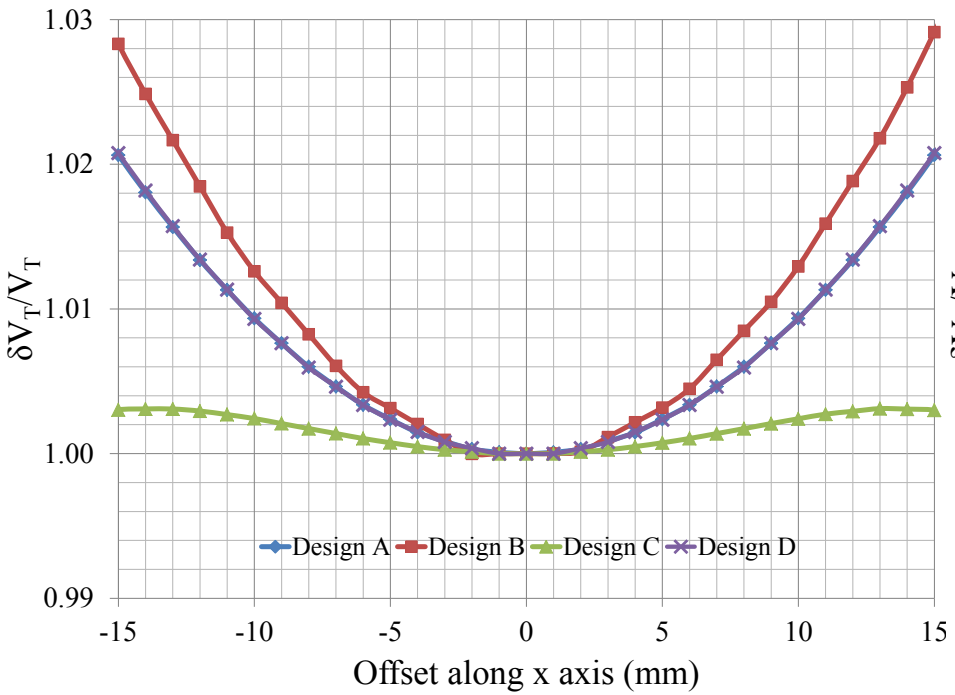


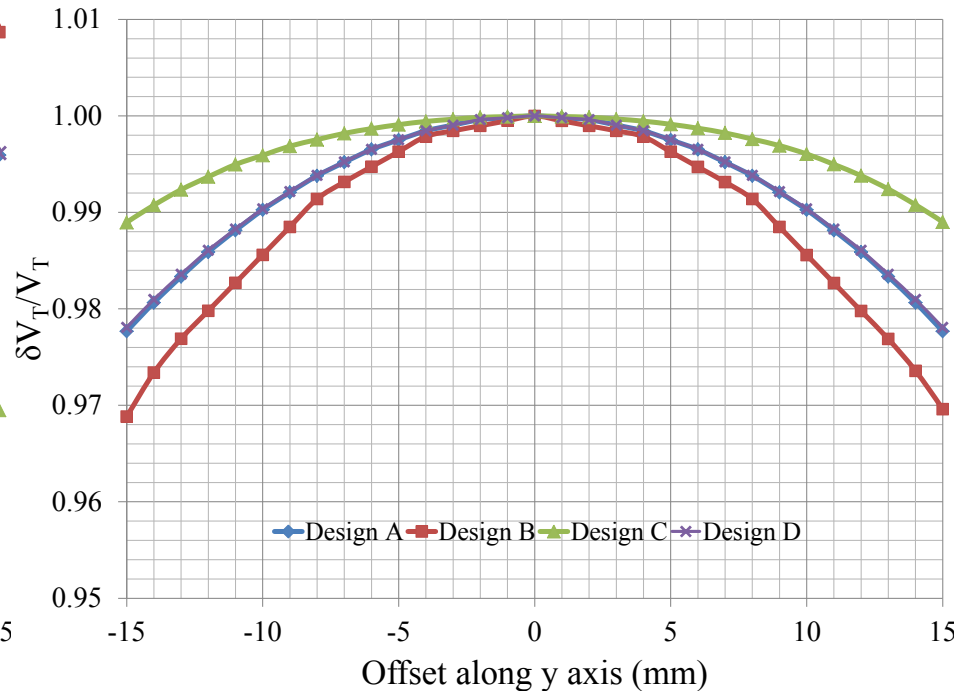

# HOM Properties

**Impedance Budget (LHC-CC10):- Longitudinal – 20 kΩ / Transverse – 0.4 MΩ/m**

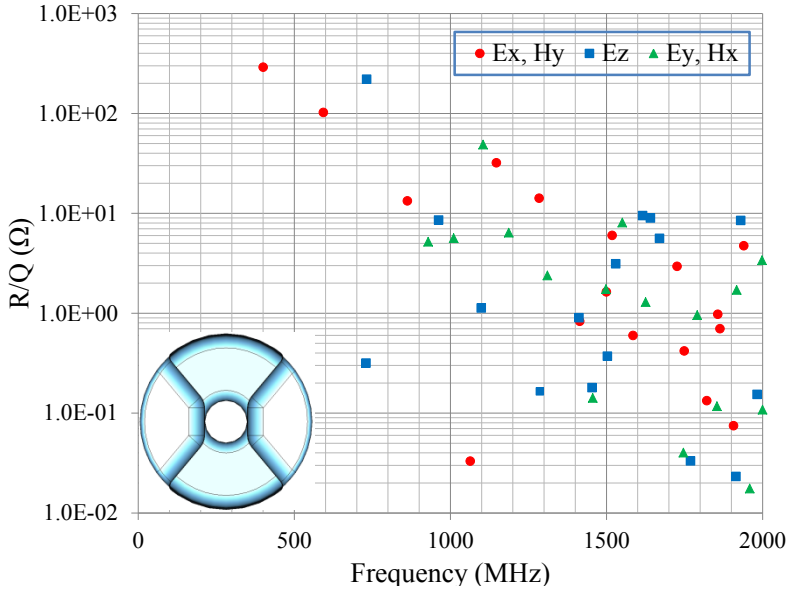


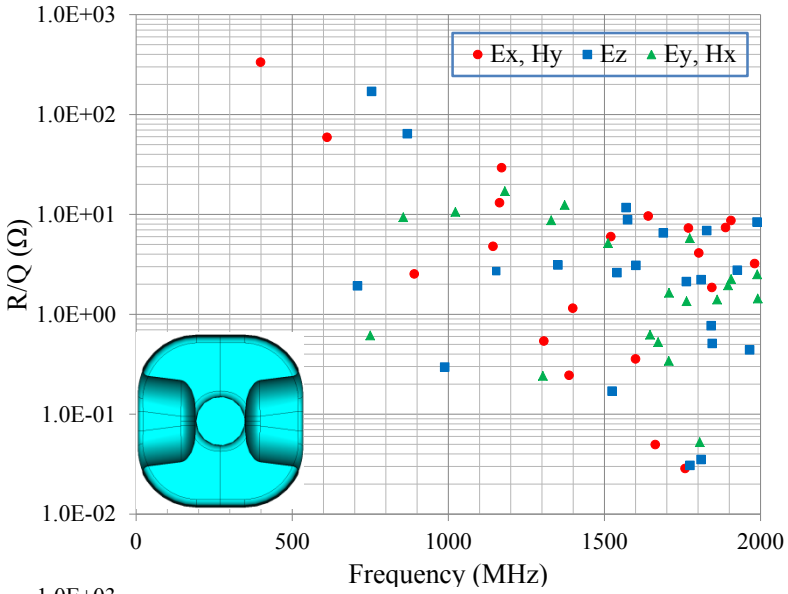


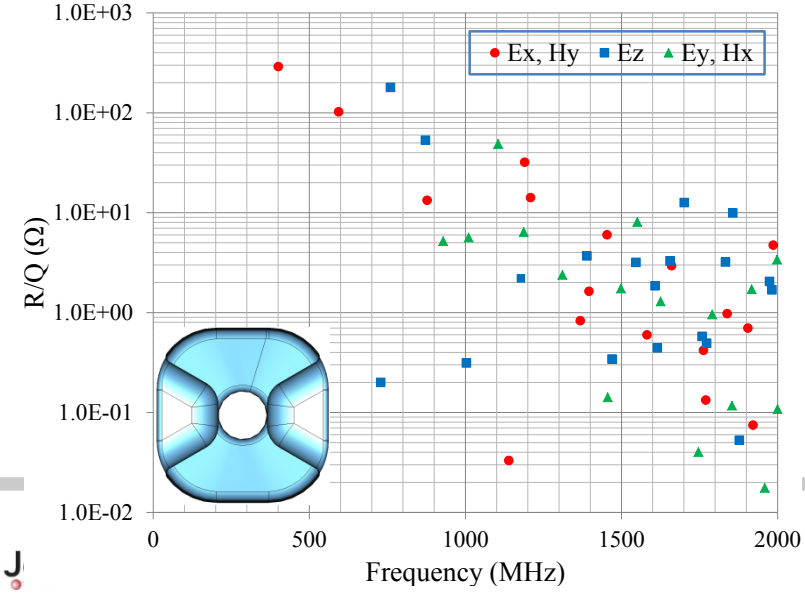


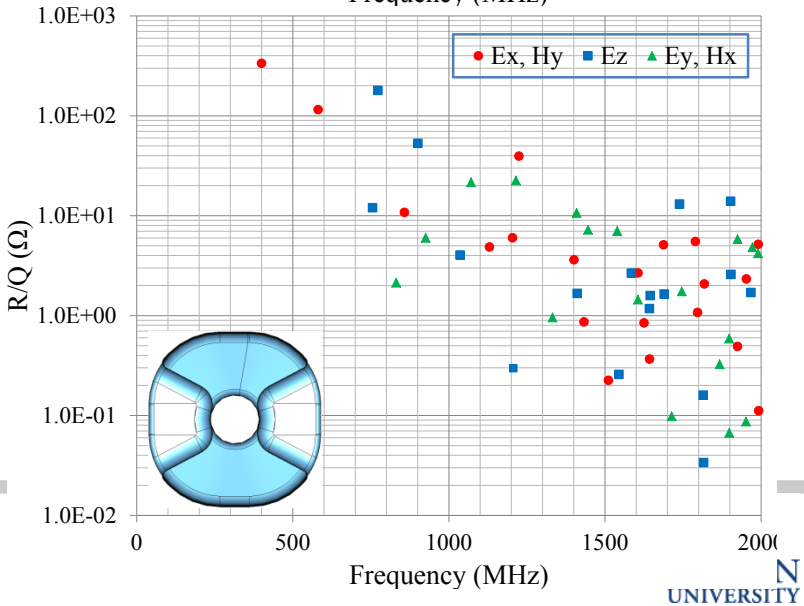

# Power Dissipation

- Surface resistance of Nb at 400 MHz
  - 4.5K: 95 nΩ→105 nΩ
  - 2K: 1.3 nΩ→10 nΩ

$$P = \frac{V^2}{(QR_s)(R/Q)} R_s$$

| Parameter | 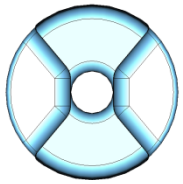 | 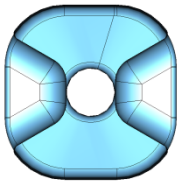 | 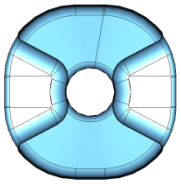 | 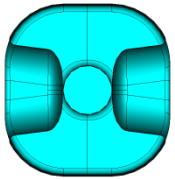 | Unit |
|---|---|---|---|---|---|
| Deflecting voltage ($V_T^*$) | 0.375 | 0.375 | 0.375 | 0.375 | MV |
| Peak electric field ($E_P^*$) | 3.82 | 3.86 | 4.23 | 3.75 | MV/m |
| Peak magnetic field ($B_P^*$) | 7.09 | 6.9 | 7.69 | 6.85 | mT |
| $B_P^* / E_P^*$ | 1.86 | 1.79 | 1.82 | 1.83 | mT / (MV/m) |
| $E_P$ at 3 MV | 30.6 | 30.9 | 33.8 | 30.0 | MV |
| $B_P$ at 3 MV | 56.7 | 55.2 | 61.5 | 54.8 | mT |
| $E_P$ at 5 MV | 51.3 | 51.5 | 56.4 | 50.0 | MV |
| $B_P$ at 5 MV | 94.5 | 92.0 | 102.5 | 91.3 | mT |
| $R_T R_S$ | $3.7\times10^4$ | $3.6\times10^4$ | $3.7\times10^4$ | $5.1\times10^4$ | $\Omega^2$ |
| $P$ at 4.5K at 3 MV / 5 MV | 25.5 / 70.9 | 26.3 / 72.9 | 25.5 / 70.9 | 18.5 / 51.5 | W |
| $P$ at 2K at 3 MV / 5 MV | 2.4 / 6.8 | 2.5 / 6.9 | 2.4 / 6.8 | 1.8 / 4.9 | W |
| At $E_T^*$ = 1 MV/m | | | | | |

# Cryomodule for LHC Crab Conceptual Design

- Niowave and ODU have received an SBIR Phase-I project dedicated for design and construction of a cryomodule for testing LHC crabbing cavity
- Goal is to accommodate all considered options of the crabbing cavity for the HiLumi LHC upgrade
- Phase-I includes the comparative design of the proposed device, the Phase-II will include manufacturing and testing of the selected option
- Proposed cryomodule would include:
  - Prototype cavities that meet the LHC electromagnetic, mechanical, and dimensional requirements
  - Power couplers
  - HOM couplers
  - Frequency tuners
  - Realistic tunnel geometry and accommodate the twin beam chambers (84 mm diameter) in close proximity (194 mm center-to-center)
  - Allow positioning of the cavity in both, horizontal and vertical deflection configurations
  - Adequate thermal and magnetic shielding for 4 K or 2 K operation

# Cryomodule for LHC Crab Conceptual Design

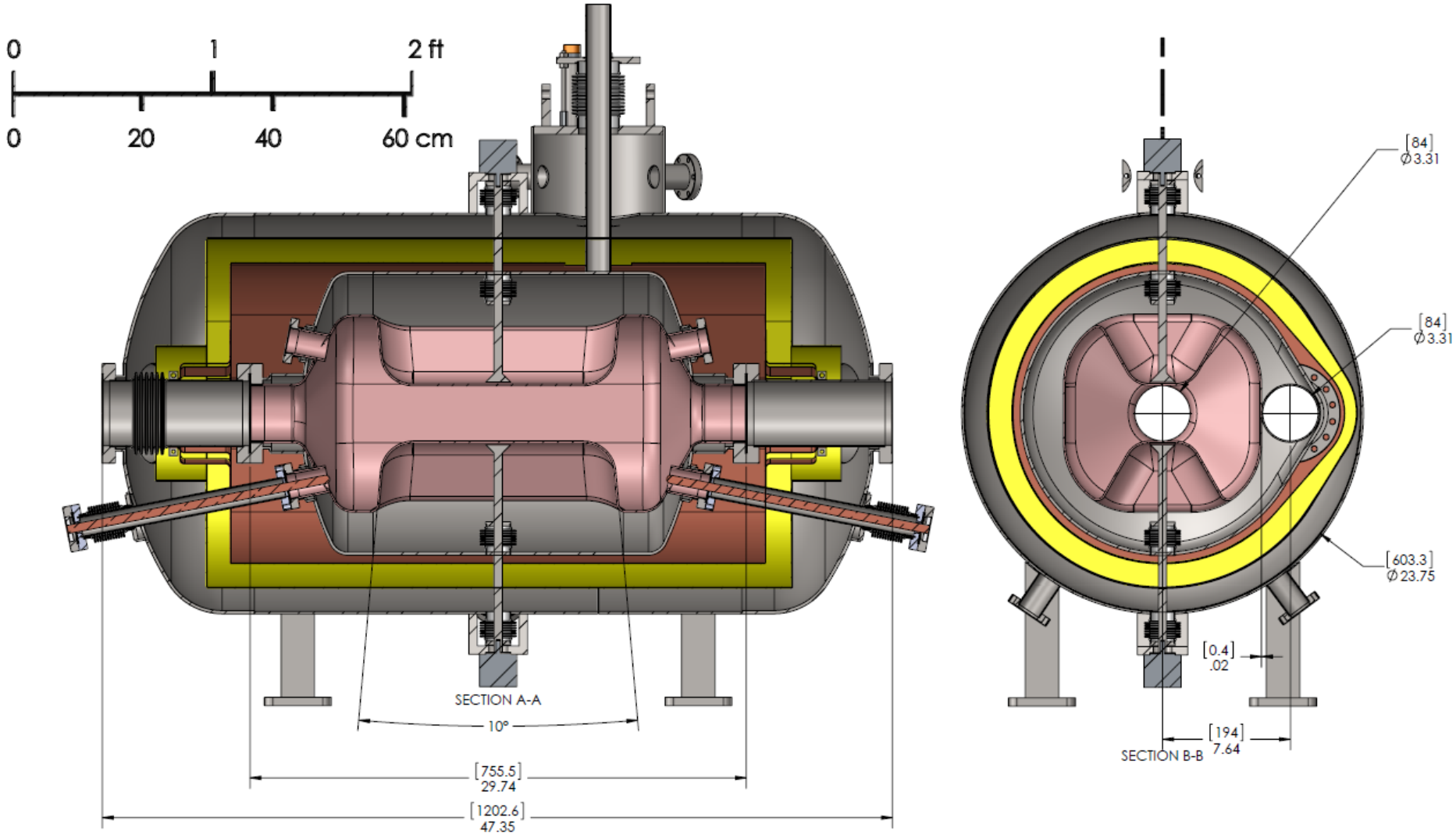

# Next Steps

- Test “proof of concept” cavity
- Design and testing of prototype beam line suitable cavity and ancillary
  - rf design
    - Appropriate dimensions
    - Use genetic algorithm
  - Fundamental power coupler and higher order mode couplers
  - Thermal/Mechanical analysis and engineering design
  - Multipacting analysis
  - Beam dynamics study, multipole expansion
  - Frequency tuners (coarse and fine)
  - LLRF and microphonics
  - Fabrication and testing
  - Cryostat design

# Publications

- PRST-AB
  - Beam Dynamics Studies for Transverse Electromagnetic Mode-type RF Deflectors – Phys. Rev. ST Accel. Beams **15**, 022001 (2012) - S. Ahmed, et.al.
- PAC 2011 – NewYork, USA
  - Design of Superconducting Parallel-bar Deflecting/Crabbing Cavities with Improved Properties – J.R. Delayen, S.U. De Silva
  - Fundamental and HOM Coupler Design for the Superconducting Parallel-Bar Cavity – S.U. De Silva, J.R. Delayen
  - Multipacting Analysis of the Superconducting Parallel-bar Cavity – S.U. De Silva, J.R. Delayen
  - Beam Dynamics Studies of Parallel-Bar Deflecting Cavities – S. Ahmed, et.al.
- SRF 2011 – Chicago, USA
  - Compact Superconducting Cavities for Deflecting and Crabbing Applications – J.R. Delayen – Inivted Talk
  - Designs of Superconducting Parallel-Bar Deflecting Cavities for Deflecting/Crabbing Applications – J. R. Delayen, S.U. De Silva
  - Analysis of HOM Properties of Superconducting Parallel-Bar Deflecting/Crabbing Cavities – S.U. De Silva, J.R. Delayen
  - Mechanical Study of Superconducting Parallel-Bar Deflecting/Crabbing Cavities – H. Park, S.U. De Silva, J. R. Delayen
- IPAC 2011 – San Sebastián, Spain
  - Design of Superconducting Parallel-bar Deflecting/Crabbing Cavities – J.R. Delayen, S.U. De Silva
  - Crab Crossing Schemes and Studies for Electron Ion Collider – S. Ahmed, et.al.

# Publications in Preparation

- PRST-AB
  - Evolution and Properties of Parallel-Bar Deflecting/Crabbing Cavities – S.U. De Silva, J.R. Delayen

- IPAC 2012 – New Orleans, USA
  - Design and Development of Superconducting Parallel-bar Deflecting/Crabbing Cavities – S.U. De Silva, J.R. Delayen
  - Characteristics and Fabrication of a 499 MHz Superconducting Deflecting Cavity for the Jefferson Lab 12 GeV Upgrade – H. Park, S.U. De Silva, J. R. Delayen
  - Engineering of a Superconducting 400 MHz Crabbing Cavity for the LHC HiLumi Upgrade – D. Gorelov, T. Grimm (Niowave, Inc., Lansing, Michigan), S.U. De Silva, J.R. Delayen
  - RF Modeling Using Parallel Codes ACE3P for the 400-MHz Parallel-Bar/Ridged-Waveguide Compact Crab Cavity for the LHC HiLumi Upgrade – Z. Li, L. Ge (SLAC, Menlo Park, Ca*l*ifornia), J.R. Delayen, S.U. De Silva
  - Simulation of a TEM-mode Crab Cavity in the SPS – H.J. Kim, T. Sen (Fermilab, Batavia), K. Li (Stony Brook University, Stony Brook)
  - Impedance Budget for MEIC Electron Ring – S. Ahmed et.al.

- LINAC 2012 – Tel Aviv, Israel
  - Compact Superconducting Crabbing and Deflecting Cavities – S.U. De Silva – Invited Talk
  - Multipole Field Effects of Parallel-Bar Deflecting/Crabbing Cavities – S.U. De Silva, J.R. Delayen

# Parting Words

- ODU-SLAC collaboration in place and is fruitful
  - Electromagnetic design
  - Multipacting analysis
  - HOM analysis
  - Coupler design
- ODU-Niowave collaboration on a number of projects has been beneficial (Spoke Cavities, Deflecting/Crabbing Cavities, Small Accelerators)
  - Cavity engineering and fabrication
  - Cryomodule development
- Three deflecting/crabbing structures are under fabrication and testing (499 MHz, 400 MHz and 750 MHz)
- LARP is funding a postdoc at ODU (Julius Nfor, started April 1st, 2012) to support LHC High-Lumi program
- We are ready to design and develop next cavity and cryomodule
  - Need for a list of parameters and specifications

# Acknowledgements


- HyeKyoung Park (JLab/ODU)
- Zenghai Li (SLAC)
- Lixin Ge (SLAC)
- Terry Grimm (Niowave)
- Dmitry Gorelov (Niowave)
- Alejandro Castilla (ODU/JLab)


ස්තූතියි

# Pressure Measurements
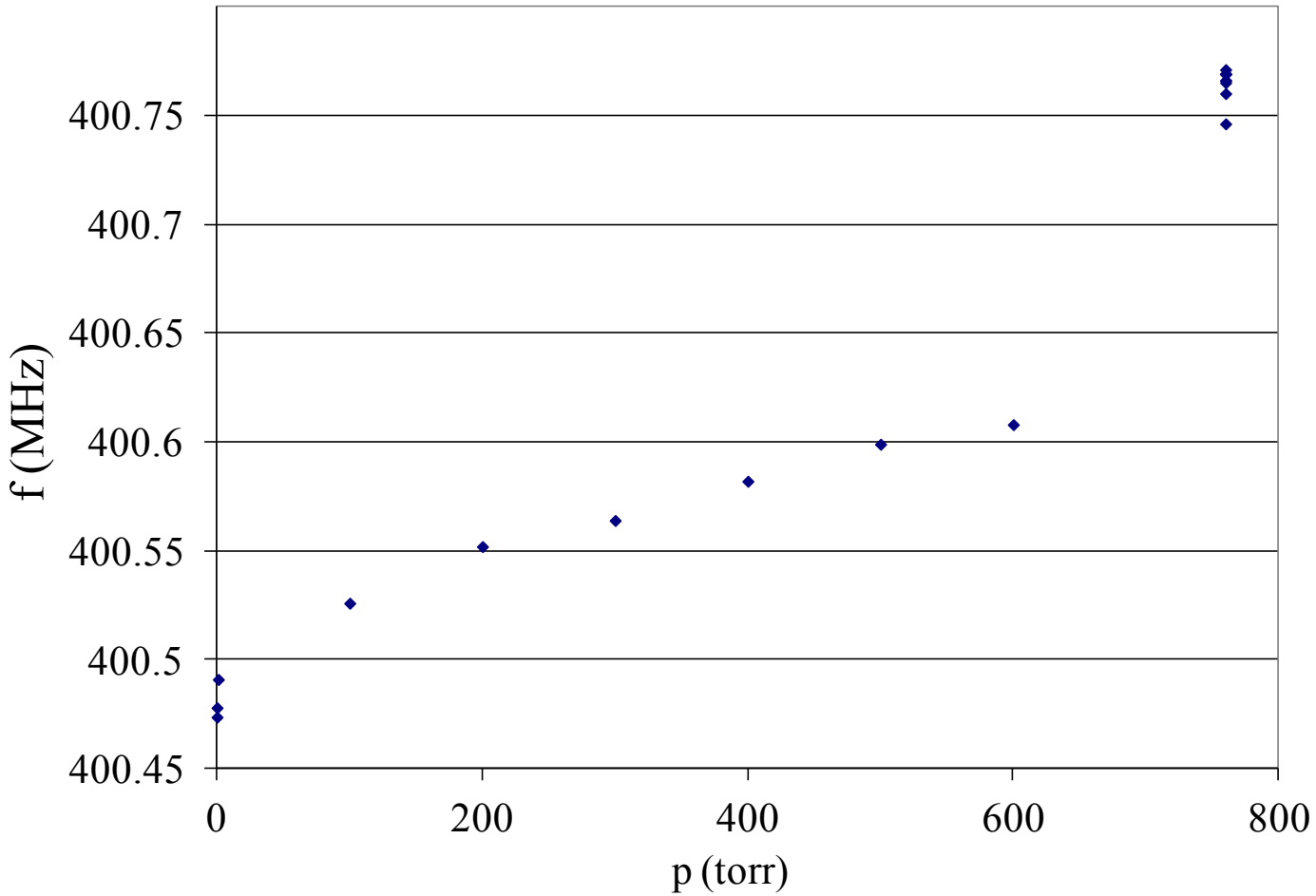
- Frequency measurement with cavity evacuation