Tracking Requirements in Rare K Decay Experiments

Jack Ritchie
University of Texas at Austin

Fundamental Physics at the Intensity Frontier, Heavy Quarks report, arXiv: 1205.2671

Observable	SM Theory	Current Expt.	Future Experiments
$\mathcal{B}(K^+ \to \pi^+ \nu\overline{\nu})$	7.8×10^{-11}	$1.73^{+1.15}_{-1.05} \times 10^{-10}$	~10% measurement from NA62 ~5% measurement from ORKA ~2% with Project X
$\mathcal{B}(K_L^0 \to \pi^0 \nu\overline{\nu})$	2.43×10^{-11}	$< 2.6 \times 10^{-8}$	1st observation from KOTO ~5% measurement with Project X
$\mathcal{B}(K_L^0 \to \pi^0 e^+ e^-)_{SD}$	1.4×10^{-11}	$< 2.8 \times 10^{-10}$	~10% measurement with Project X
$\mathcal{B}(K_L^0 \to \pi^0 \mu^+ \mu^-)_{SD}$	3.5×10^{-11}	$< 3.8 \times 10^{-10}$	~10% measurement with Project X
$\lvert P_T \rvert$ in $K^+ \to \pi^0 \mu^+ \nu$	$\sim 10^{-7}$	< 0.0050	< 0.0003 from TREK < 0.0001 with Project X
$R_K = \Gamma(K_{e2})/\Gamma(K_{\mu 2})$	2.477×10^{-5}	$(2.488 \pm 0.080) \times 10^{-5}$	$\pm 0.054 \times 10^{-5}$ from TREK $\pm 0.025 \times 10^{-5}$ with Project X
$\mathcal{B}(K_L^0 \to \mu^\pm e^\mp)$	$< 10^{-25}$	$< 4.7 \times 10^{-12}$	$< 2 \times 10^{-13}$ with Project X

Table 2-2. *A summary of the reach of current and proposed experiments for some key rare kaon decay measurements, in comparison to Standard Model theory and the current best experimental results.*

General Tracking Requirements

- Obvious requirements (to be quantified)
  - High rate capability
  - Good resolution (small non-Gaussian tails)

- Equally important
  - Low mass (backgrounds result directly from the material in the tracker and can only be controlled by reducing the material

  $\Rightarrow$ often requires operation in vacuum

Benchmark Experiments

- $K^+ \rightarrow \pi^+ \nu \bar{\nu}$
- $K_L \rightarrow \mu e$
- $K_L \rightarrow \pi^0 e^+ e^-$

Status of $K^+ \rightarrow \pi^+ \nu \bar{\nu}$

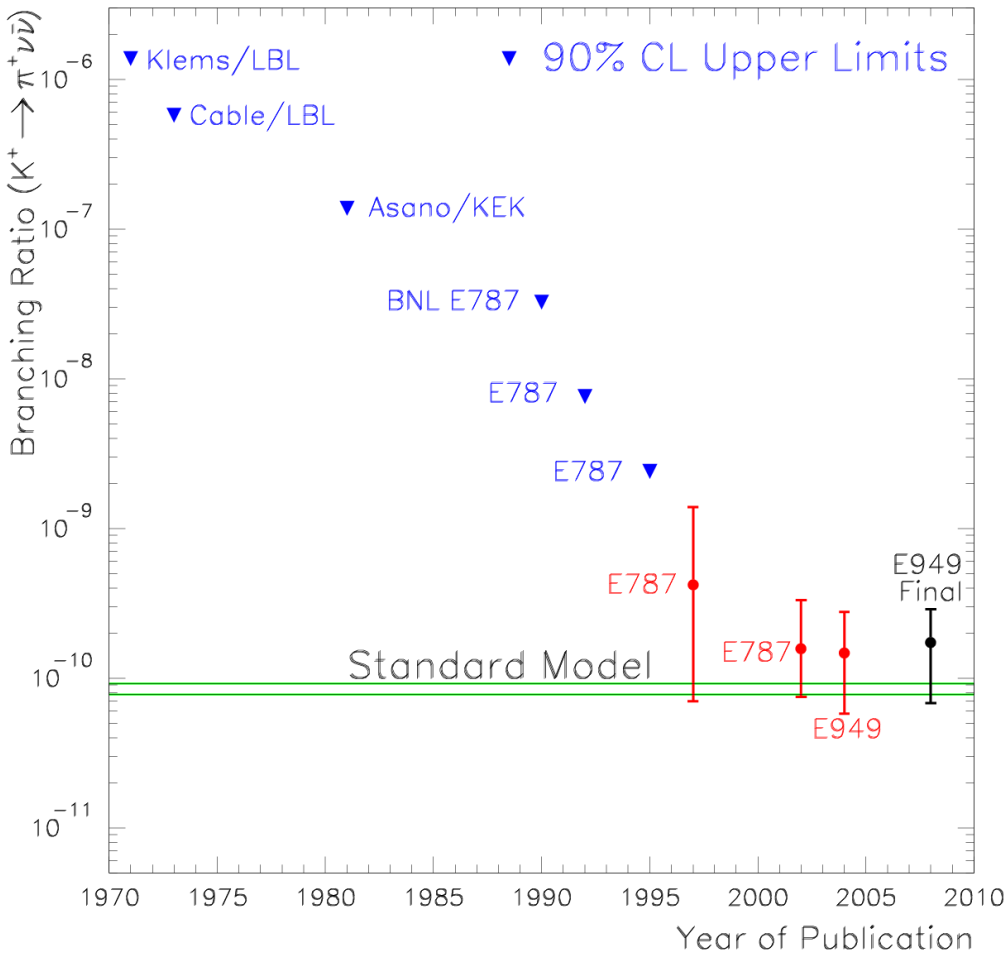

- BF $\cong 1 \times 10^{-10}$
- BNL E787/949 observed 7 events in "stopped K" experiment
- ORKA proposal at FNAL to use same method
- NA62 underway at CERN "decay in flight"
- Before NA62, CKM was proposed at FNAL to use decay-in-flight with separated K^+ beam

$K^+ \rightarrow \pi^+\nu\bar{\nu}$ Backgrounds

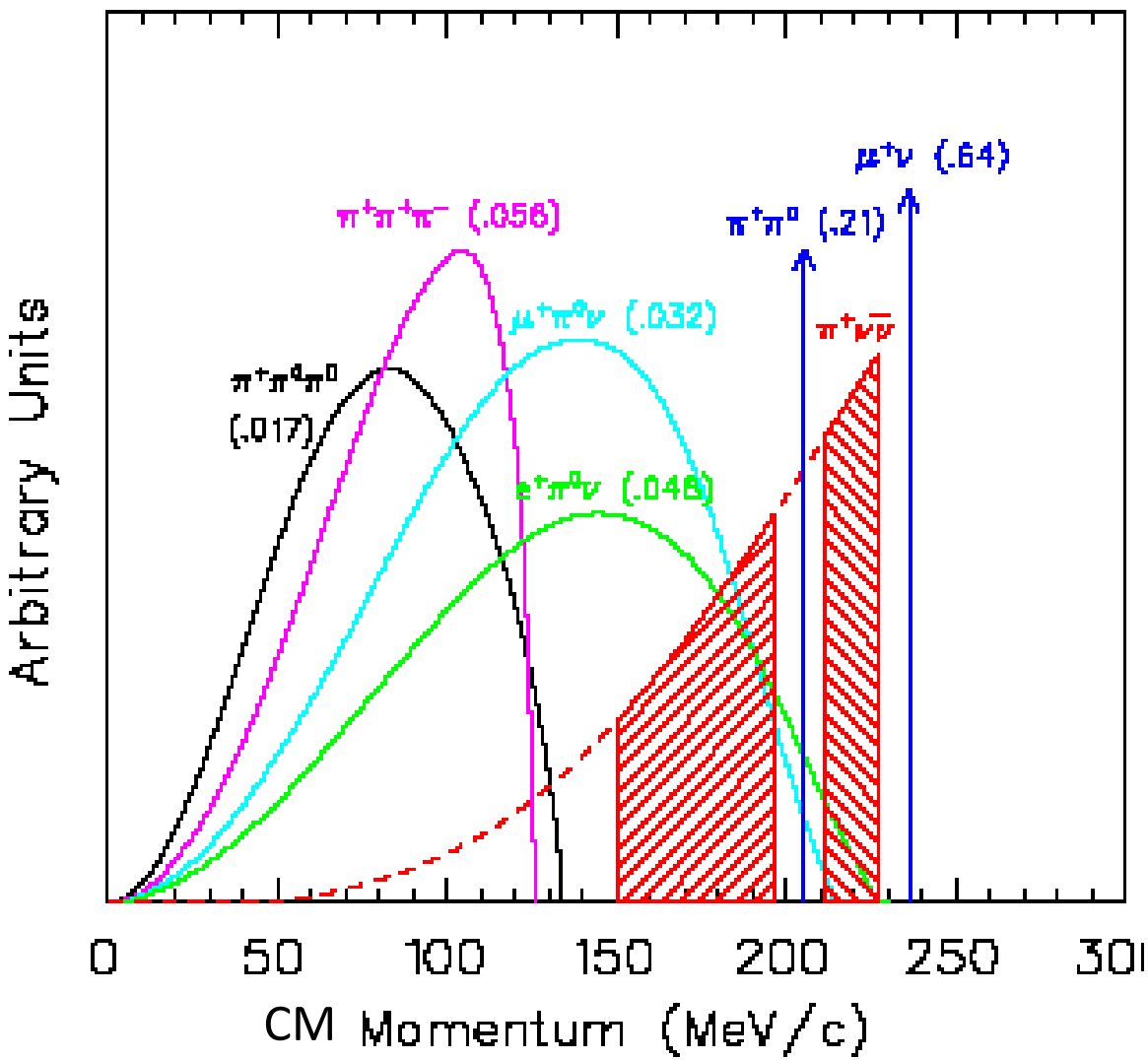

- Rejection from:
  - Kinematics (tracking)
  - Particle ID (decay chain $\pi \rightarrow \mu \rightarrow e$)
  - Photon veto (rejection of π^0)

Note: for stopped K, p = 0. It is **not** key that the CM is at rest, but that the initial momentum is fixed.

ORKA Detector

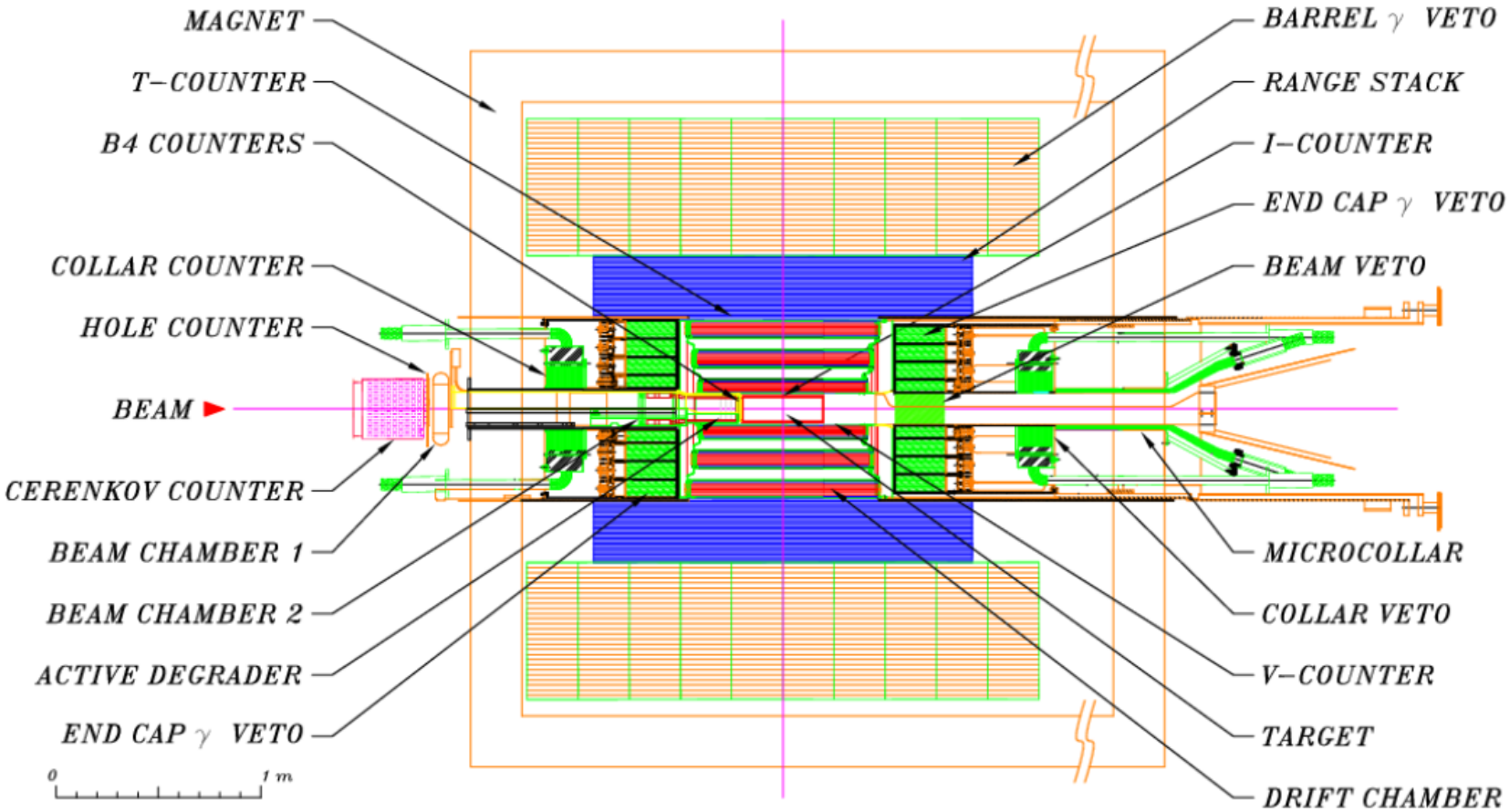

ORKA Drift Chamber

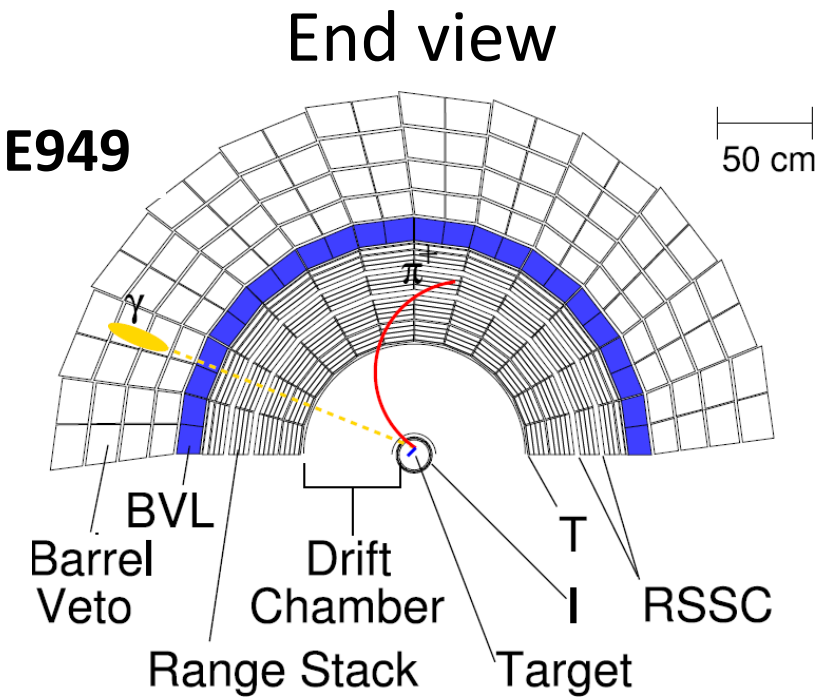

- Based on E787/E949 UTC "ultrathin chamber"
  - 0.2% X_0 in tracking volume
  - Total 3% X_0 including support tubes
  - $\sigma_p/p = 0.009$ (150-250 MeV/c)
- B = 1.3 T (solenoidal field)
- ~2000 channels
- Rates ~ 150 kHz per wire

Talk by Toshio Numao in Monday morning parallel session

$K^+ \rightarrow \pi^+\nu\bar{\nu}$ Decay in Flight [1]

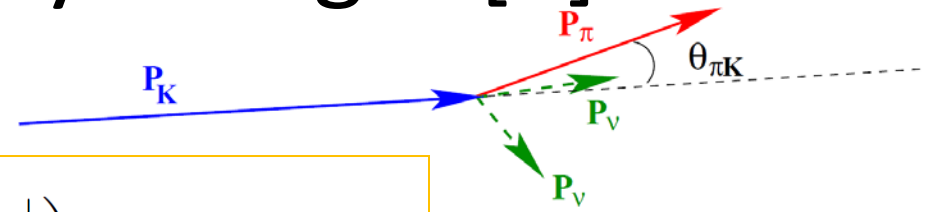

$$m^2_{miss} \simeq m^2_K \left(1 - \frac{|P_\pi|}{|P_K|}\right) + m^2_\pi \left(1 - \frac{|P_K|}{|P_\pi|}\right) - |P_K||P_\pi|\theta^2_{\pi K}$$

- M_{miss} provides the same info as CM p_π
- The beam K^+ momentum and direction must be measured
  - $\Rightarrow$ tracking in beam

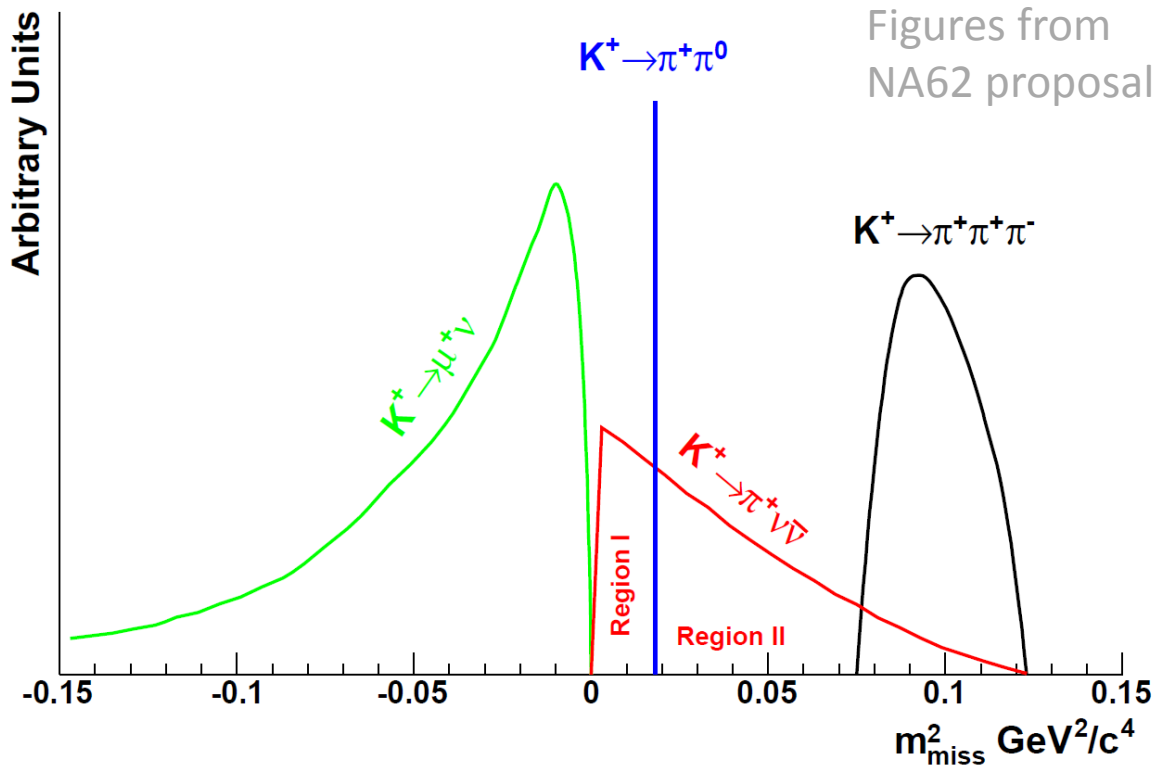

Figures from NA62 proposal

$K^+ \rightarrow \pi^+\nu\bar{\nu}$ Decay in Flight [2]

- Background rejection from
  - Muon ID (to reject $K^+ \rightarrow \mu^+\nu$)
  - Hermetic Photon Veto (to reject $K^+ \rightarrow \pi^+\pi$)
  - Kinematic reconstruction (to avoid both)
- For the tracking system, the requirement is to measure M_{miss} precisely.
  - Mis-measurement arises from scattering in material traversed by the K^+ or the π^+
  - Most material can be eliminated by putting everything in vacuum, but the material in the tracker itself is a source of background

NA62 Layout

Scatters in the last beam-tracker or first straw tracker cause $\theta_{\pi K}$ mis-measurement

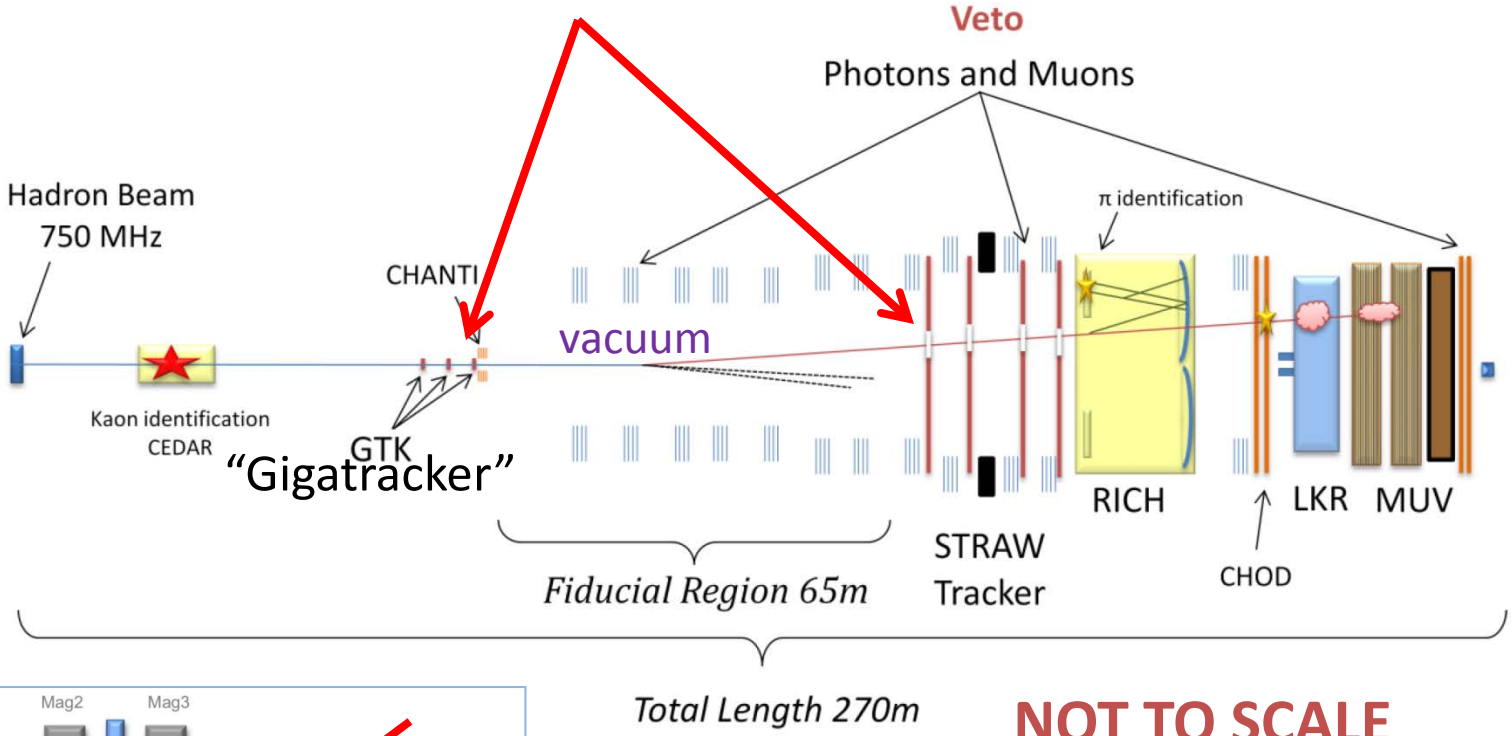

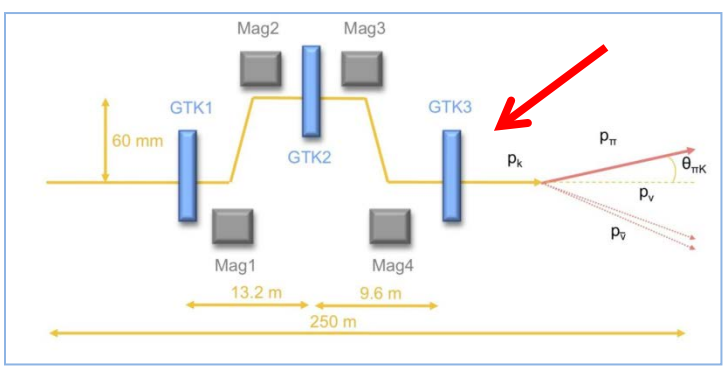

NOT TO SCALE

Figures from NA62 TDR

NA62 beam tracking

- 75 GeV K^+ beam, from 400 GeV protons on Be
  - High energy matched to SPS
  - Benefits photon veto
  - Makes separated beam unfeasible (π:K:p $\cong$ 12:1:4)
  - About 6% of charged flux is K^+
- Beam Intensity $\cong$ 750 MHz $\Rightarrow$ Gigatracker
- Gigatracker
  - Rates 1.3 MHz/mm^2 near center
  - Requires good position and time resolution
  - Silicon pixel detector (goal < 0.5% X_0 per station)

Talk by Bob Velghe in Saturday afternoon session

$K_L \rightarrow \mu e$ in BNL E871

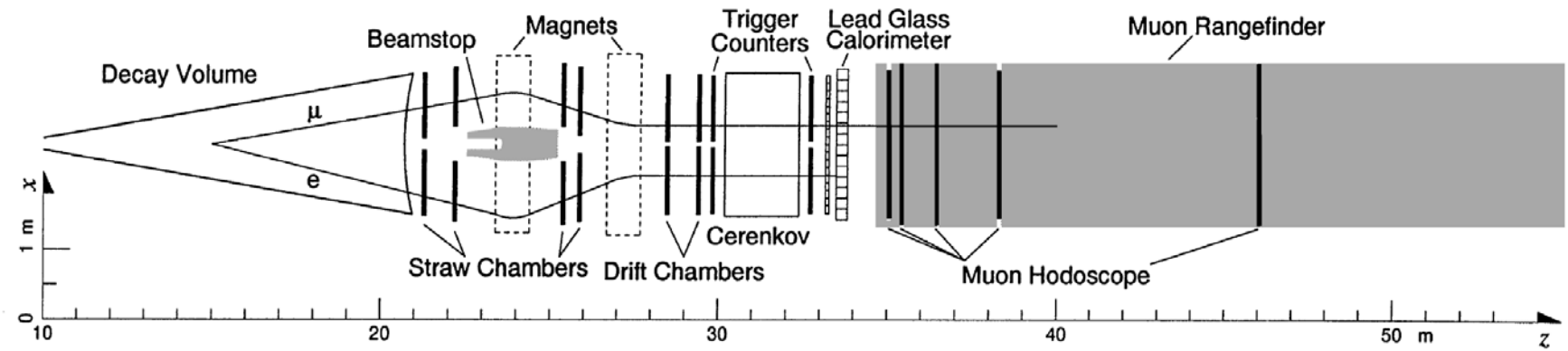

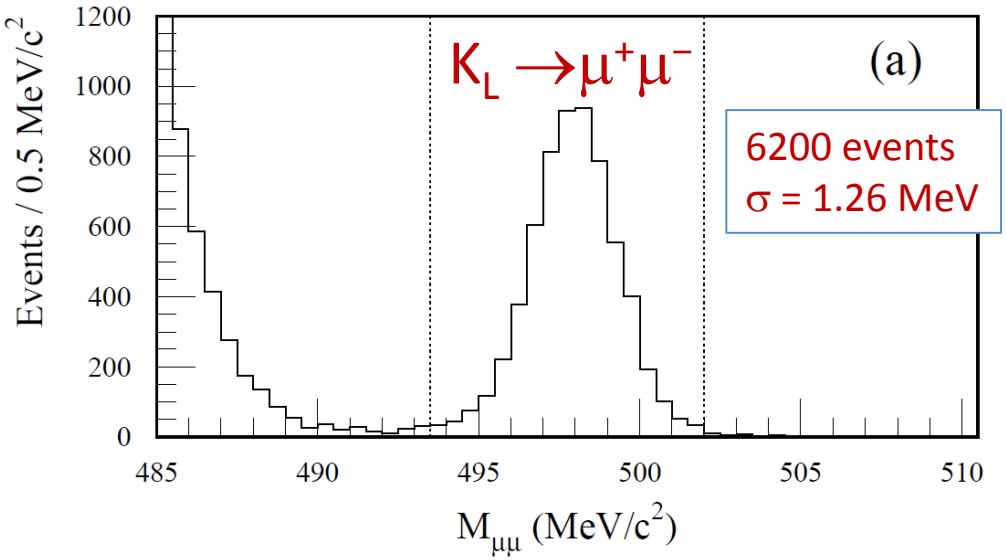

- $B(K_L \rightarrow \mu e) < 4.7 \times 10^{-12}$
- NOT background limited
  - Reduced background to 0.1 event with cuts
- $B(K_L \rightarrow \mu\mu) = (7.18 \pm 0.17) \times 10^{-9}$
- First observation of $K_L \rightarrow e^+e^-$
  - 4 events
- $B(K_L \rightarrow ee) = 8.7^{+5.7}_{-4.1} \times 10^{-12}$

BNL E871 Straws

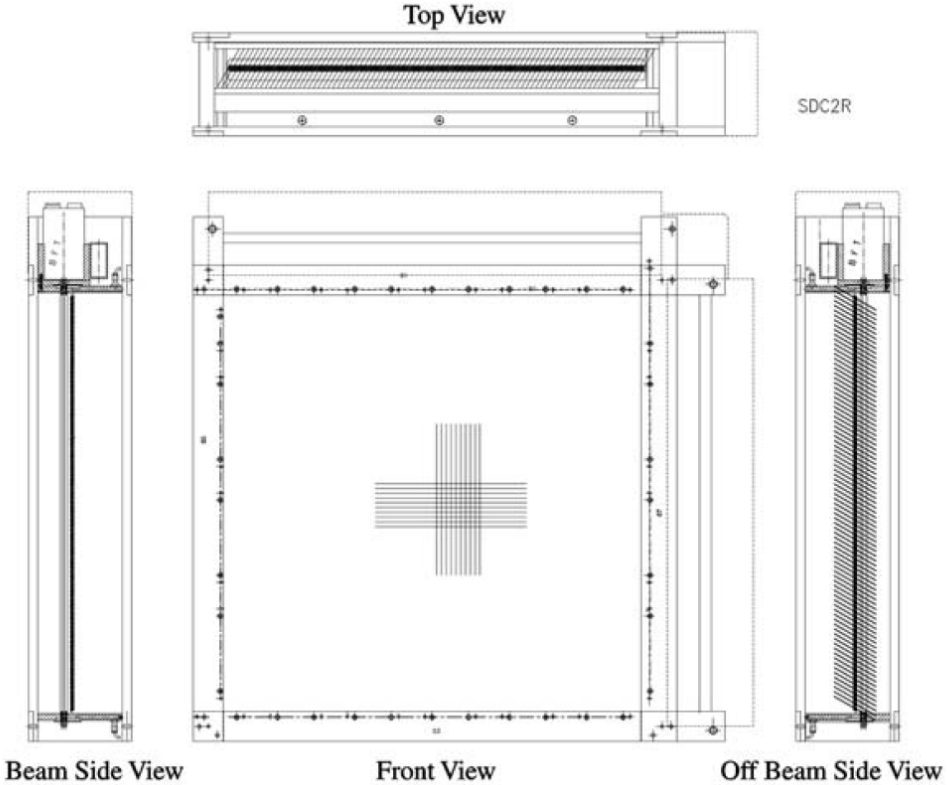

Effective radiation thickness of a straw drift chamber with $3x$ and $2y$ layers (in units of % of X_0)

	Mean thickness (cm)	Layers	X_0 (cm)	Radiation thickness (% X_0)
Mylar windows	0.001270	2	28.7	0.00885
Helium	21.434	1	529888.0	0.00405
Mylar straw	0.00798	5×1.2[a]	28.7	0.16683
Copper (1000 Å)	0.000031	5	1.430	0.01084
CF_4 (50%)	0.3980	2.5	9313.0 [9]	0.01068
C_2H_6 (50%)	0.3980	2.5	34035.0	0.00292
Tungsten wire	0.0000062	5	0.350	0.00886
Epoxy	0.000150	1	35	0.00043
Total				0.21346

[a] The straw intra-wall adhesive layer is accounted for by multiplying the number of straw layers (5) by 1.2.

BNL E871 Straws

1 MHz

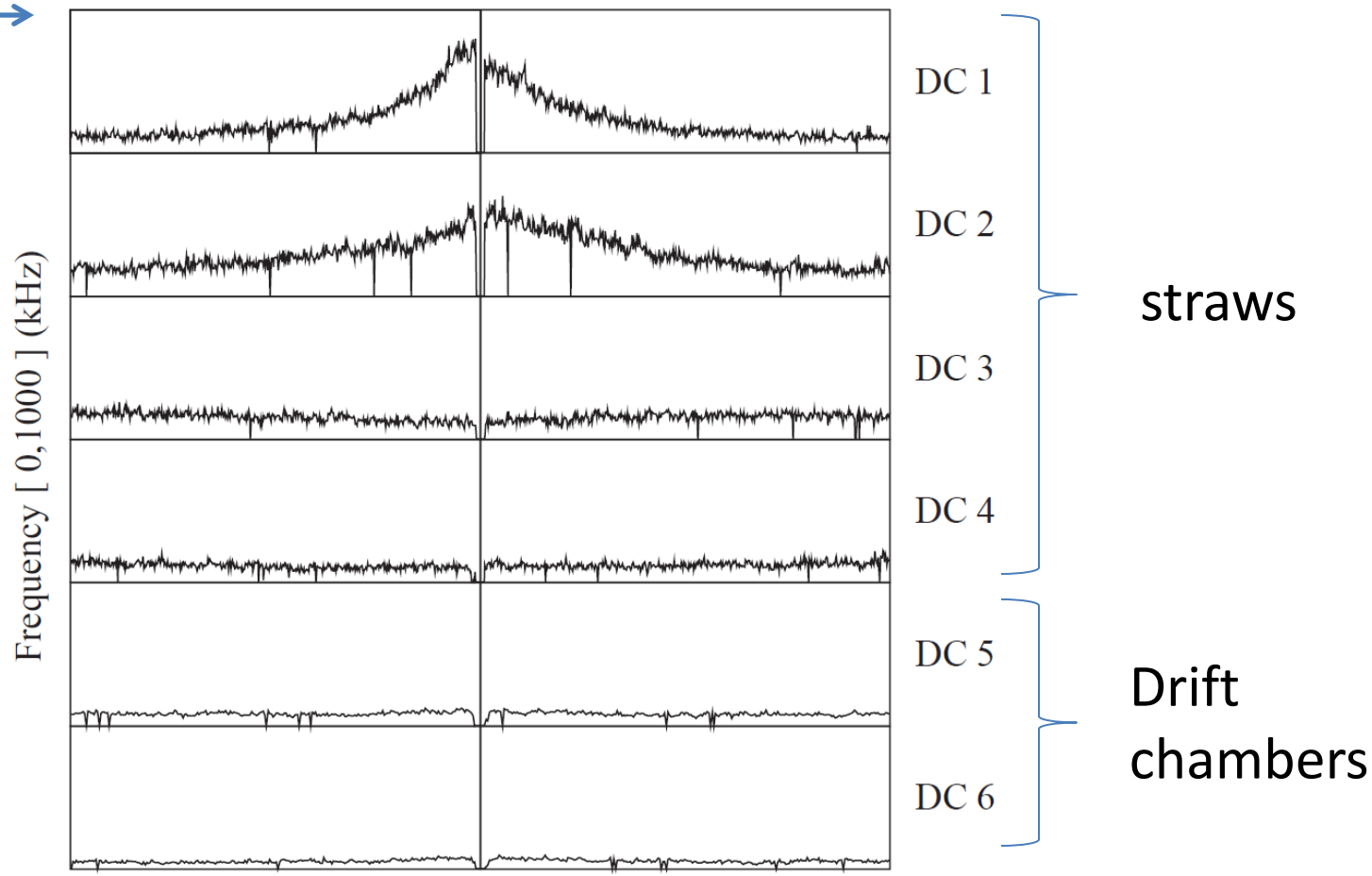

Fig. 17. Tracking chamber hit rates. Hit rate vs. wire number for a random trigger at 15 Tp.

$K_L \rightarrow \mu e$ backgrounds

- Backgrounds come from $K_L \rightarrow \pi e \nu$ (Ke3)
- $\pi \rightarrow \mu\nu$ in decay volume or spectrometer
  - Multiple measurements of μ momentum
  - Good track reconstruction (χ^2 cuts)
  - Transverse momentum = 0
  - Maximum $M_{\mu e} = M_K - 8$ MeV

Precise tracking required

- Double mis-ID ($\pi \rightarrow e$ and $e \rightarrow \mu$)
  - defeats max $M_{\mu e}$
- Accidentals (Ke3 + Kμ3) close in space and time
  - Extra tracks provide additional rejection, but π's may not reach spectrometer

$K_L \rightarrow \mu e$ backgrounds

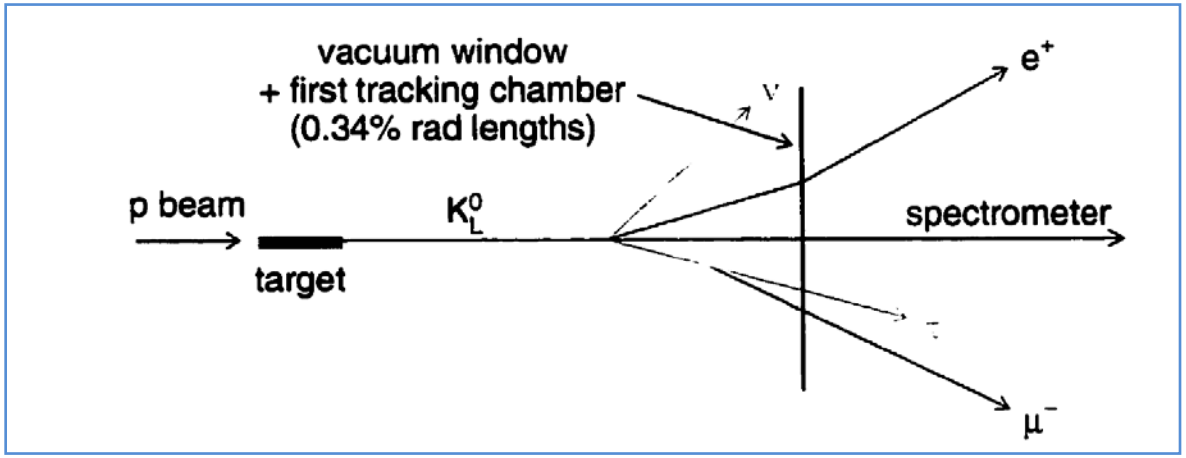

Dominant contribution from electron elastic scattering in vacuum window and 1st straw tracker.

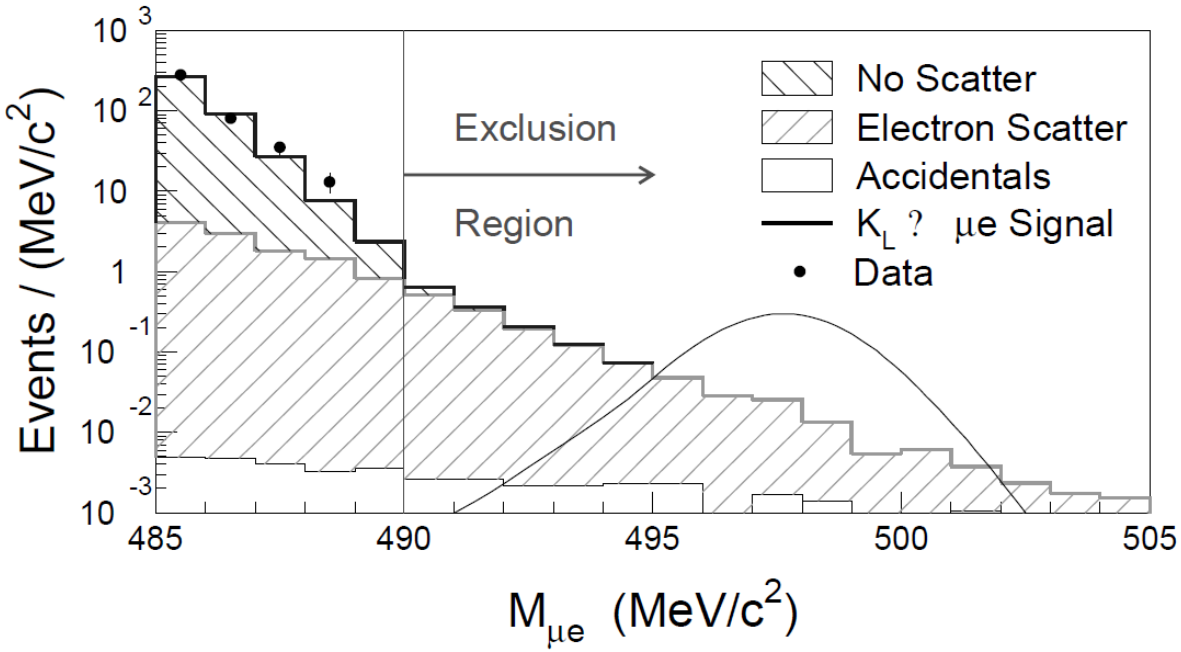

$K_L \rightarrow \mu e$ in BNL E871

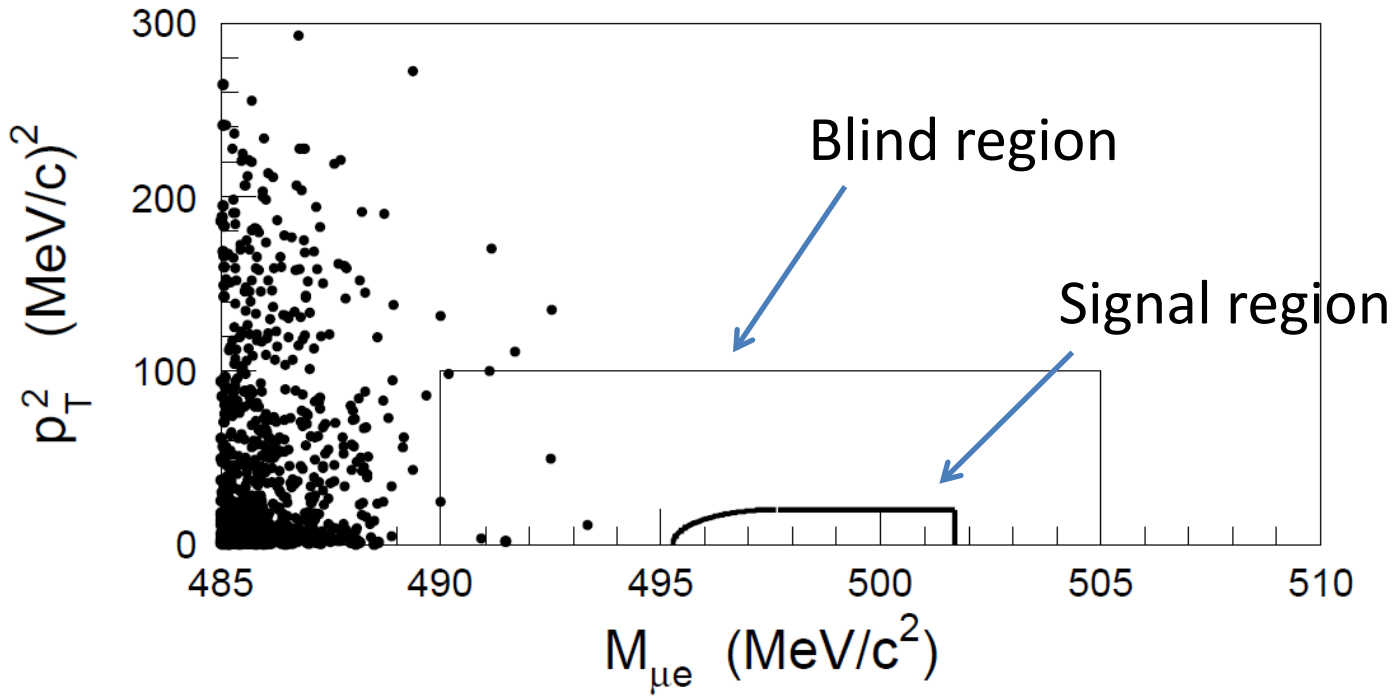

$B(K_L \rightarrow \mu e) < 4.7 \times 10^{-12}$

BNL E871 was limited by beam intensity and running time.

Project X ?

$K_L/K_S \to \pi^0 e^+ e^-$ Interference

- $K_L \to \pi^0 e^+ e^-$ probes same direct CP violating physics as $K_L \to \pi^0 \nu\bar{\nu}$ not as "clean"
  - Direct CP violating amplitude proportional to $\mathrm{Im}(V_{td}V^*_{ts})$
  - Similar size CP violating amplitude from K_L-K_S mixing
  - Background from $K_L \to e^+e^- \gamma\gamma$
  - Complements $K_L \to \pi^0 \nu\bar{\nu}$ and an independent check

- Do-able at Project X ?
  - Only work so far by H. Nguyen for 2009 Project X workshop
  - Sufficient beam intensity, but a challenging detector problem; needs study

$K_L/K_S \rightarrow \pi^0 e^+ e^-$ Interference [2]

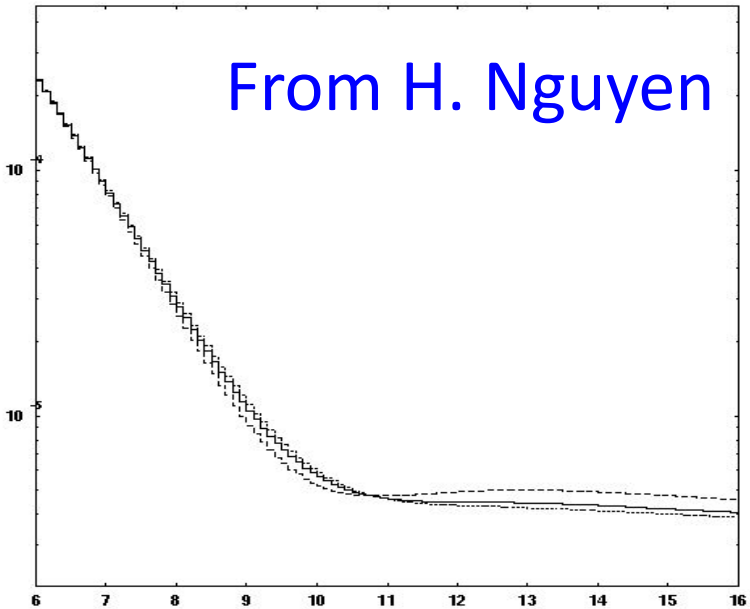

Number of τ_S lifetimes from target

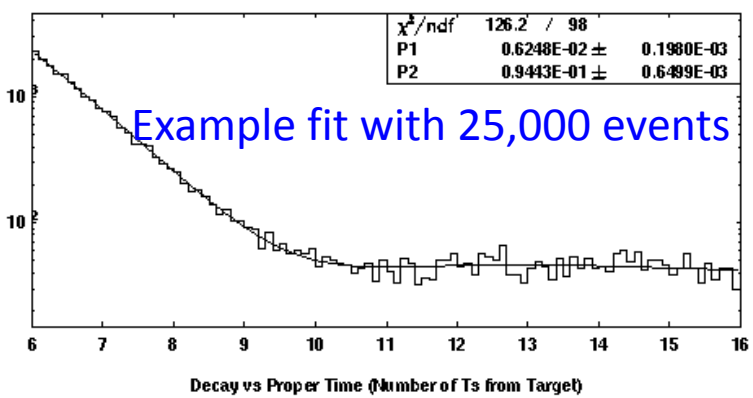

Assumes - 2.6 GeV protons
- thin ($\lambda=10^{-3}$) target
- 5% detector acceptance

Concludes – Measurement of $\mathrm{Im}(V_{ts}V^*_{td})$ to ±0.10 requires about 25K events between $6\tau_S$ and $16\tau_S$
- requires ~ 10^{23} protons on target

Possible with 6×10^{15} p/s × 3×10^7 s = 2×10^{23} p/yr

Detector Length Considerations ($c\tau_S$ = 2.6 cm)

P_K (GeV)	β	γ	$Z(6\tau_S)$	$Z(16\tau_S)$
0.3	0.51	1.17	18.3 cm	48.6 cm
1.0	0.89	2.23	34.7 cm	92.7 cm

⇒ Compact detector.
Tracking requirements? (calorimetry too)
Is this do-able? How?
Wide open topic.

Summary

- Tracking requirements of Project X rare K decay experiments have not been studied yet.
  - There are wide open problems to work on.
- Requirements are measurement specific, but rates near 1 MHz/channel are likely, and precise measurements (<100μm), low-mass (<0.25%X_0), and operation in vacuum will be needed.
- Non-gaussian resolution effects are dangerous.
- When considering scattering in material, multiple scattering is not enough. Hard scatters are more important, including hadronic and electromagnetic elastic scatters.