n-nbar at ILL

Dirk Dubbers
U. Heidelberg

1. Introduction

Institut Laue-Langevin, Grenoble

Highway Grenoble - Lyon

ESRF

ILL Instruments

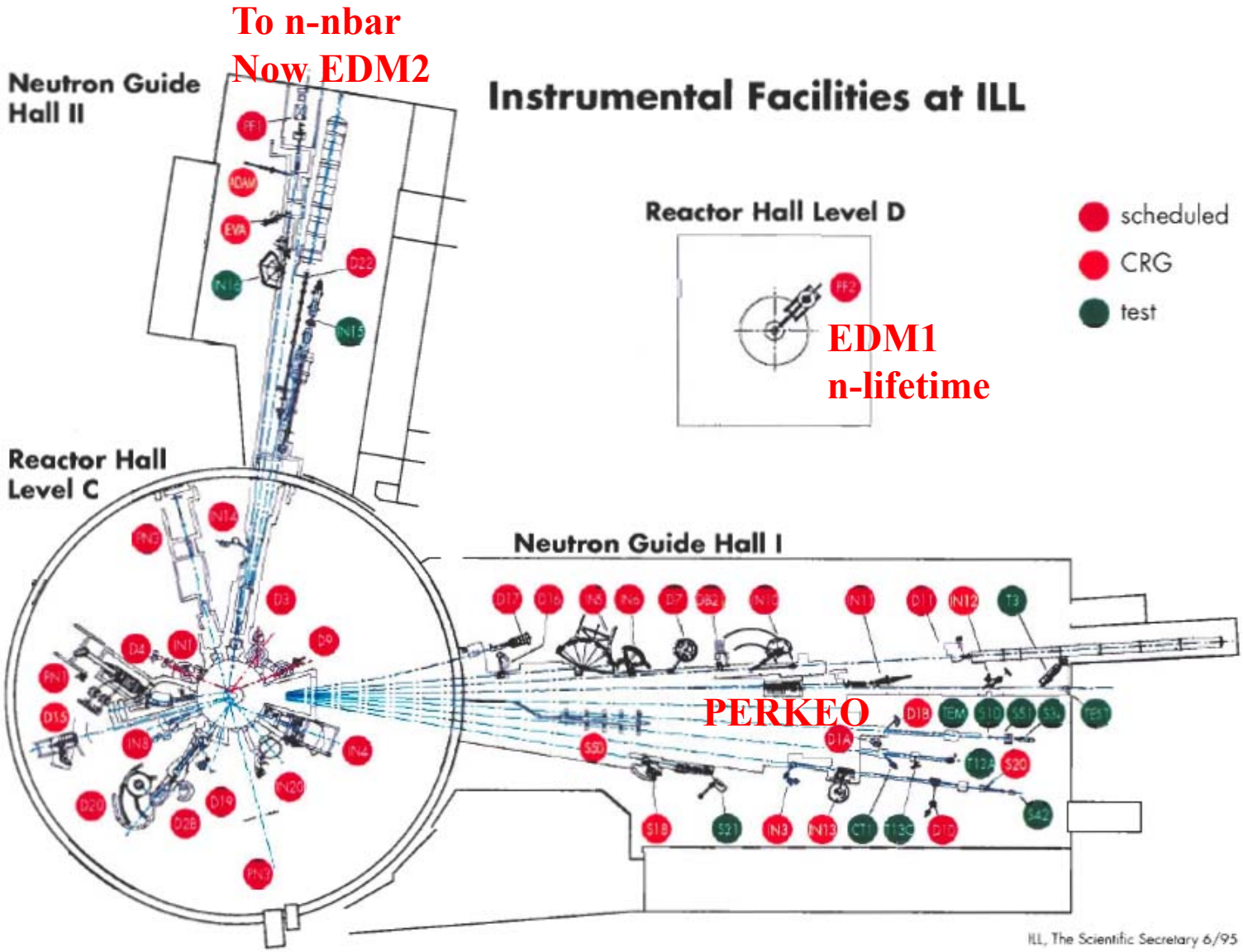

ILL reactor *n*-source

Very cold *n*-guide, to EDM

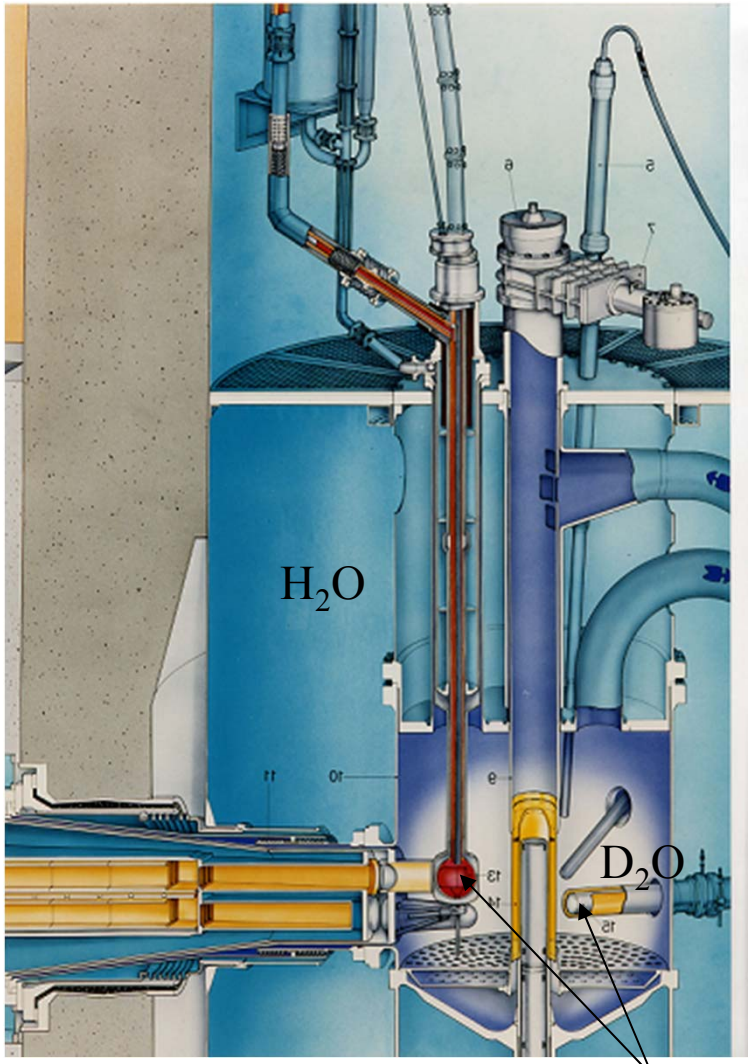

Cold *n*-guides, to PERKEO
Thermal *n*-guides

Cold *n*-guides, to n-nbar

Core ↑ LD_2 cold sources

Early History of n-nbar

$\bar{N} = \varepsilon N (t / \tau_{n\bar{n}})^2$:

Lab., reactor	Neutron intensity $I \rightarrow$	Neutron number $N = IT$	Effect. runtime $\leftarrow T$	n-temp., n-velocity $v \rightarrow$	n-TOF $t = \langle (L/v)^2 \rangle^{1/2}$	Eff. length $\leftarrow L$	Residual B-field	Limit (90%) $\tau_{\text{n-nbar}}$	Reference
ILL HFR	10^9/s	10^{16}	1.5 year	Very cold 160 m/s	25 ms	4 m	0.1 μT	10^6 s	PL B **156**, 122 (1985)
U. Pavia TRIGA	3×10^{10}/s	10^{16}	1 year	Thermal 2200 m/s	10 ms	20 m	~ 1 μT	½10^6 s	ZPh C **43**, 175 (1989)
ILL HFR	10^{11}/s	10^{17}	1 week	Cold 600 m/s	100ms	70 m	< 10 nT	10^7 s	PL B **236**, 95 (1990)
Cont'd.		3×10^{18} $\varepsilon = 0.52$	1 year					~ 10^8 s	ZPh C **63**, 409 (1994)

4 parameters for improvement:
n-intensity I, running time T, n-velocity v, free-flight length L

2. ILL n-nbar beam line

Cold neutrons →

Annihilation detector

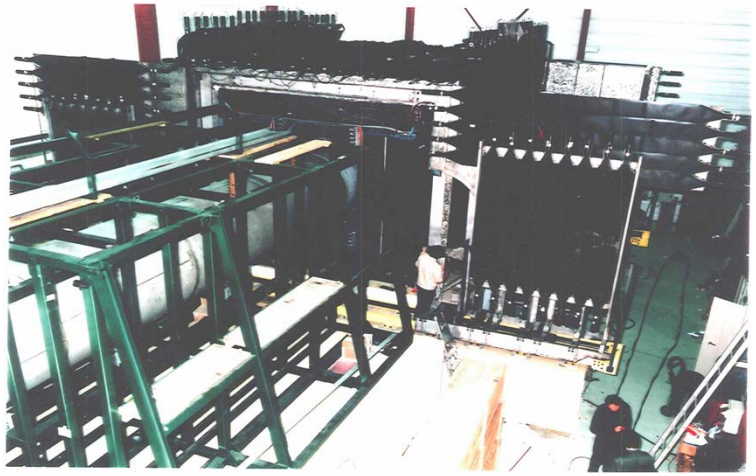

Beam stop

Inside the n-nbar beam line (U. Heidelberg)

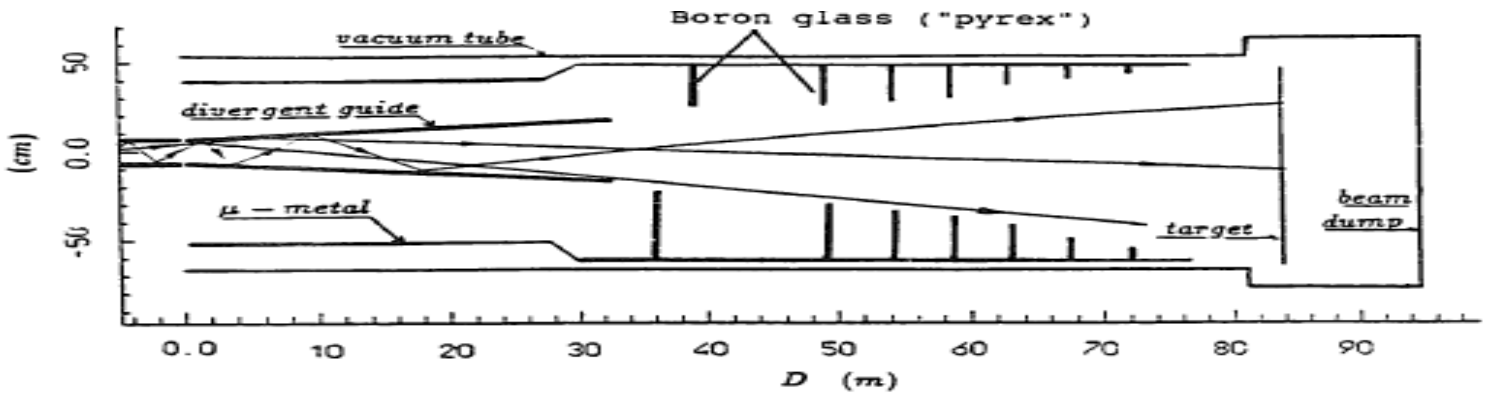

2.5% beam losses 2.7% beam losses

Divergent *n*-guide cuts beam divergence $\theta(\lambda)$

$\theta(\lambda)$ at horn entrance:

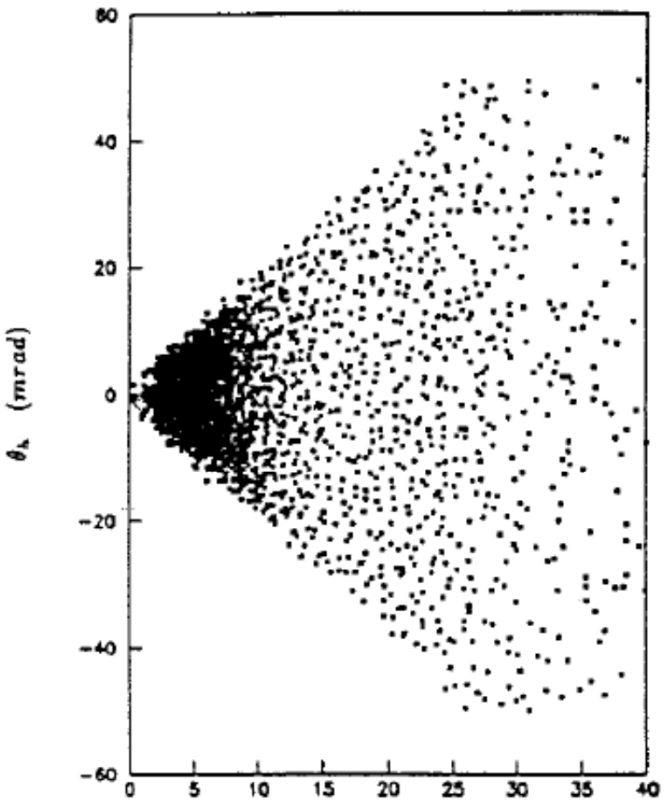

n-wavelength λ/Å

$\theta(\lambda)$ at horn exit:

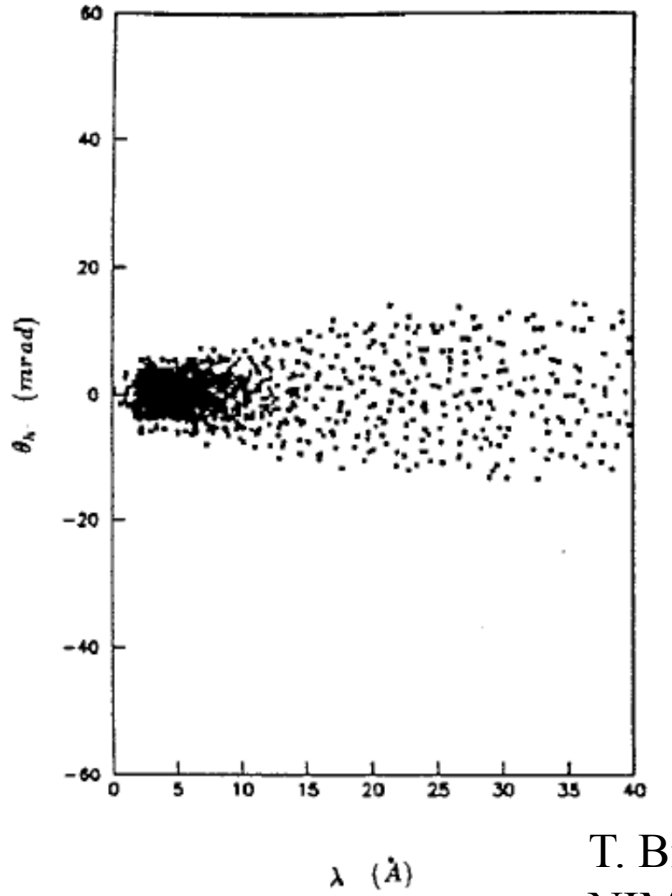

T. Bitter et al.,
NIM A **321**, 284 (1992)

Fig. 2.23 : Die horizontale Divergenz des n-Strahls vor und hinter dem divergierenden n-Leiter

Neutron horn tolerances

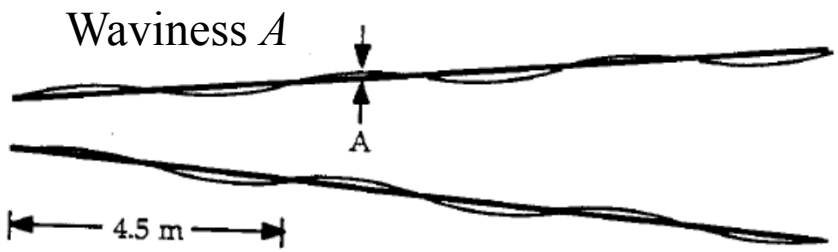

$2\delta = 6$ mrad

Fig. 2.27b : Welligkeit des divergierenden n-Leiters (Periode entspricht der Länge eines μ-Metallrohrs)

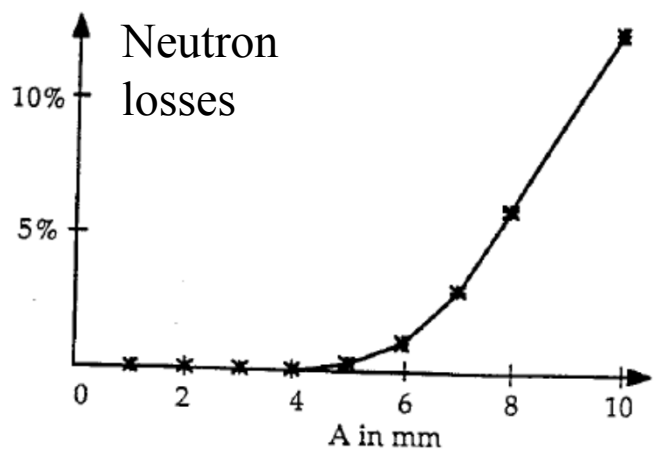

Fig. 2.27c : Zusätzliche Verluste an Neutronen im divergierenden n-Leiter durch die Welligkeit des div. n-Leiters in Abhängigkeit von deren Amplitude(s. Fig. 2.27b)

n-nbar beam line

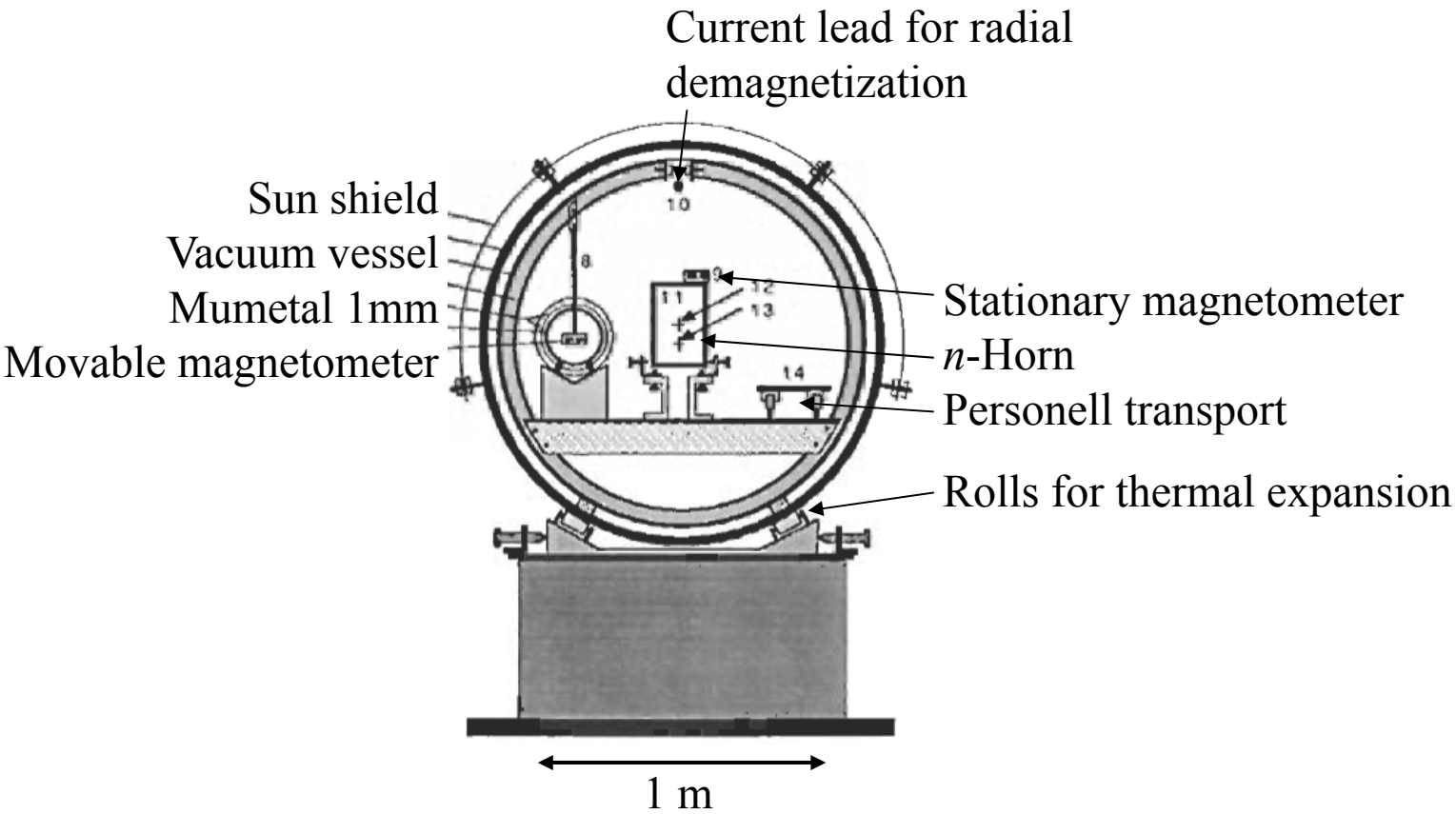

3. Magnetic field suppression

Philosophy:

Long mumetal tube has very good transverse shielding factor $S = 2000$,
but has negligible longitudinal shielding.

No transverse field components means: longitudinal field is very uniform.
A uniform field can be suppressed by active field compensation.

Mumetal tube dimensions given by largest 1000°C vacuum furnace available.

Transverse active field-compensation

Current leads for radial field compensation

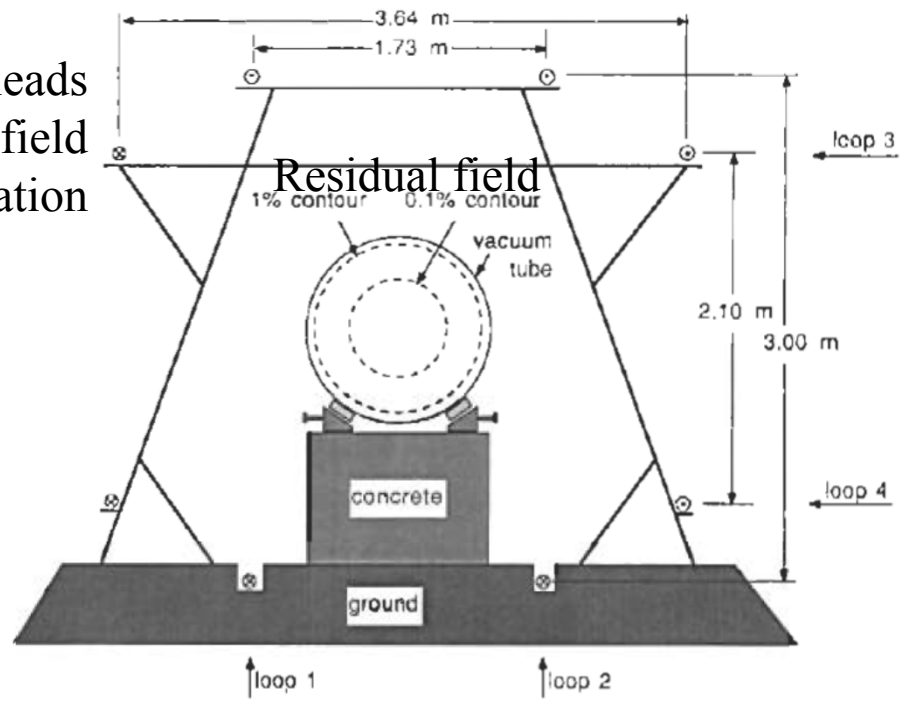

Axial active field-compensation

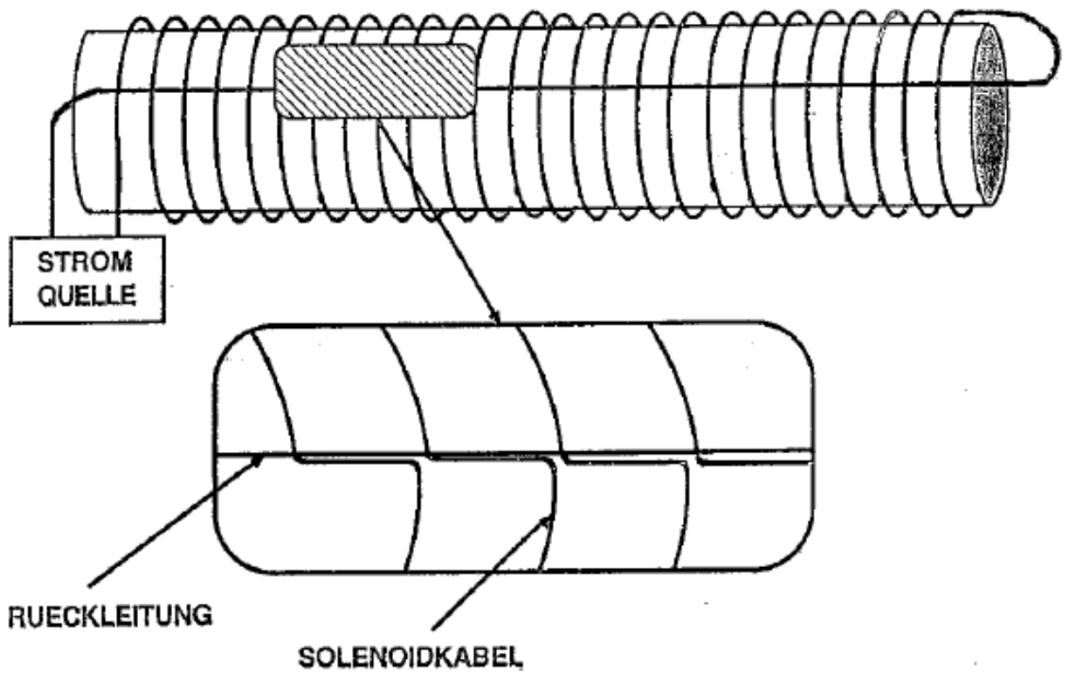

Fig. 3.4 Solenoid der aktiven Longitudinalabschirmung

$B(t)$ under active field-compensation

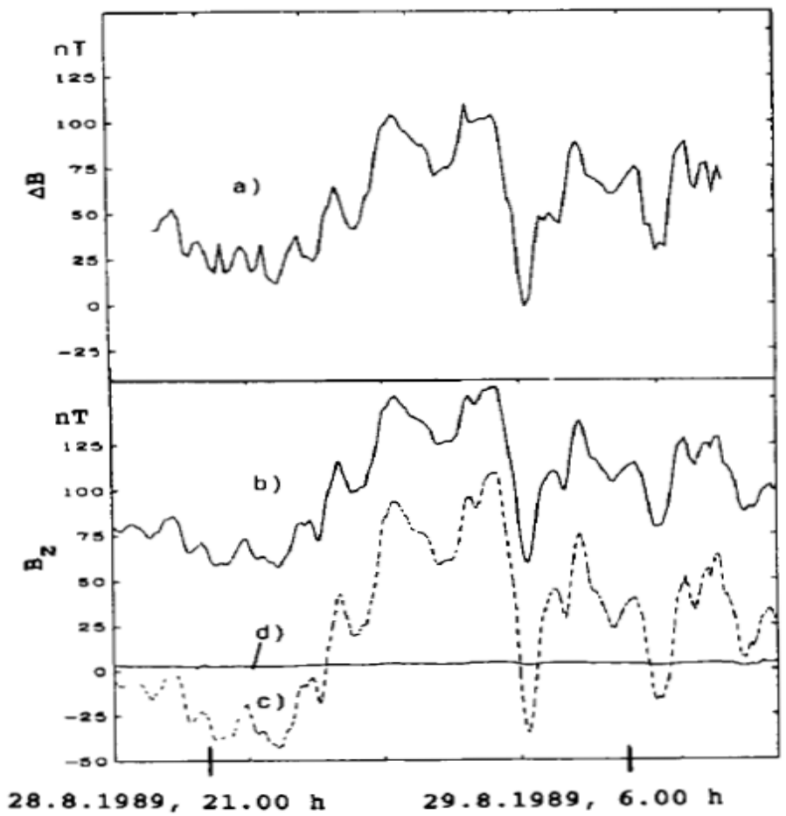

← $B(t)$ from *Observatoire Magnetique* in Orleans (400 km distance)

← $B(t)$ at ILL site

← Servo signal

← $B(t)$ inside mumetal stable on the nT level

Joints of mumetal tubes

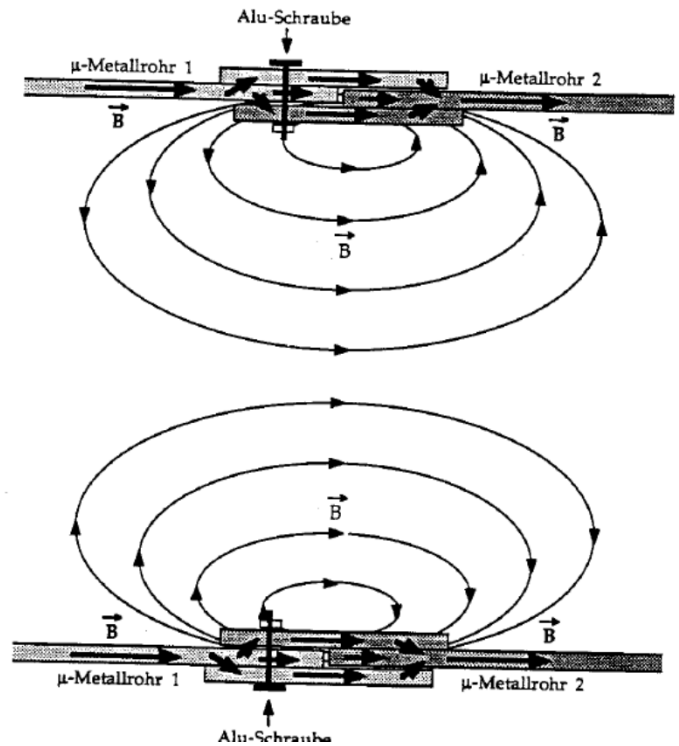

$B(z)$ with mumetal

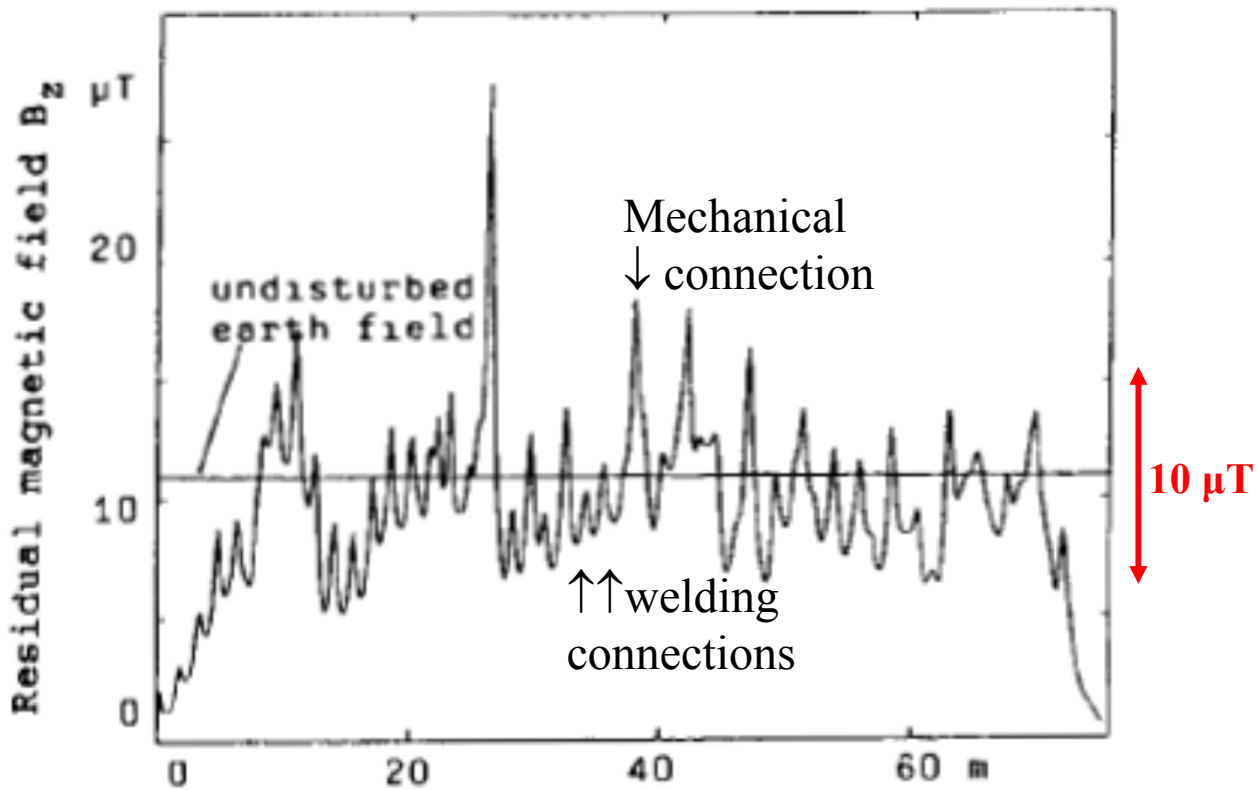

$B(z)$ with mumetal
+ active compensation

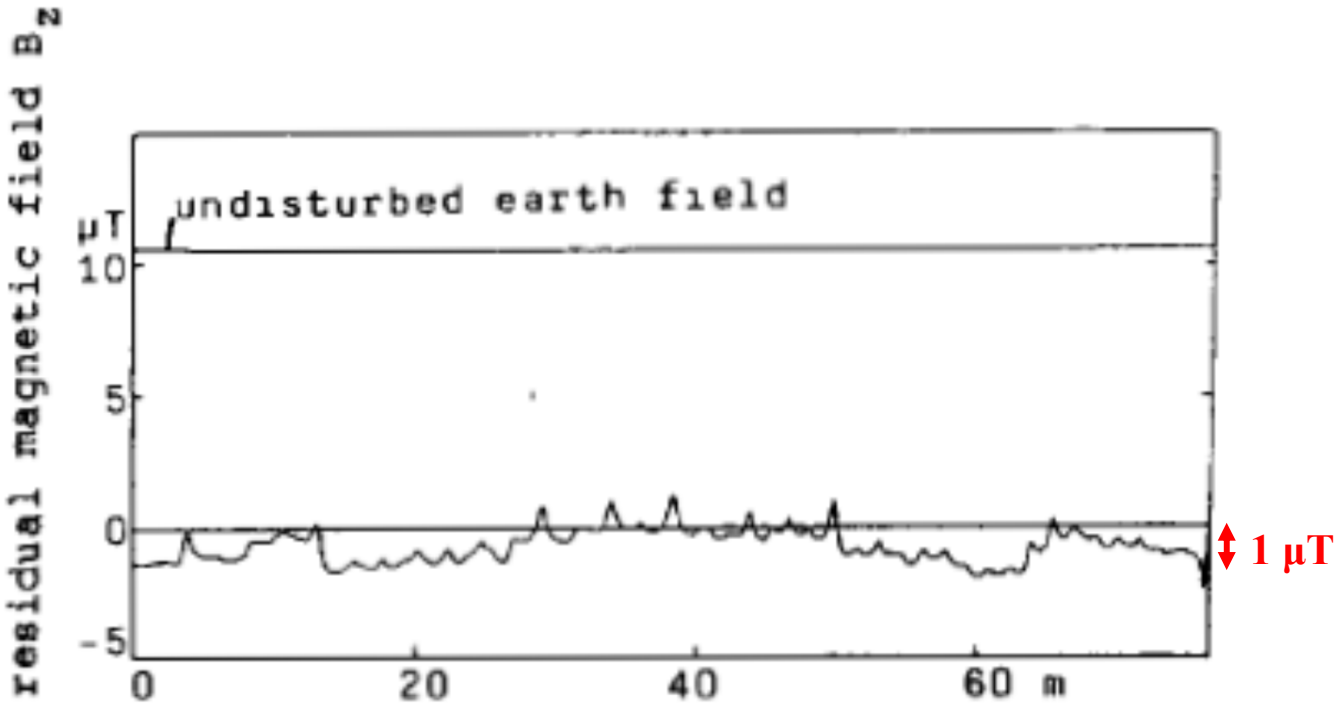

$B(z)$ with mumetal
+ active compensation
+ demagnetization

50 Hz axial plus
1 Hz radial

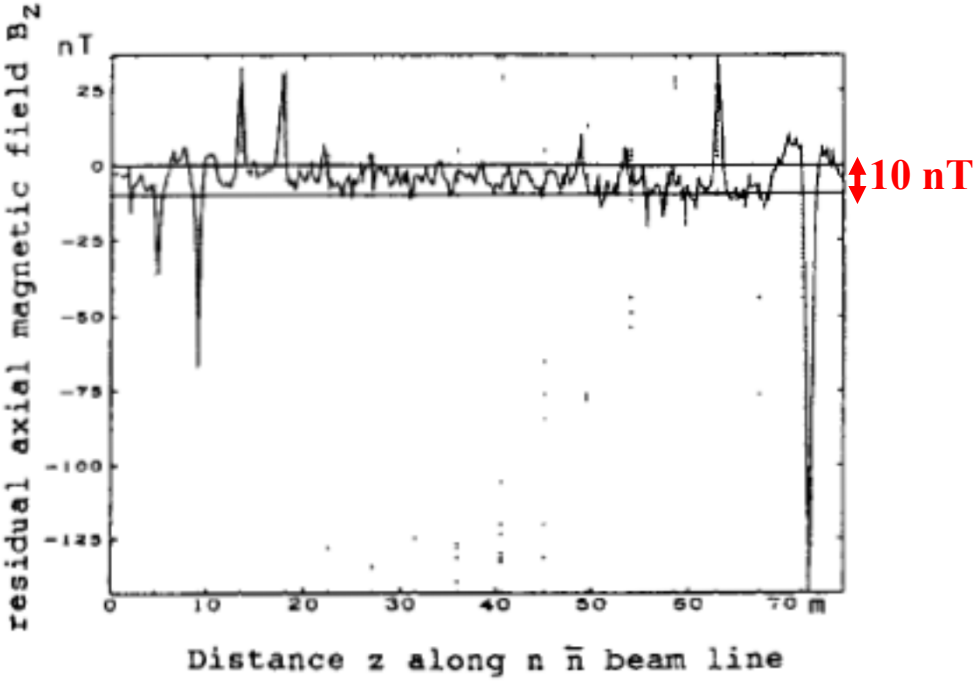

$\mu_{\text{eff}} = 2\times10^6$

Measured twice daily

0.984±0.003 quasifree efficiency

T. Bitter et al.,
NIM A **309**, 521 (1991)
U. Kinkel,
Z. Ph. C **54**, 573 (1992)

Can n-nbar be restored in a dressed-neutron arrangement?

n-spin rotation vanishes →
when dressing with
rf-quanta of arbitrary
frequency

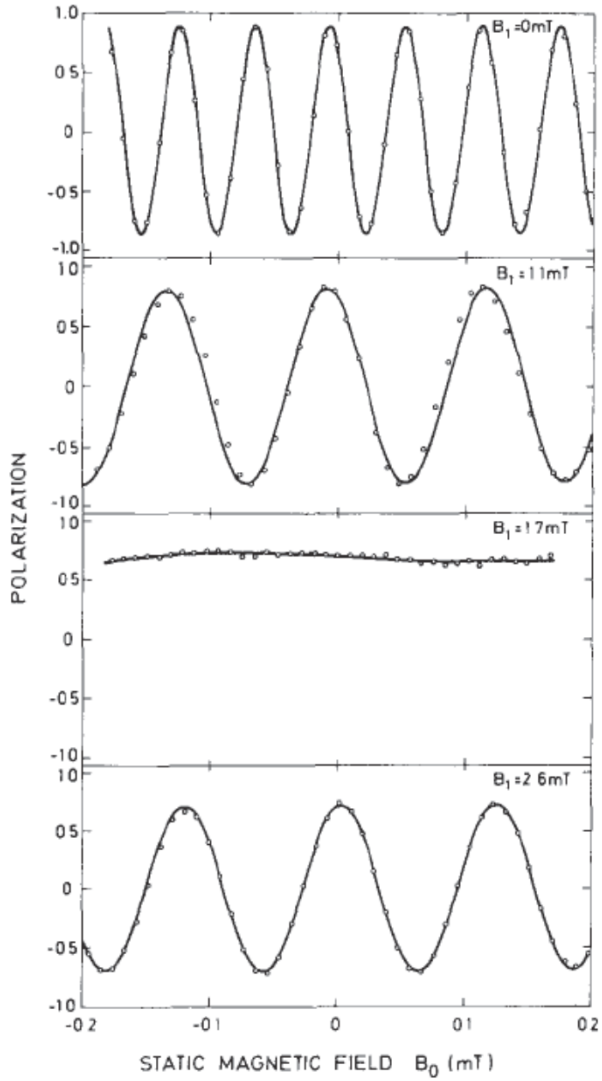

Answer: yes, partially, but …
DD, NIM A **284**, 22 (1989)

Measurement of $\langle \boldsymbol{B}(t) \rangle$ with neutron itself

With spin-echo method:

Spin rotation angle $\varphi = \gamma \langle B \rangle t = (2 \pm 1)°$

$\Rightarrow$ Quasifree efficiency = 99.8%

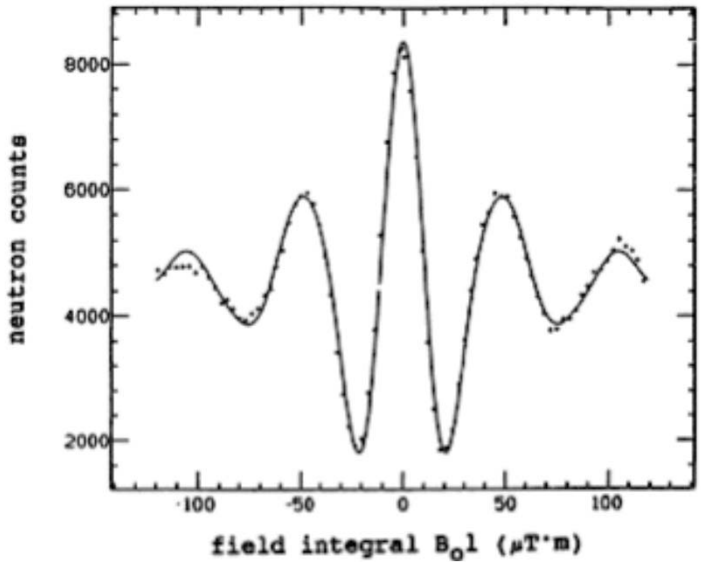

U. Schmidt et al.,
NIM A **320**, 569 (1992):

4. Radiation background
Along beam line:

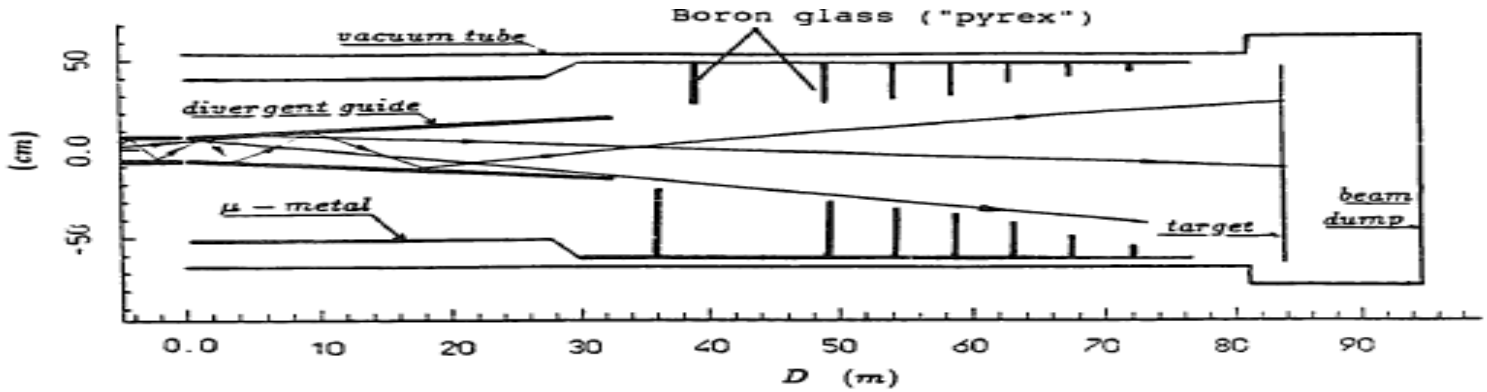

Lost neutrons,

Without baffles:

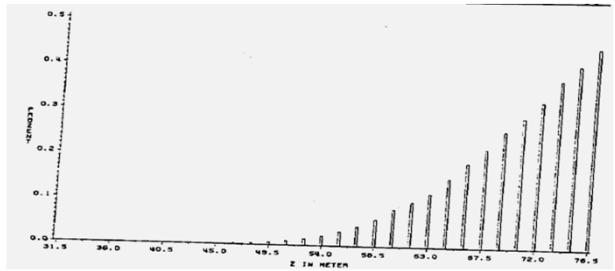

with baffles:

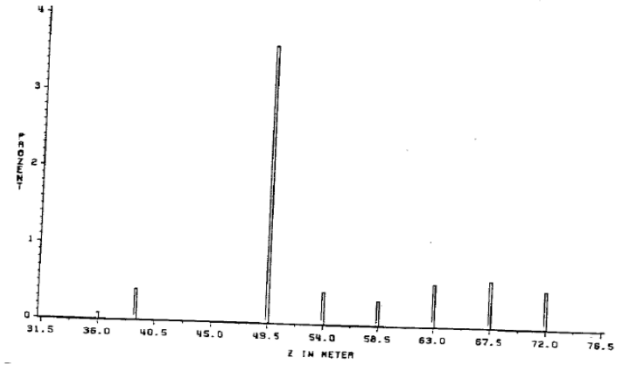

Background: Annihilation foil

Target: exfoliated graphite
1.1 m ∅
0.13 mm thick

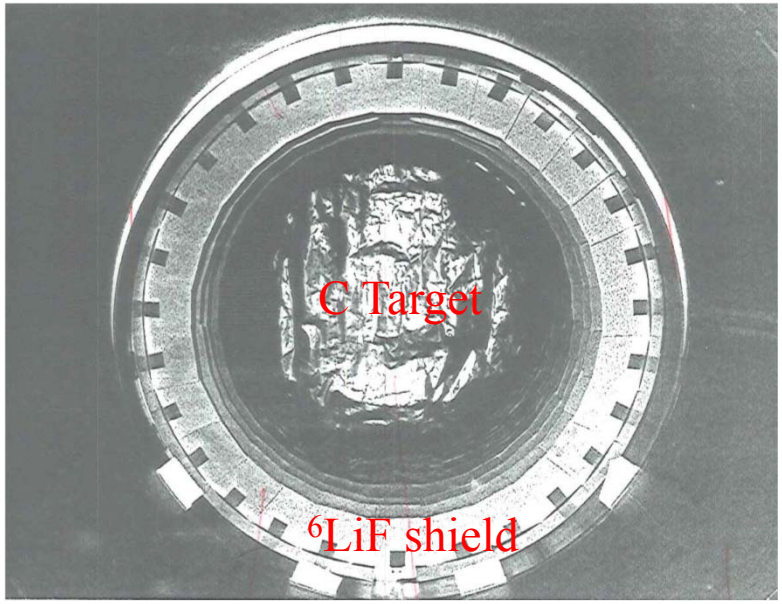

Shield: 900 tiles
20 m^2
2 mm thick

Target region

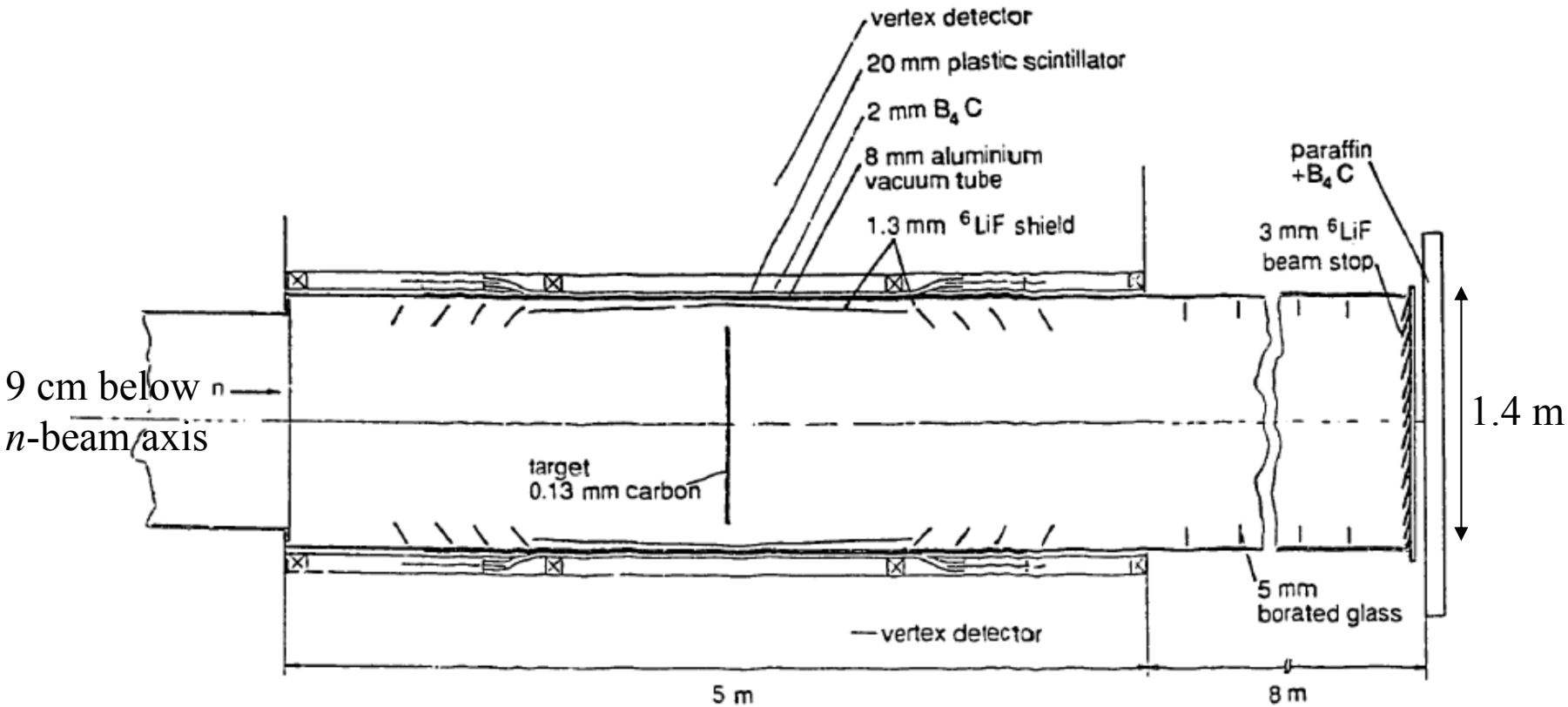

Fig. 1. The target region of the $n\bar{n}$ experiment and its surroundings.

Measured background from target

Neutrons incident on target 1.3×10^{11} s^{-1}

Neutrons scattered on C 7×10^{8} s^{-1}
on 5% H 5×10^{8} s^{-1}

n's transmitted by LiF shield 3×10^{6} s^{-1} (10^{-5} neutron suppression!)
and mostly transformed to gammas.

Gammas emitted from C 3×10^{6} s^{-1}
from H 5×10^{6} s^{-1}

Total gammas in annihilation detector $\sim 10^{7}$ s^{-1}.

F. Eisert et al.,
NIM A **313**, 477 (1992)

Typical crew size during data taking

Annihilation detector (INFN Padova and Pavia)

1. Inner Vertex Detector: 10 layers of Limited Streamer Tubes (LST), 0.3 g/cm^3, Vertex ±4 cm
2. Outer Calorimeter: 12 layers of LST interleaved with Pb/Al planes
3. Timing: Inner and outer planes of Plastic Scintillators (PSc), 700 ps,
4. Cosmic ray rejection with 95 m^2 outmost layer of PSc, separated by 10 cm Pb.

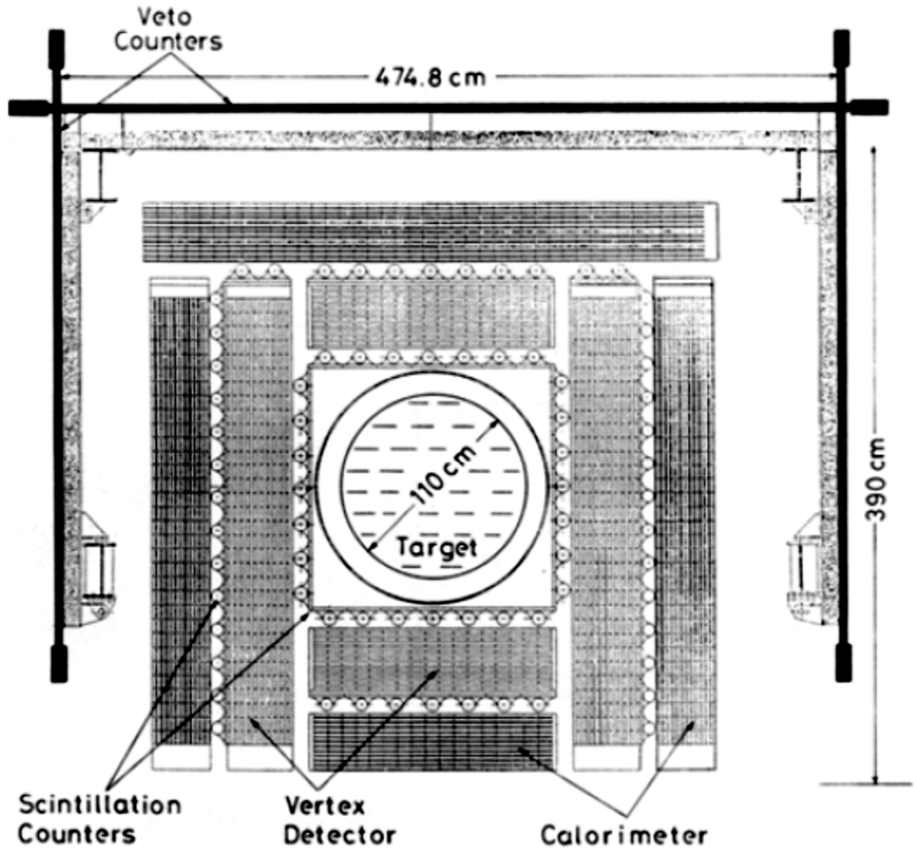

Fig. 5. The $\bar{n}$ annihilation detector (cross sectional view)

60 000 electronic channels
Overall nbar detection efficiency 52±2%.

Explosion-proof gas mixture

Trigger and data analysis

Cuts to reduce background without losing true events:

1. Cosmic ray veto, 99.5% veto eff.	1.3 MHz, 7% dead time
2. Hardware filter (trigger):	(↑mostly from scattered neutrons)
2 timing signals in one quadrant	2000 Hz
1 track in vertex detector of same quadrant	800 Hz
1 further timing signal	6 Hz
120 LST channels respond	4 Hz, on tape
3. Software filter on-line	70 Million triggers total
deposited energy between 1 and 2 GeV	
total momentum ≈ 0	
timing inside-out	
vertex on target $\|z\| < 15$ cm	12 000 events left,
mostly cosmics	
4. Visual inspection by trained scanners	403 events left
5. Vertex reconstruction by physicists	0 events left

Vertex distribution

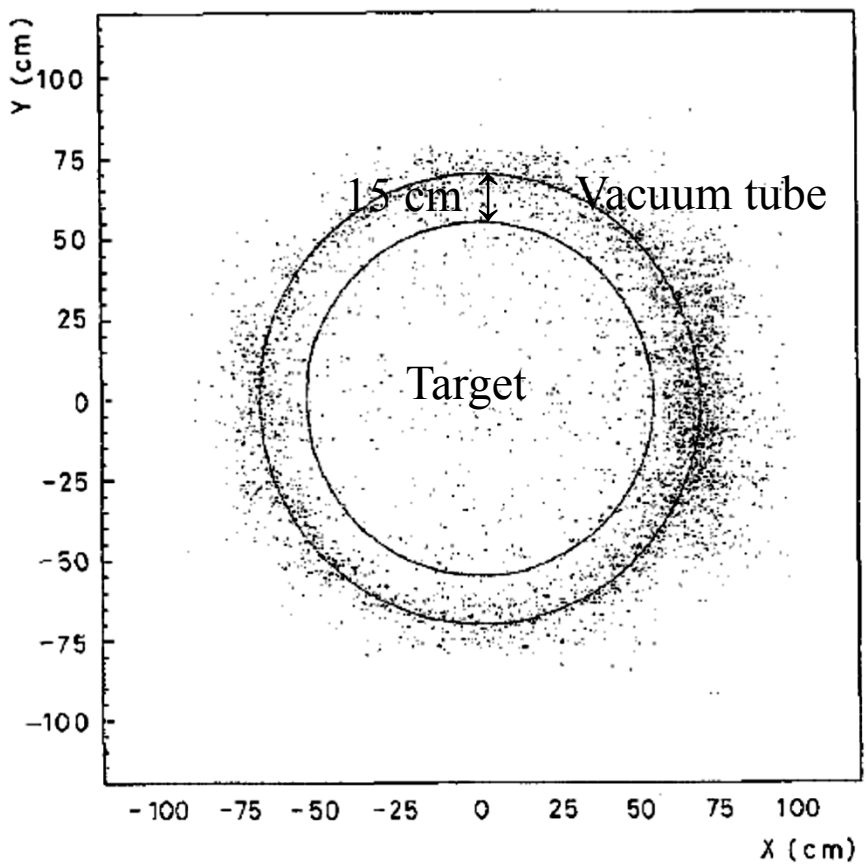

Fig. 6. Vertex distribution in the plane orthogonal to the beam axis of a subsample of reconstructed events

Hardware rejected: Cosmic ray muon

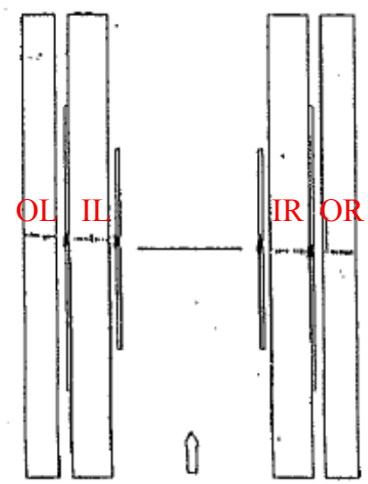

RUN # 881
EVENT # 146 (old 146)
20:39:24.01

#Hits	#Clusters	Hits/Cluster
294	109	2.7

# Counters		4
OR	4	3.20
IR	3	5.08
IL	3	9.89
OL	7	11.61

↑ TOF/ns

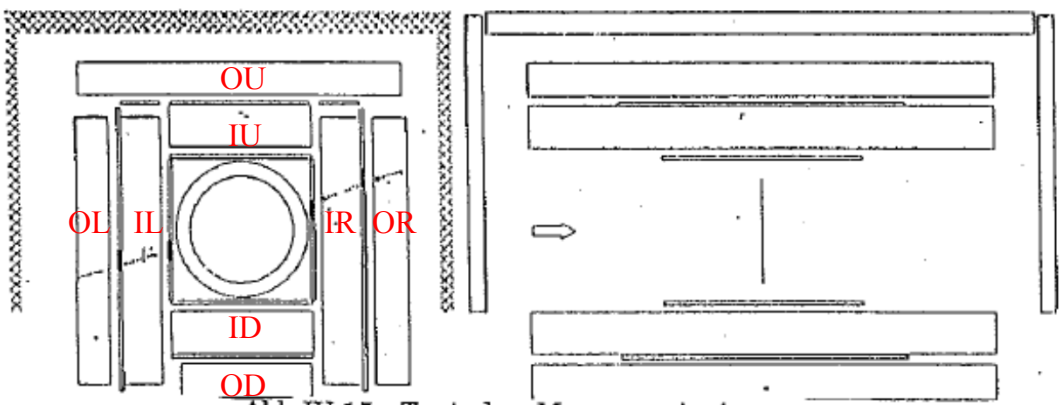

Abb IV 15 : Typisches Myonenereignis

Software rejected:
Cosmic ray secondary event in the beam tube

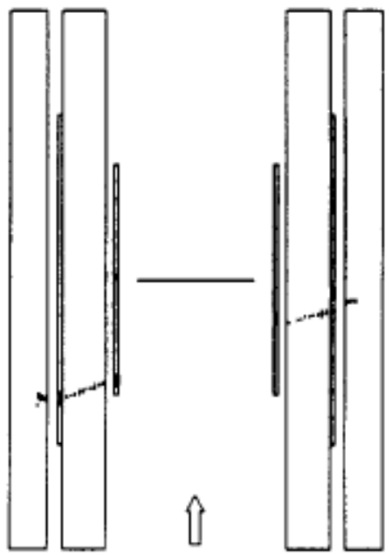

```
RUN            496
EVENT        21991
17-MAR-1989 16:57:31.96
#Hits #Clusters Hits/Clusters
   302    103         2.9
```

```
# Counters    6
 OU   6    0.25
 IU   4    1.53
 IR   2    5.07
 IL   4    5.89
 OR   5    8.82
 OL   7   10.00
```

↑ TOF/ns

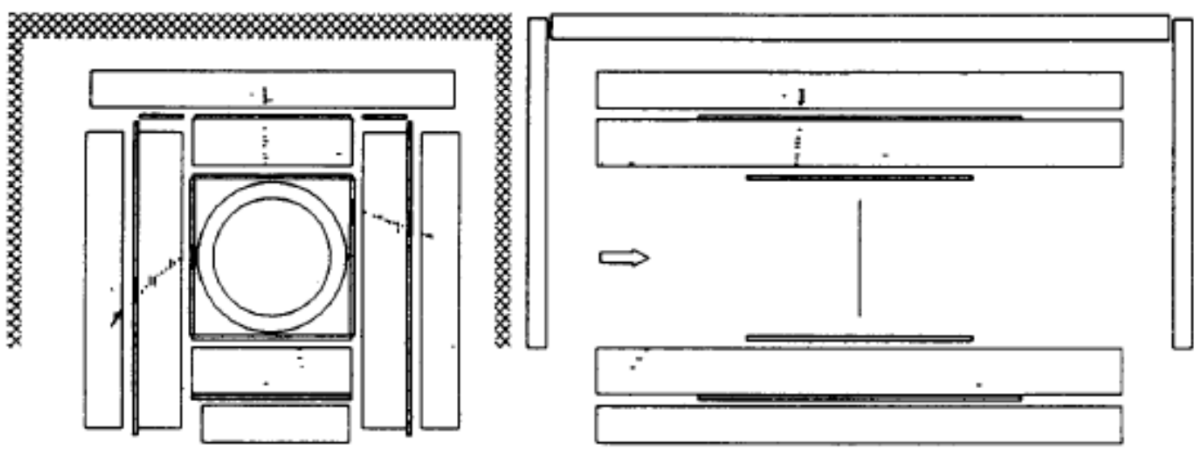

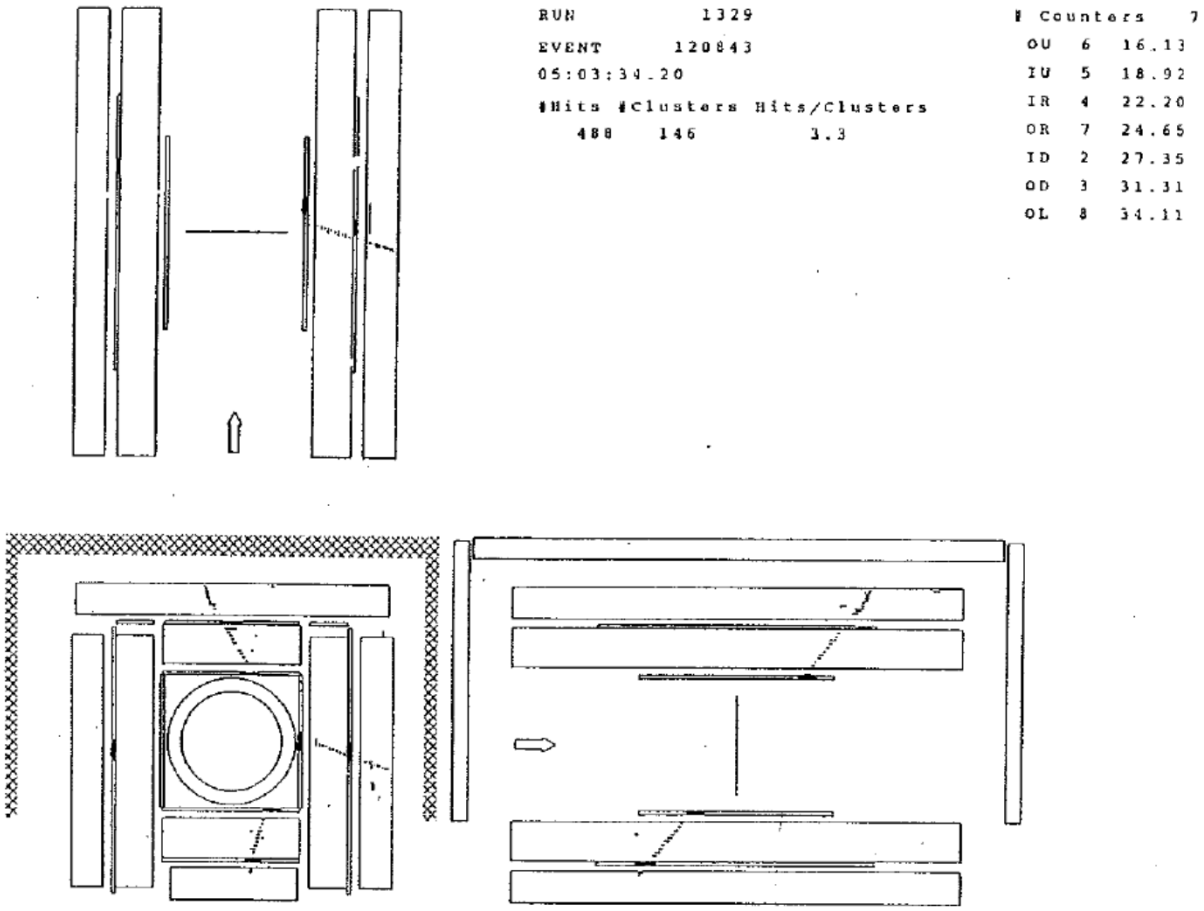

Abb IV 17 : Ein Kosmic mit Reaktion im Detektor, durch Zeitinformation identifiziert

Rejected by scanner inspection

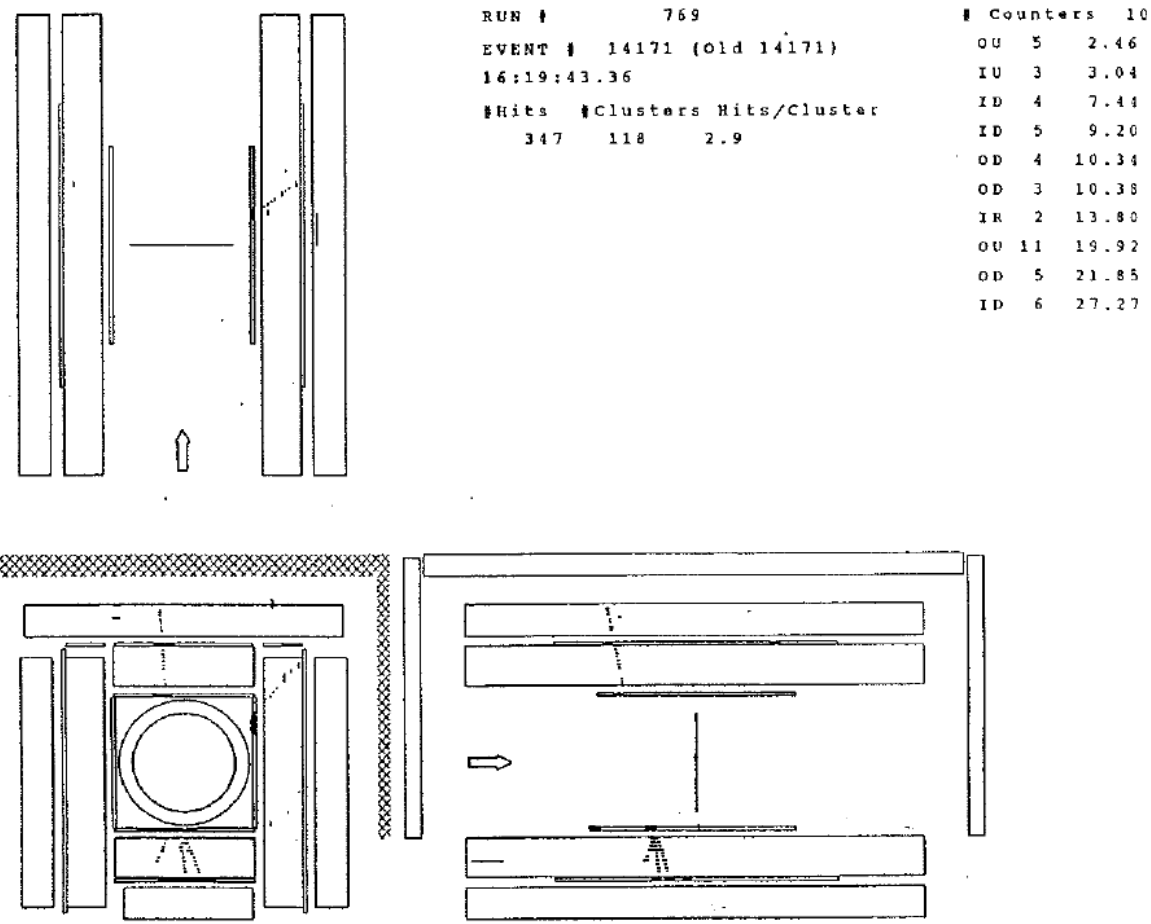

Abb IV 18 : Typisch Skannerselektiertes Event

Rejected after vertex reconstruction

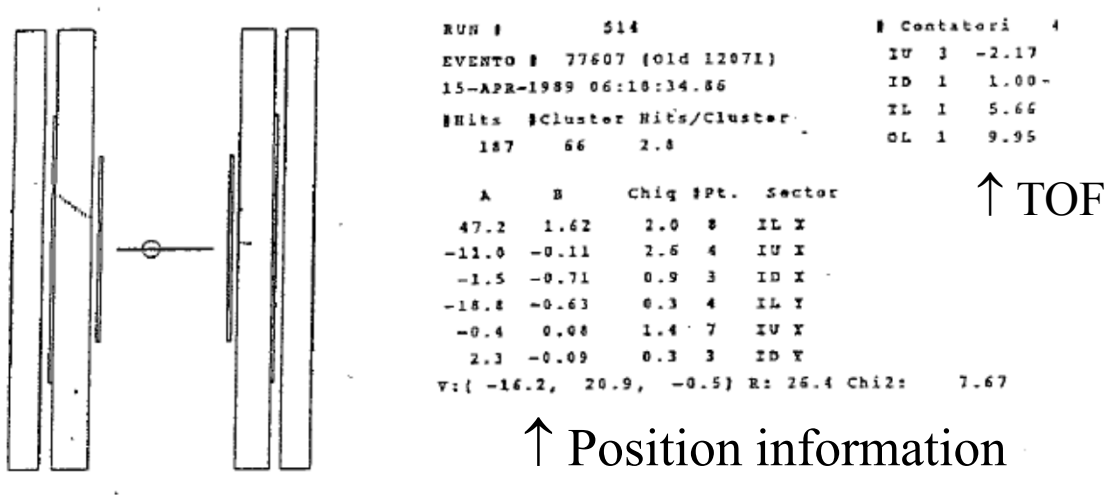

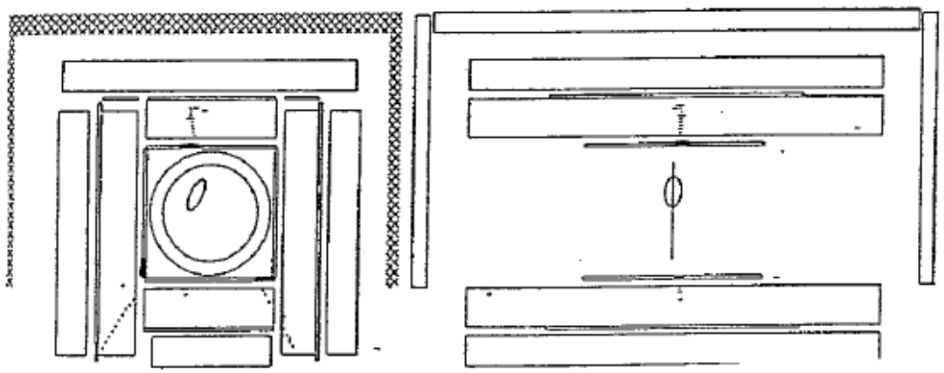

Abb. IV 22 : Targetevent mit falscher Zeitinformation

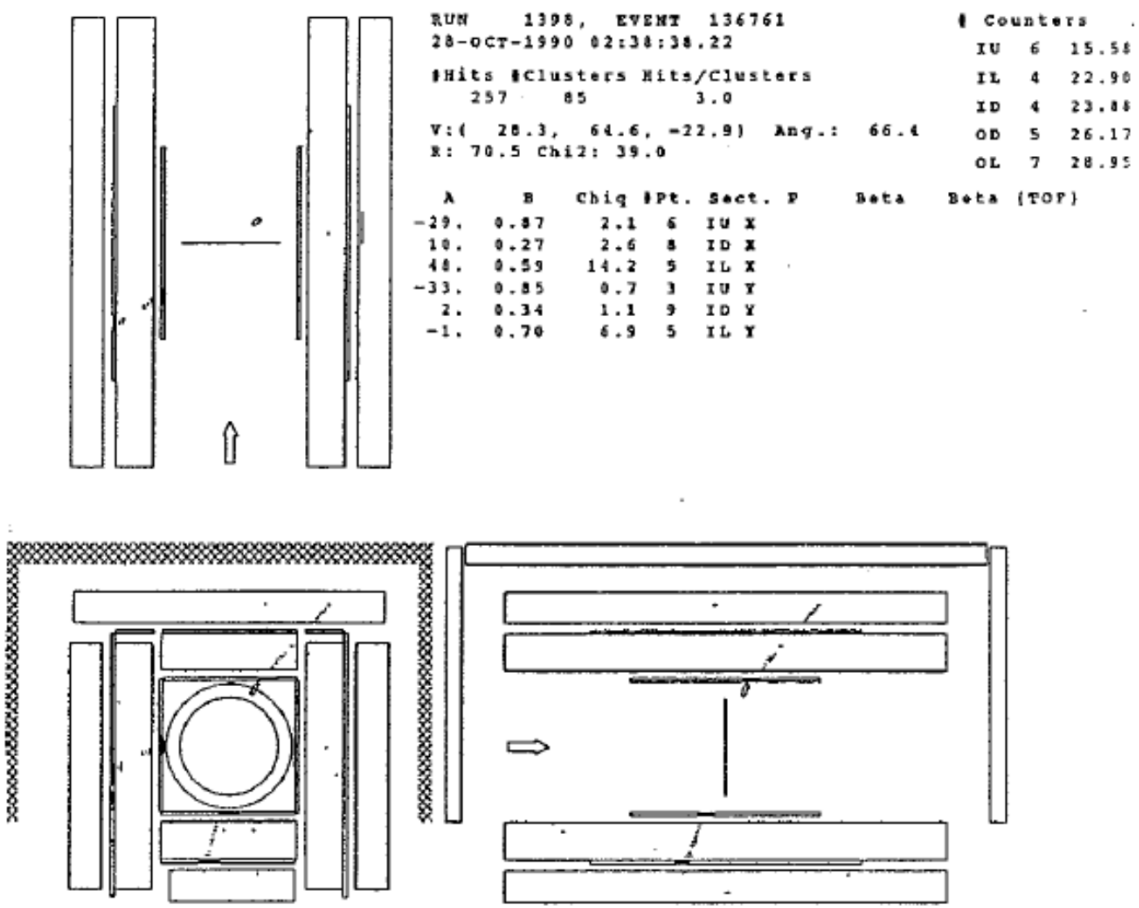

Abb IV 21 : Typisches Tubeevent aus dem Sample zur Untergrundbestimmung

Last remaining event nearest to nbar signal

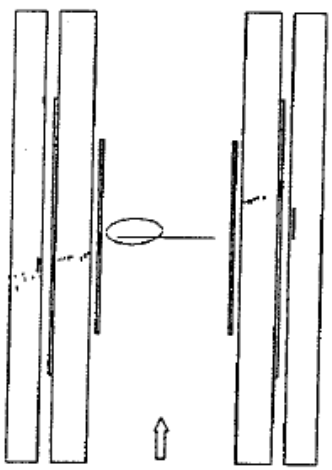

```
RUN     1388,  EVENT    45698
19-OCT-1990 21:01:17.07

#Hits #Clusters Hits/Clusters
   312     89          3.5

V:( -36.2,  -3.8,  -6.2)  Ang.:    6.0
R: 36.4 Chi2: 12.7 ( 31.5%)
E_Tot(Mev/c2) 714.8  P_tot(Mev/c): 851.1
 A      B    Chig #Pt. Sect. P     Beta    Beta (TOF)
-27. -0.52    0.0   4  IL X
 14.  0.33    0.0   4  IR X  607. 0.54(  Pr)
-39. -0.67    0.0   3  ID X  623. 0.55(  Pr)
 44.  1.23    2.1   3  IL X  585. 0.53(  Pr)
  8.  0.34    4.9   3  IR Y
  9.  0.18    2.2   7  ID Y
  6.  0.26    1.2   5  IL Y

# Counters    8
 IL  4    9.31
 OL 10   11.71
 OL  9   11.90
 IL  2   15.51
 IR  2   15.87
 OL 11   17.18
 OR  4   18.58
 ID  3   18.83
```

Barycenter too low, rejected

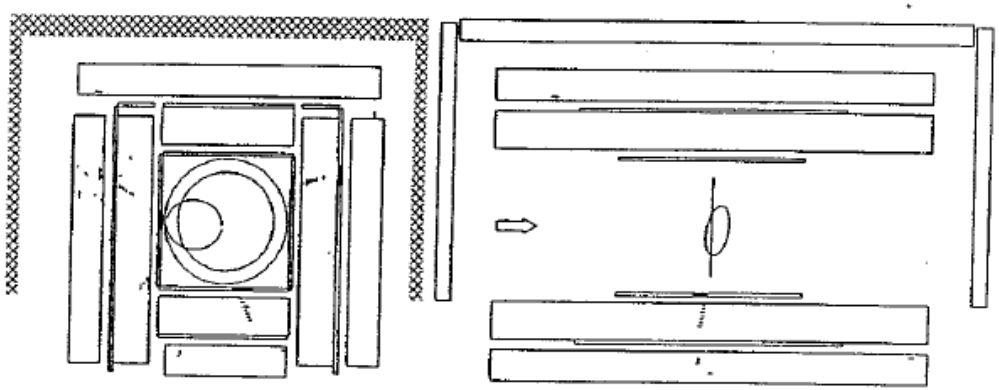

Abb IV 23 : Event des Experimentes, daß einem Antineutronevent am nächsten kam

Summary

In upscaled n-nbar experiment:

1. Magnetic shielding on 1 nT scale is feasible with state-of-the-art techniques.

2. Radiation background, beam related, should be improved by using thinner and cleaner target and tighter ^{6}LiF shield.

3. Annihilation detector with higher track resolution is desirable.