Challenges in the construction of large neutrino detectors: *the JUNO case*

Michele Montuschi

On behalf of JUNO collaboration

INFN Istituto Nazionale di Fisica Nucleare

JUNO

Università degli Studi di Ferrara

23rd International Workshop on Neutrinos from Accelerators (NUFACT 2022), 06/08/2022

Some main technological challenges

Water Monitor

SS shell assemble

Double Calorimetry

Alumina Column

Distillation

Detector Hall

Acrylic Node

UnderWater Box

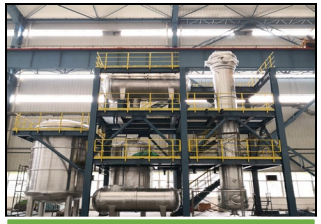

Water Extraction

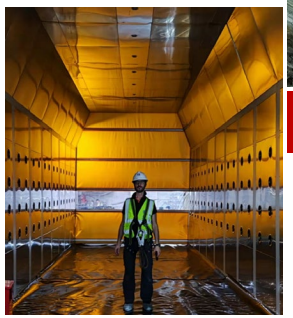

Clean Room

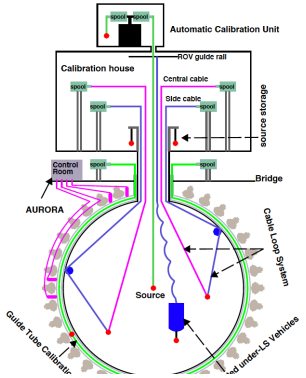

Calibration Units

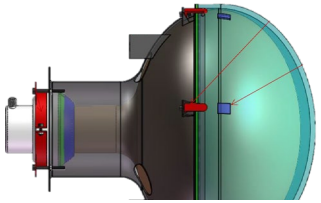

PMT Cover

Steam Stripping

Excavation Experimental Hall

- Water during Excavation
- Cleanliness Control

Building Detector

- High Radiopurity material
- High Transparency
- High Energy resolution

Designing Electronic and PMT

- Reduce the systematics
- Low Signal-to-Noise ratio
- Underwater implosion

Studying Liquid Scintillator

- High transparency
- High light yield
- High Radiopurity

Detector Construction

The translation from paper to the reality

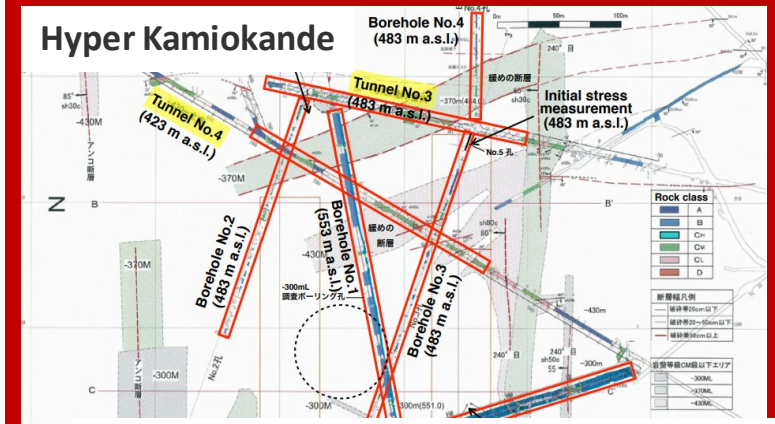

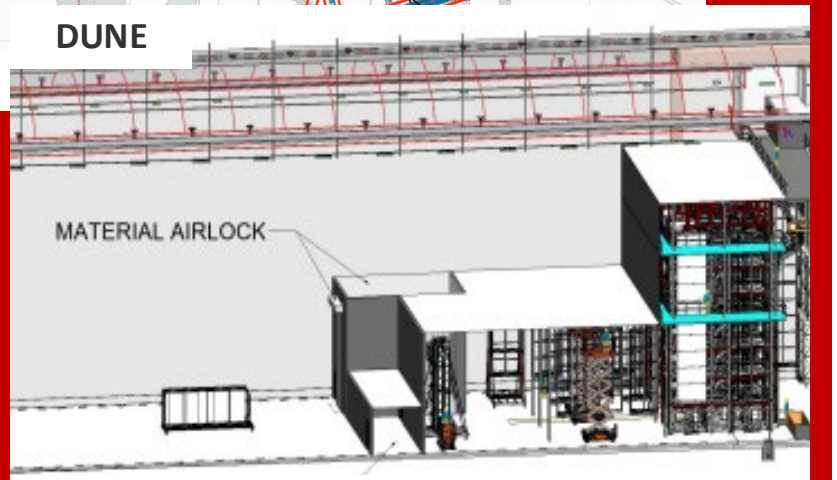

B. Abi et al 2020 JINST 15 T08010 – Clean Room

- **High Energy resolution**
- **High Radiopurity material**
- **High Transparency**

Handling high masses (1 kton to 260 kton)

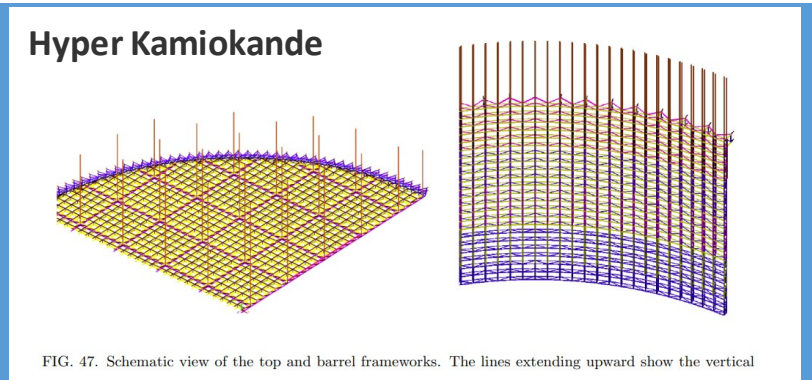

FIG. 47. Schematic view of the top and barrel frameworks. The lines extending upward show the vertical

Hyper-K Design Report – PMT SS Support

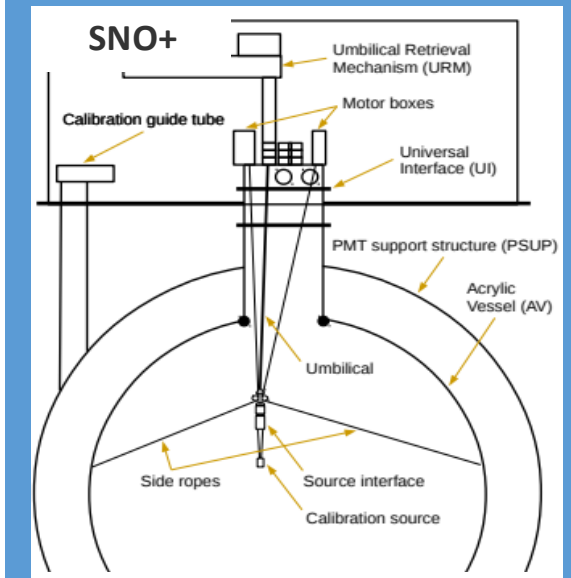

*The SNO+ collab. et al 2021 JINST **16** P08059 – Calibration Units*

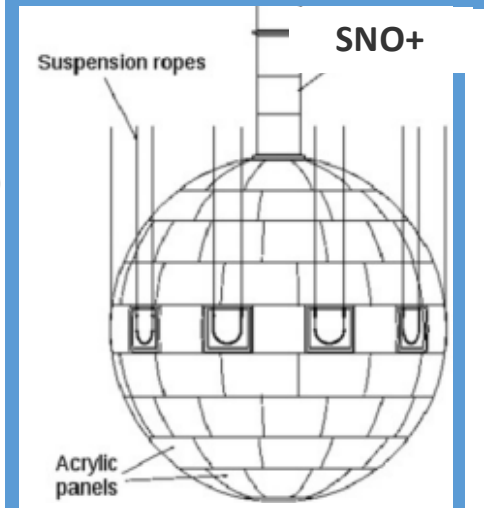

*The SNO+ collab. et al 2021 JINST **16** P08059 – Acrylic sp. and supports*

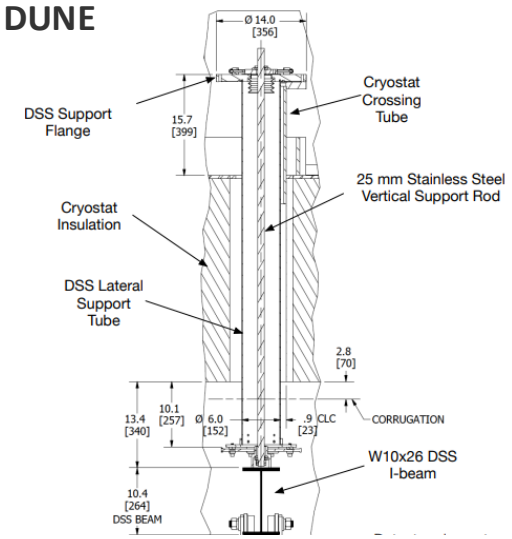

B. Abi et al 2020 JINST 15 T08010 – Detector Supports

Electronics and photon-detection Scintillator

A sophisticated Electronics installed in unconventional and hostile enviroment (Liquid Scintillator, Water, Ice)

PINGU

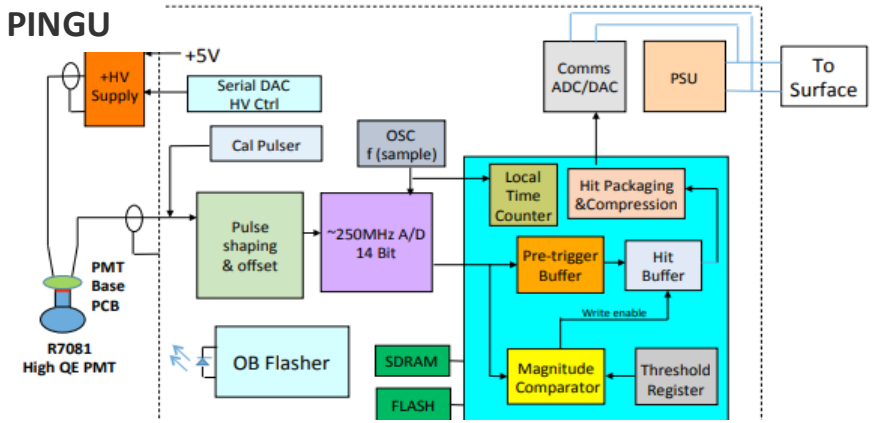

arXiv:1401.2046v1 – Electronics Scheme

Hyper Kamiokande

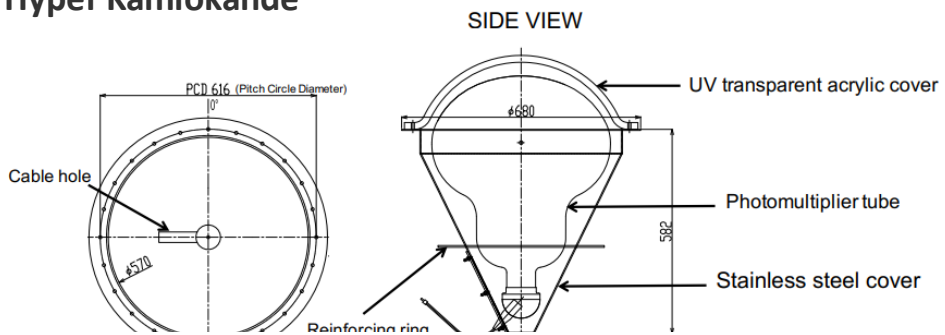

Hyper-K Design Report – PMT Cover

DUNE

B. Abi et al 2020 JINST 15 T0801 Electronics Box

DUNE

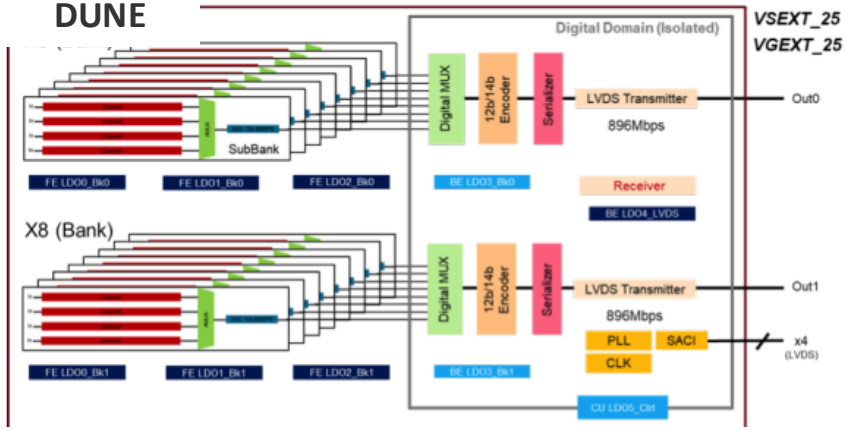

B. Abi et al 2020 JINST 15 T08010 Electronics Scheme

Purification – An industrial process (Underground..)

SNO+

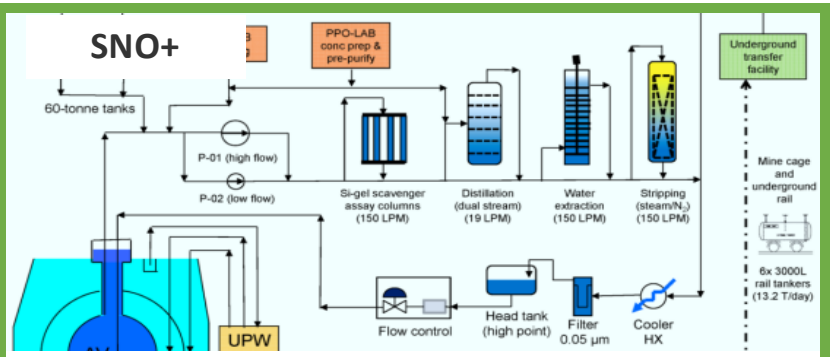

*The SNO+ collaboration et al 2021 JINST **16** P08059 – Liquid Scintillator Production*

Let's see how JUNO faced all this challenges…(and some more)

Reactor antineutrinos in JUNO

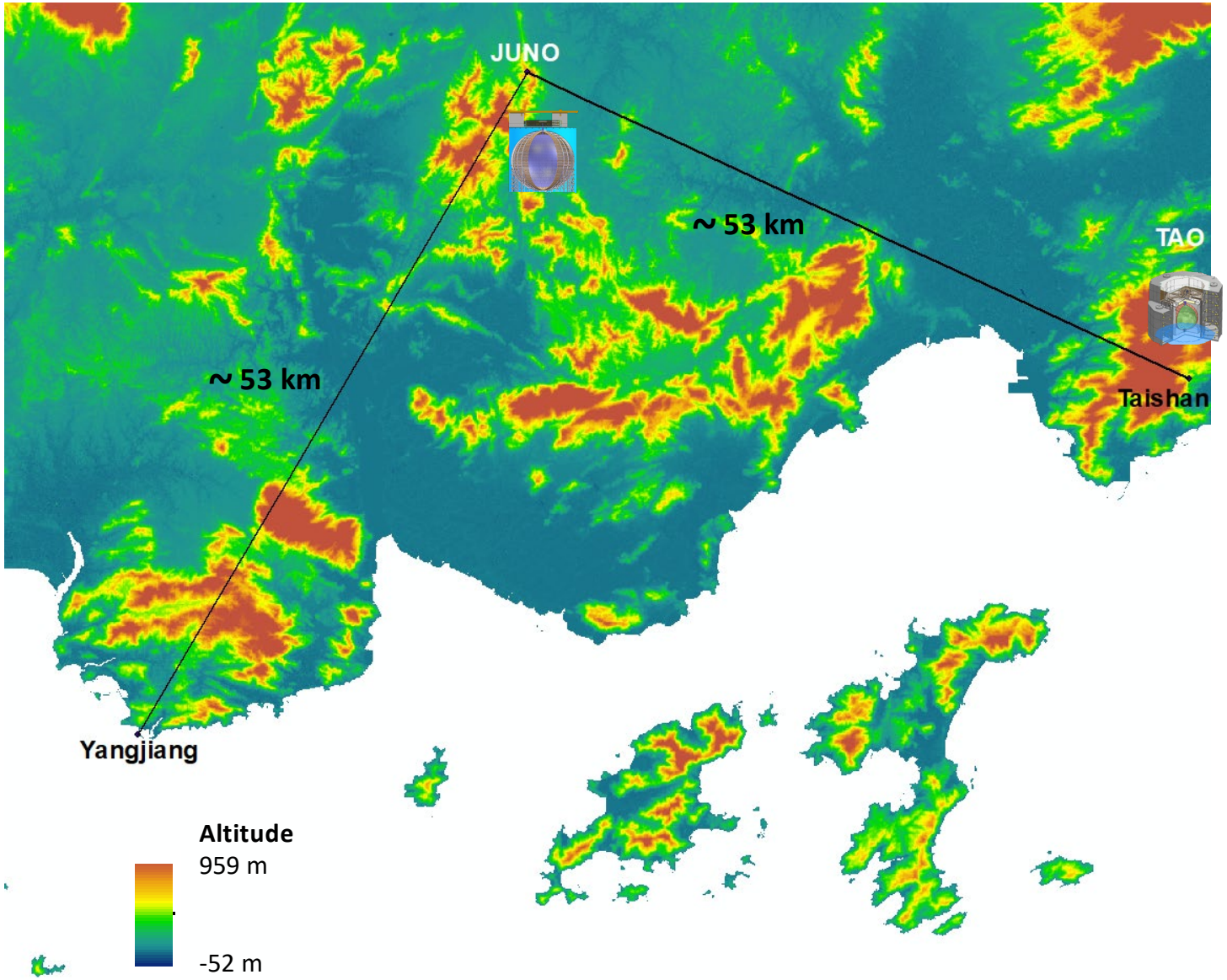

Total Thermal Power: 26.6 GW_{th}
Taishan: 2 reactors X 4.6 GW_{th}
YangJiang: 6 reactors X 2.9 GW_{th}

Expected anti-nu signal: 60 IBD/day
Abusleme et al., JUNO physics and detector, Progress in Particle and Nuclear Physics Available online 03 December 2021, 103927.

The JUNO experimental hall is located ~ 53 km from reactors below an average rock cover of about 650 m: the shielding capacity against the cosmic rays is about 1800 m.w.e.

more on details physics challenges by Livia Ludhova on Monday's plenary talk

Jiangmen Underground Neutrino Observatory

Central detector (CD):

- Stainless steel latticed shell ID=40.1 m
- Acrylic sphere with 20 ktons liquid scintillator (LAB+fluors) ID=35.4 m
- 17571 large PMTs (20-inch)
- 25600 small PMTs (3-inch)
- 78% PMT coverage

Water Cherenkov muon veto:

- 2400 20" PMTs
- 35 ktons ultra-pure water
- Efficiency > 99%

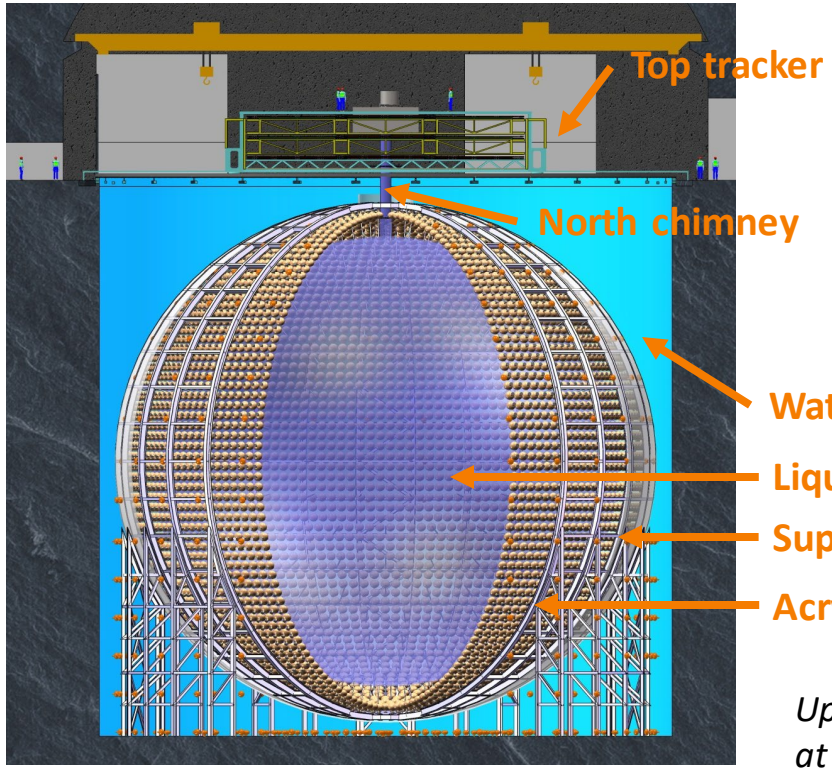

Compensation coils:

- Residual Earth magnetic field <10%

Top tracker:

- Precision muon tracking
- 3 plastic scintillator layers
- Covering half of the top area

Update on the JUNO sensitivity to Neutrino Mass Hierarchy at the parallel talk of Jinnan Zhang at WG1

Experiment	Daya Bay	BOREXINO	KamLAND	JUNO
LS mass	8 X 20 ton	~300 ton	~1 kton	**20 kton**
Coverage	~ 12%	~ 34%	~ 34%	**~ 78%**
Energy Resolution	~ 8.5 %/√E [MeV]	~ 5 % /√E [MeV]	~ 6 % /√E [MeV]	**~ 3 %/ √E [MeV]**
Photon-Electron Yield	~160 p.e. /MeV	~500 p.e. /MeV	~250 p.e. /MeV	**>1345 p.e. /MeV**

A challenge overcome in the construction of the site

Challenges:

Excavation interrupted due to high water level in the tunnel

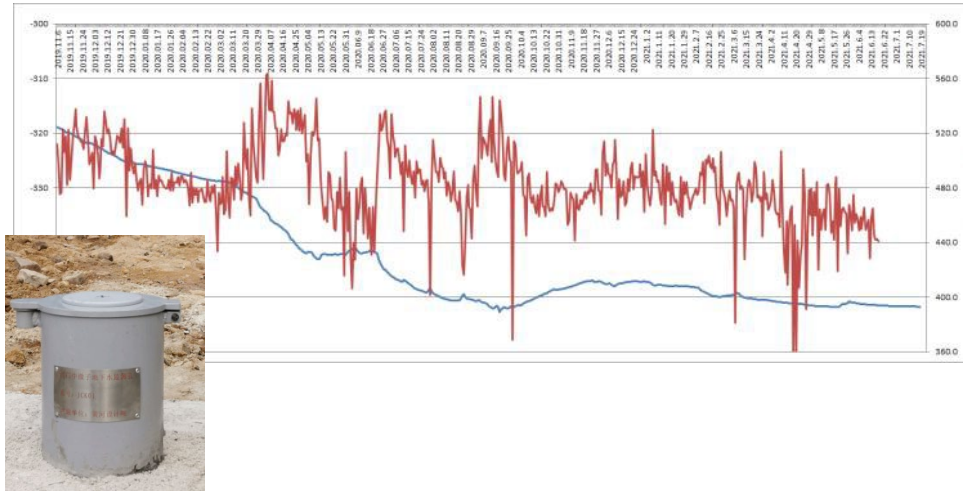

Civil construction finished in Dec 2021

Underground Laboratory status:

- Underground civil construction fully completed
- Almost all the utility (VAC, power supply) completed.
- Underground halls delivered for installation.

A new challenge: keep dust under control

- Experimental hall operated following semi-clean room protocols for the past month
- Routine cleaning on both top and bottom of the pool
- Regular cleanliness level monitoring around the pool with portable particle counters
- A real time particle count monitoring equipment deployed recently to better understand factors affecting the cleanliness level
- Stricter control and full cleaning suits are required next when acrylic vessel installation starts
- In the Experimental Hall we have a stable temperature (~ 18 - 20 ℃) and humidity (60% - 70%).

The cleanliness level is within our requirement →

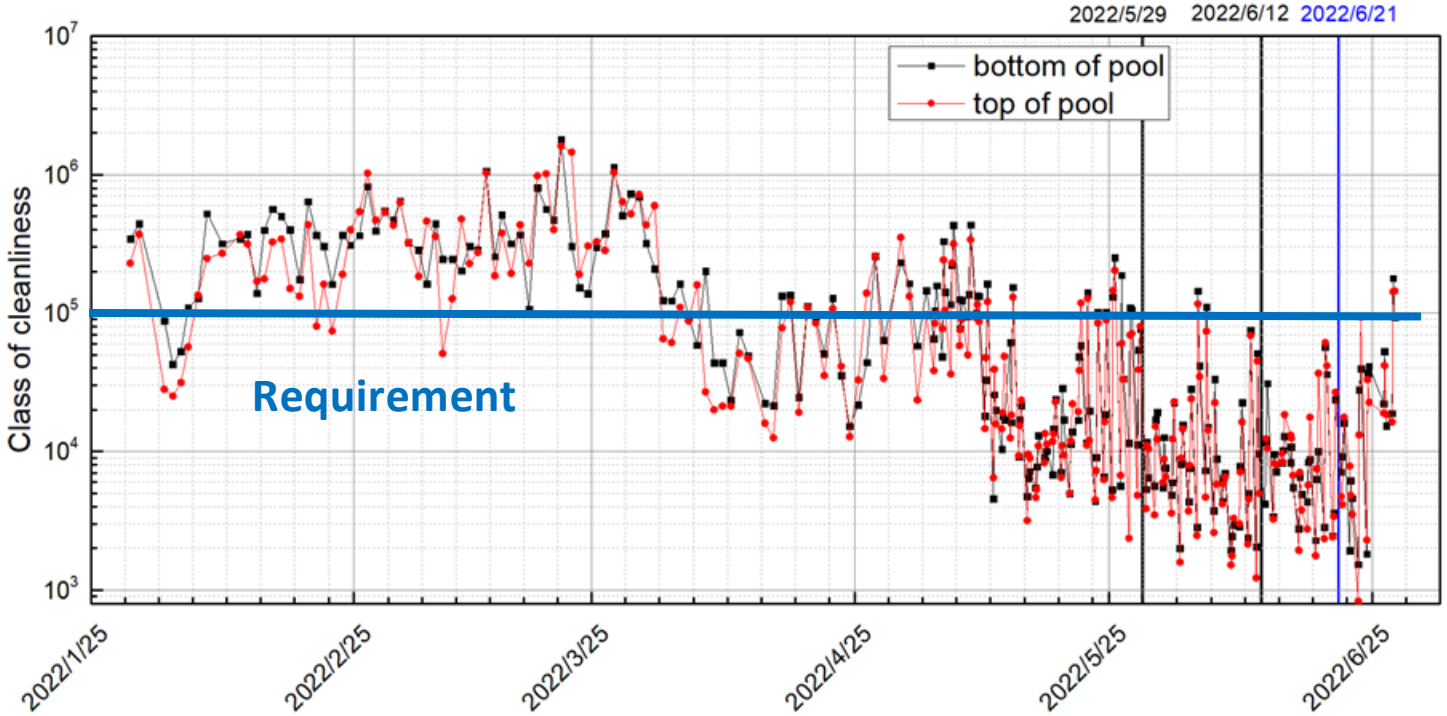

Stainless steel structure: Challenges and Solution

Challenges

- Stainless steel main structure take the loads of acrylic sphere with LS, 20k 20'' PMTs, 25k 3'' PMTs, front end electronics, light separation plate, anti-magnetic coil etc
- Sustain the upward buoyancy
- Underground: ~140k screws connections, to be installed within 3 months
- To maximize PMT number precision should be greater than 3mm

Adopted solutions

- Inner diameter of shell: 40.1 m. Divided into 30 longitudinal and 23 latitudinal layers;
- Material: SS304 with low background
- Weight of shell: ~900 t
- Surface coarsening to increase the friction forces
- High strength screws
- At factory: deeply/totally welding while ensuring the deformation; pre-assembly to ensure the whole structure

SS shell assemble

SS shell assemble

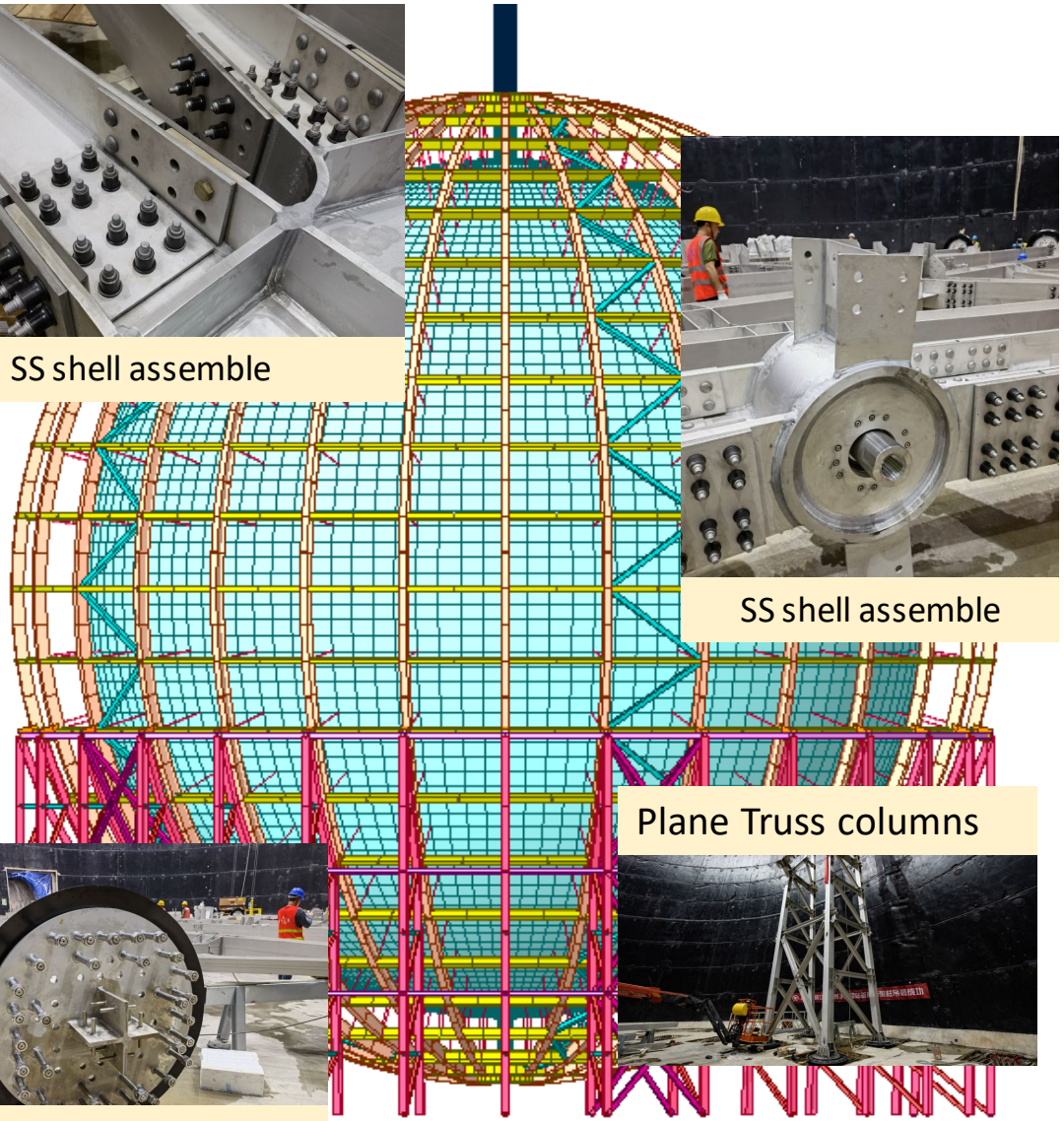

Plane Truss columns

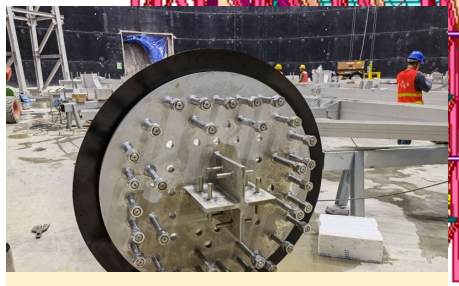

Column assemble

A detail: Connecting rods

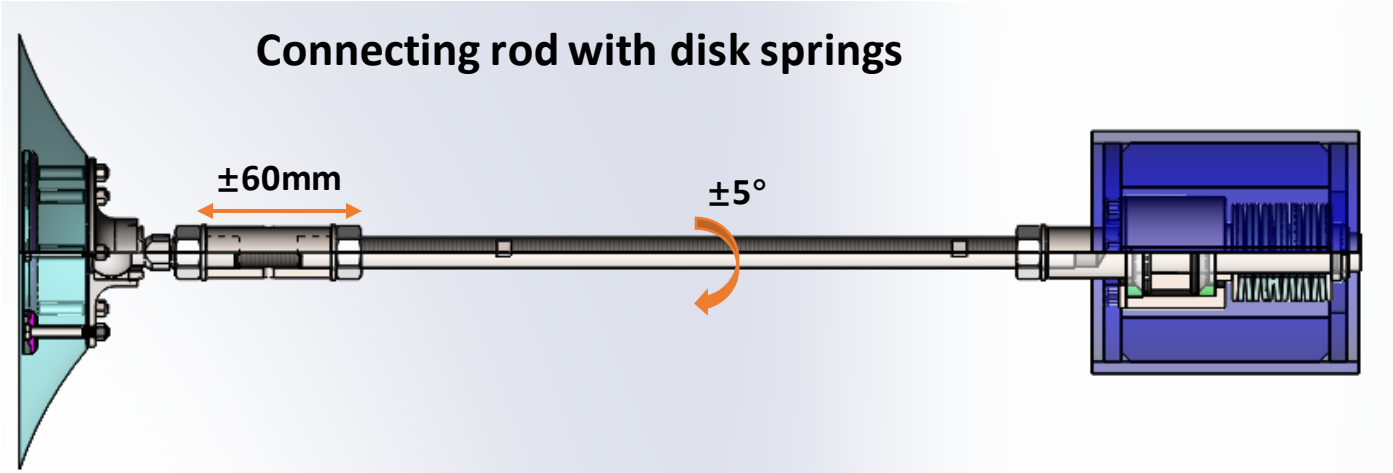

Bearing and disk springs

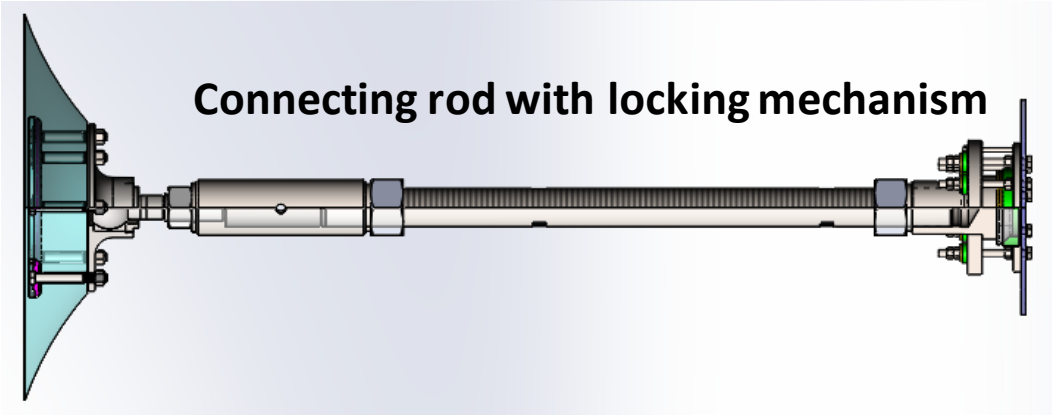

Just bearings

Challenges:

- Sustain the Acrylic detector during the installation
- Reduce the buoyancy during the filling and the data taking

Sometimes we win the challenges with the details

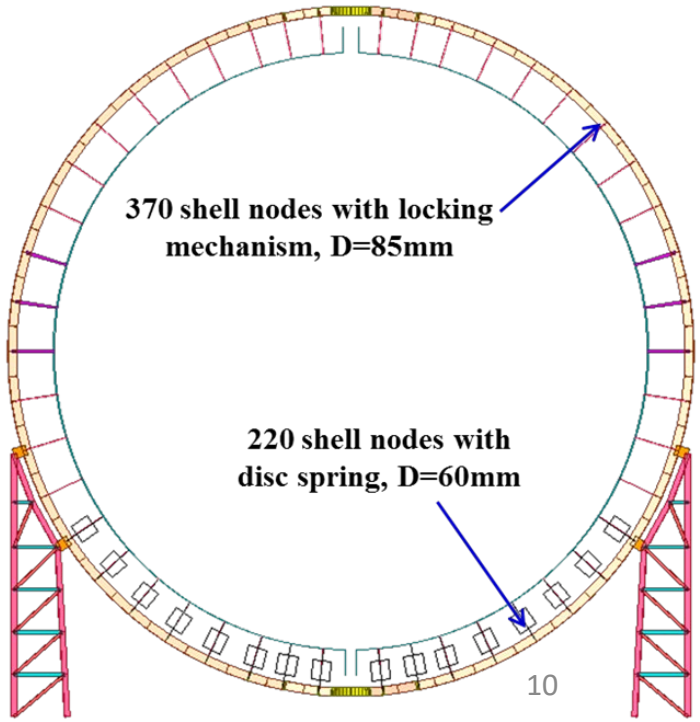

- 590 connecting rods in total
- 370 connecting rods with locking mechanism hinged with acrylic sphere and rigidly connected with latticed shell
- 220 connecting rods with disk springs
- Different disc spring stiffness in different latitude layers
- Assembly precision: < 3 mm for each nod

Acrylic Sphere: reduce the contamination in the CD

Contains liquid scintillator:
Inner diameter: (35.40 ± 0.04) m
Thickness: (124 ± 4) mm
Light transparency: > 96% @ LS
Radiopurity: U/Th/K < 1 ppt
There are total 265 panels + 2 chimneys

The acrylic panels were pre-assembled at the fabrication company to assure the sizing

To reduce the risk of contamination and increase the optical properties each acrylic plate has been:

- Polished
- Cleaned
- Polyethylene (PE) protective film added

The film will be removed before the Liquid Scintillator filling.

Pre-assembly at Donchamp

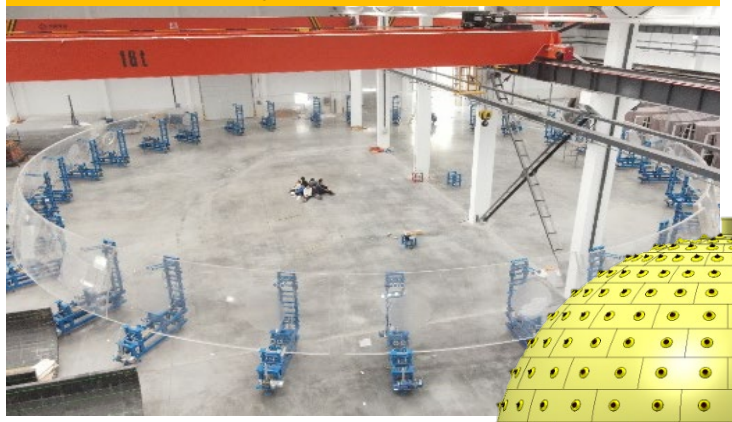

Polishing to increase transparency

50 µm PE film protection

Cleaning to remove dust and debris

Keep the temperature uniform with an active detector

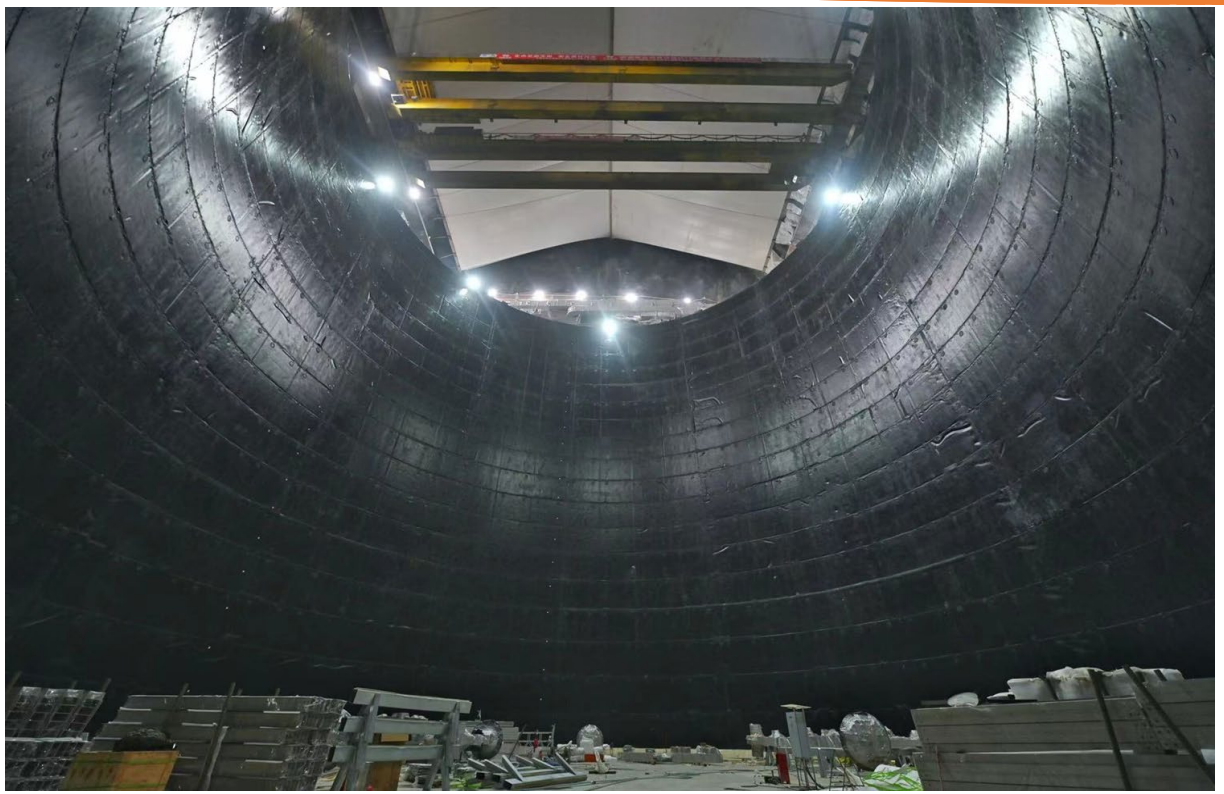

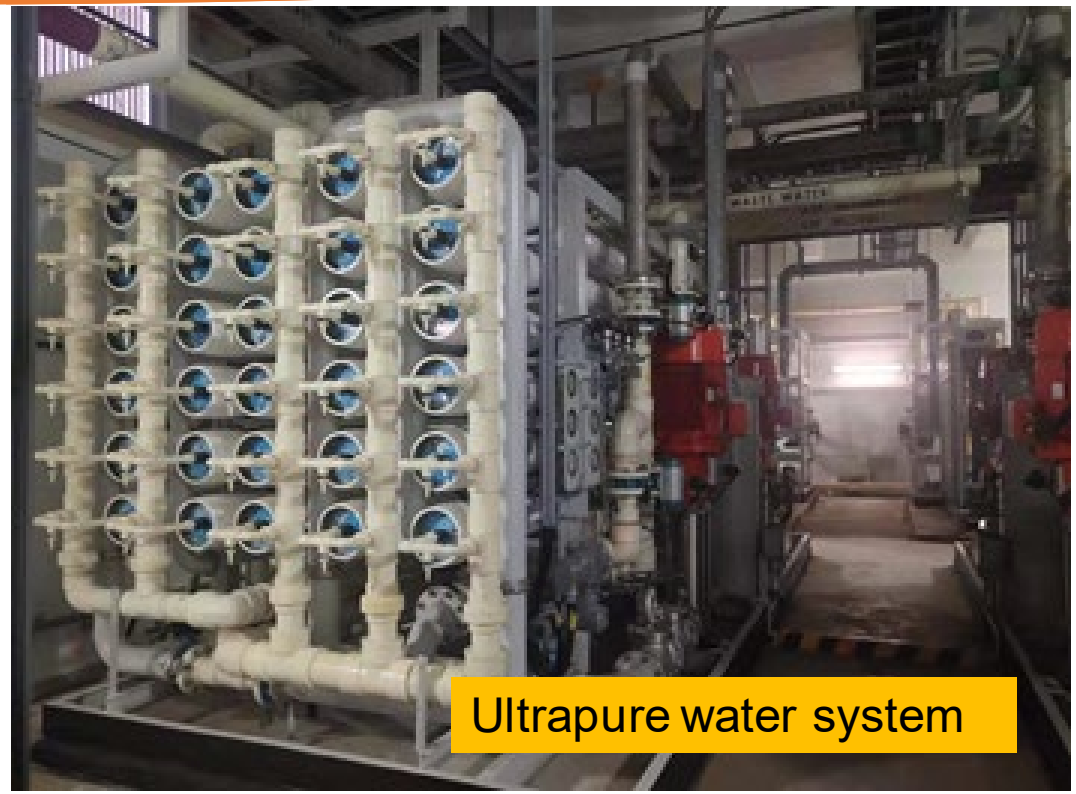

35 kton of ultrapure water serving as a passive shield and muon water Cherenkov detector.

- 2400 20-inch MCP PMTs, detection efficiency of cosmic muons larger than 99.5%
- Keep the temperature uniform and stable at 21°C ± 1°C
- Quality: $^{222}Rn < 10$ mBq/m^3, attenuation length 30~40 m
- 5 mm liner on the wall as Rn barrier

Different tools to control the energy resolution

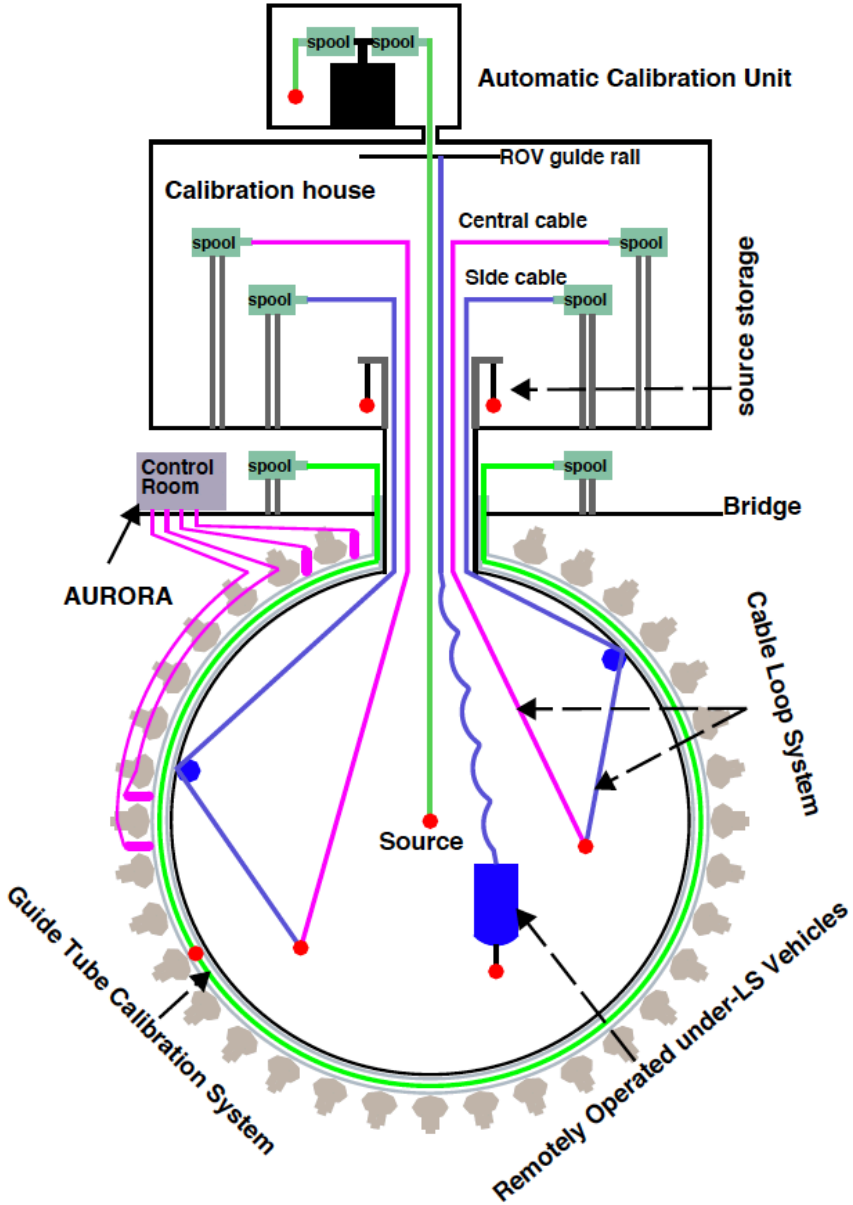

- **Requirements**: 3% energy resolution at 1 MeV and 1% energy scale uncertainty

- Different **tools** deployed for detector calibration:
  - 1D: Automatic Calibration Unit (ACU)
  - 2D: Cable Loop System (CLS) and Guide Tube Calibration System (GTCS)
  - 3D: Remotely Operated Vehicle (ROV)
  - Auxiliary system: Calibration House, Ultrasonic Sensor System (USS) CCD and A unit for Researching Online LSc tRAnsparency (AURORA)

A. Abusleme et al., Calibration strategy of the JUNO experiment, J. High En. Phys. 3 (2021) 4.

See Davide Basilico talk in WG 6

Central Detector Status: Support Installation

Central Detector Status – Lifting Structure

Central Detector Status – SS structure completed

Central Detector Status – Acrylic Annealing

Electronics: maximize the Signal to Noise ratio

Maximize Signal to Noise Ratio for a better Energy Resolution

Solution:
"Wet electronics":
PMT voltage divider
High Voltage Unit (HVU)
GCU 3 PMTs are connected to 1 UWBox/GCU
"Dry electronics":
48 GCUs are connected to 1 BEC through the synchronous link and to 1 switch through the asynchronous link.

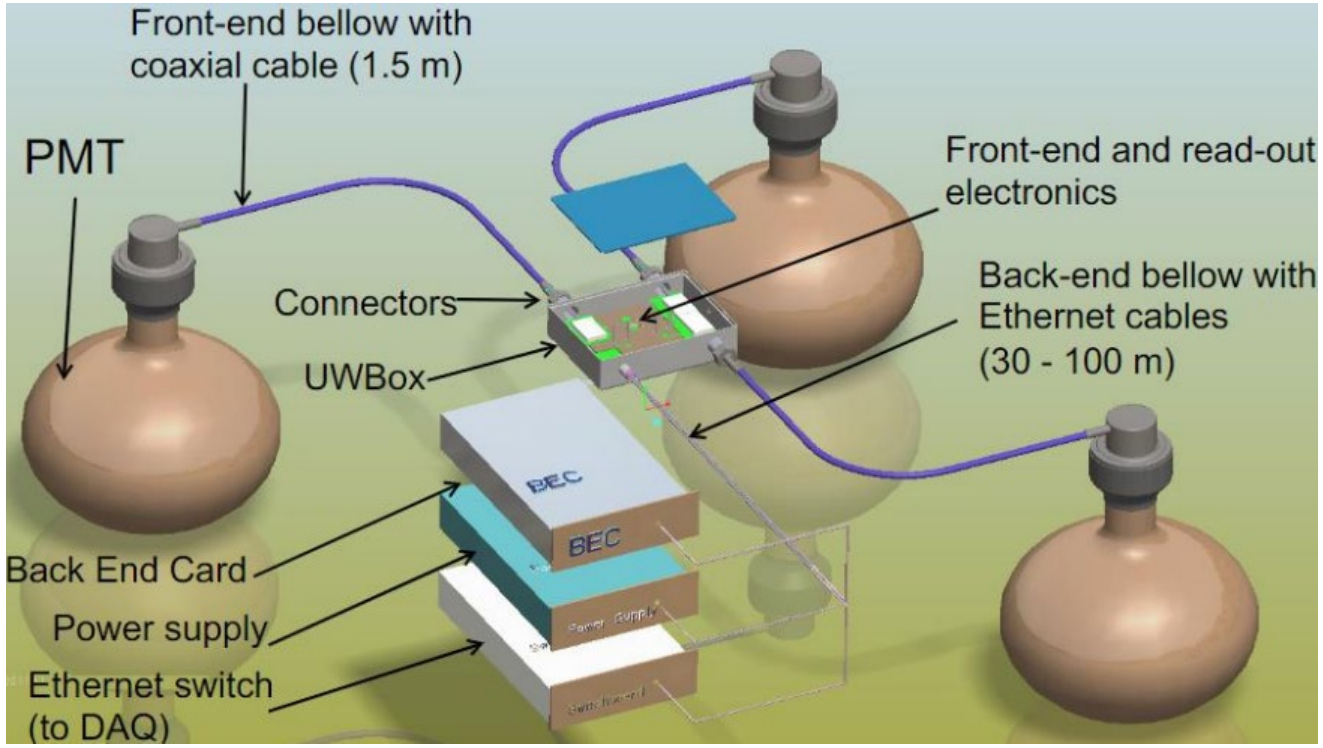

Minimize the failure rate

The Electronics boxes will be not accessible for the entire run of JUNO
The **maximum failure rate** of each independent electronics channel is 95 FIT at 60% C.L. (it means 95 failures happen in 10^9 hours during a product running)

Solution:

- Calculations are being carried on based on different models
- An external review and certification for the GCU (thermal and MTBF analysis, and PCB layout)
- A dedicated laboratory has been setup to perform reliability and aging tests on components
- Redundancy on critical components

Electronics: sophisticated, compact and Underwater

Requirements

- Waveforms sampled at 1GHz with high resolution (12-14 bits) ADC
- High-reliability (no access after installation)
- High precision
- Large dynamic range
- Stand high rates for short times (Supernovae)

Custom HV (JINR) (0-3kV)/300 µA

Custom ADC (Tsinghua) 12bit, 1Gsps

2GB **RAM** for SN BURST

FPGA for Trigger and signal processing

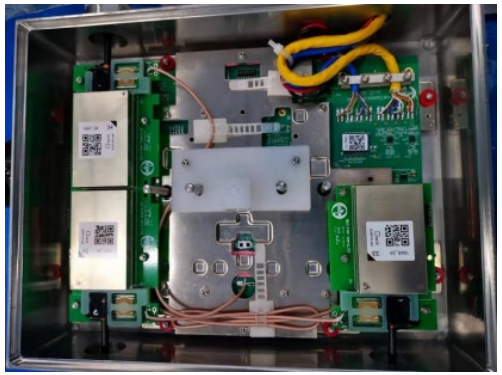

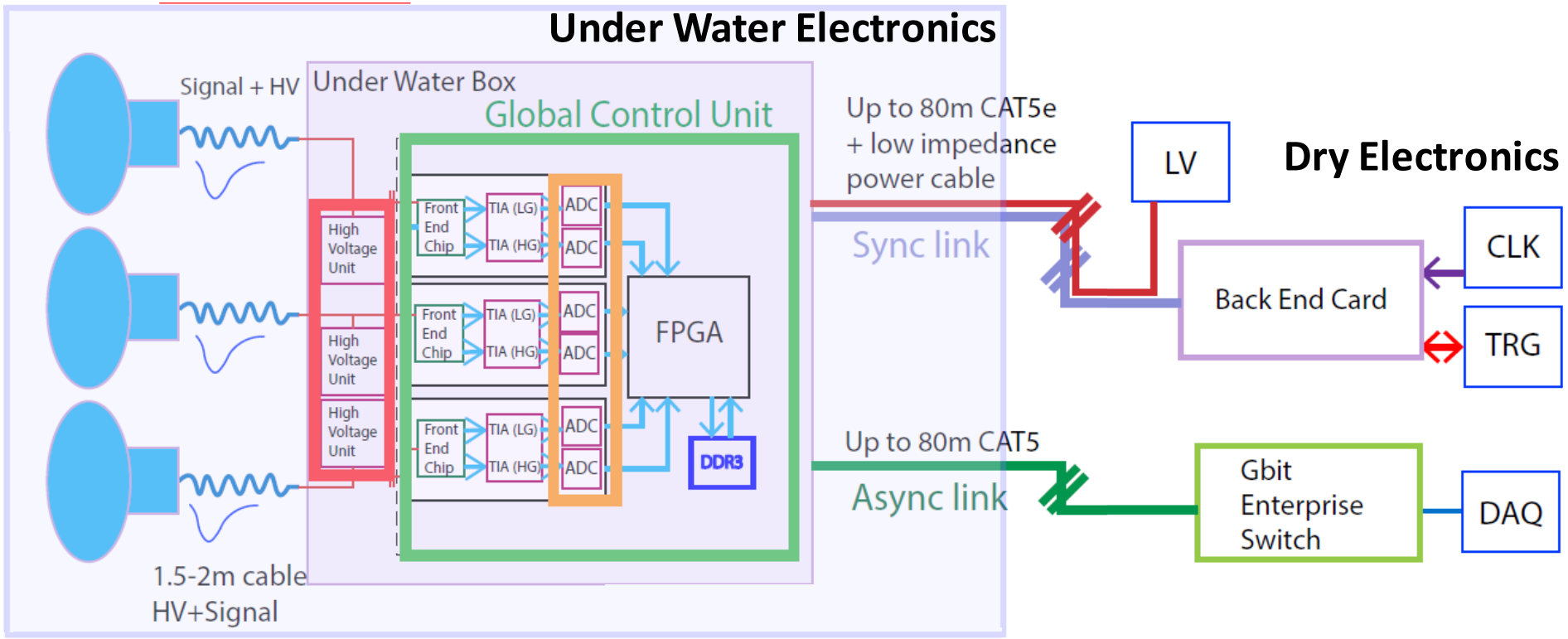

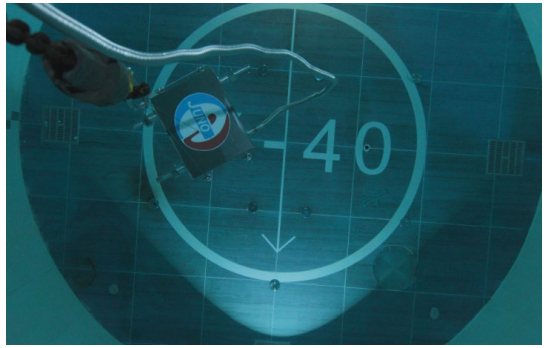

Double Calorimetry: two eyes are better than one?

Large 20-inch PMTs	Small 3-inch PMTs
Large coverage (75%)	Small coverage (3%)
High **Photon Detection Efficiency**: 30.1% for MCP-PMT and 28.5% for Dynode-PMT	**Photon Detection Efficiency**: 25%
High dark rate	Small dark rate and non-linearity
Non-linearity at higher energies	Photon counting (no waveform)
Waveforms -> multiple hits with charge	Higher effective dynamic range

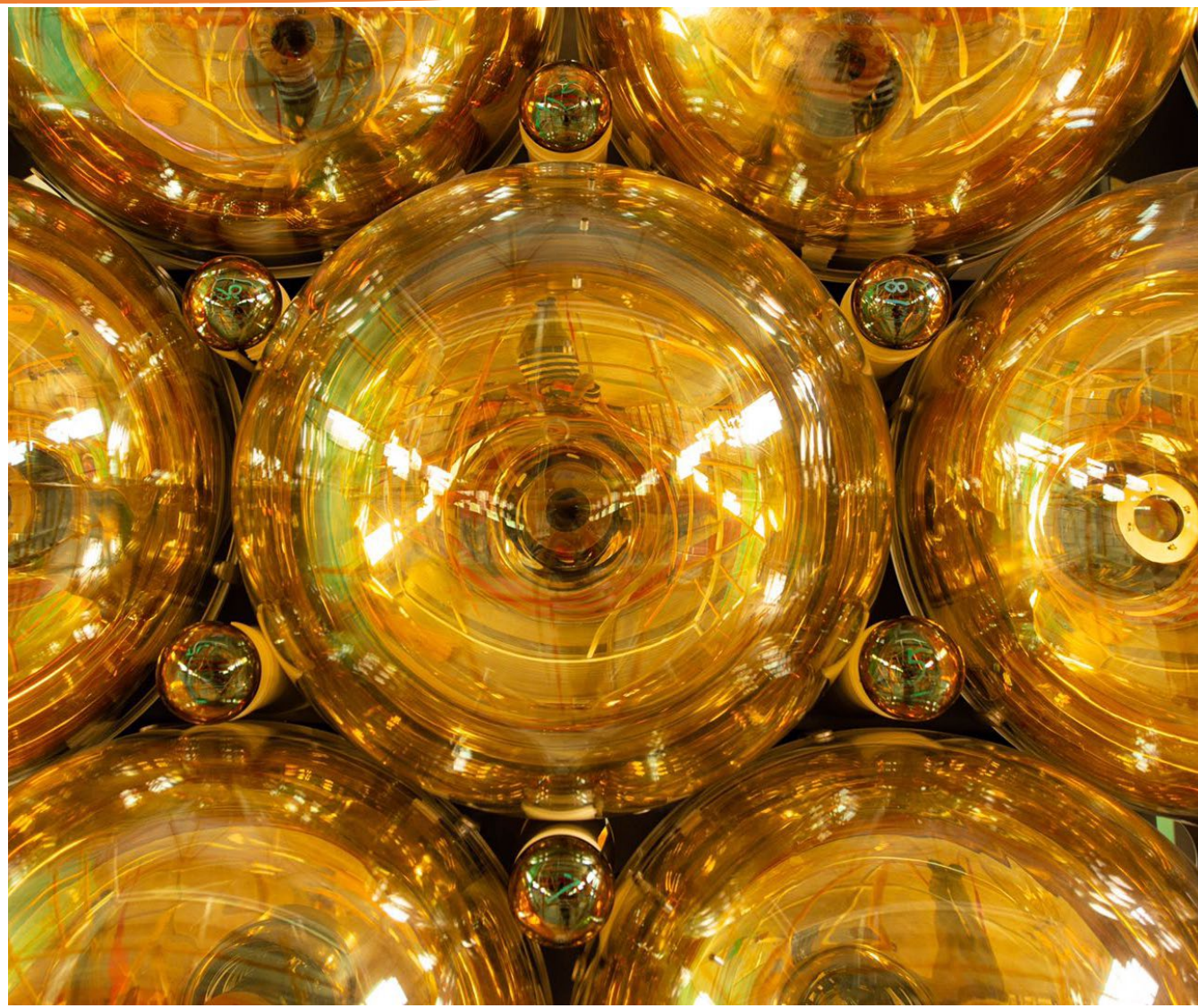

Goals

- **Reduce systematics using the 2 independent systems**
- Muon reconstruction
- Supernovae
- Solar oscillation parameters also with small-PMTs-only

PMT-Assembly: reduce the risk of implosion reaction

Potting

- Three layers of water-tight seals
- SS shell, ABS and Heat-Shrinkable Tube for enclosure and support
- No sealant inside the housing

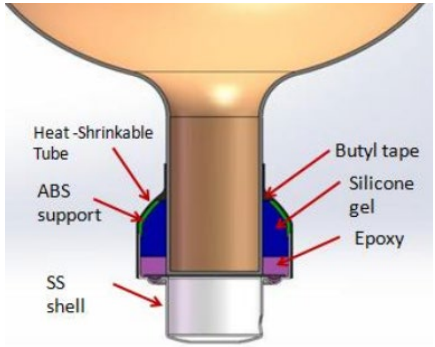

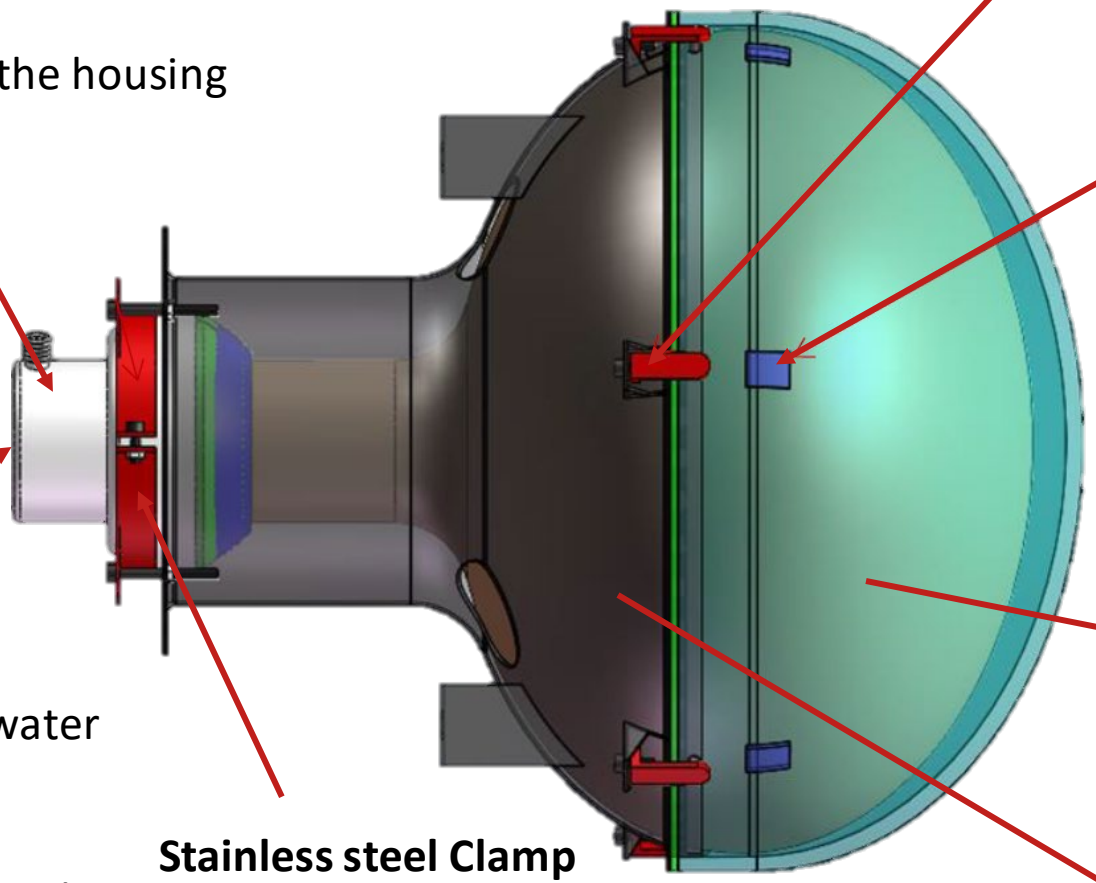

Hook

Fasten the acrylic cover with the stainless-steel cover

Rubber

Spacer between PMT and Cover

PMT Protection

Reduce the risk of the underwater implosion chain reaction and support the PMT

Cable

Cable with HDPE jacket
Compatibility with pure water
Low Radioactivity

Bellows

Insulate cable from pure water
Easy to leak check

Stainless steel Clamp

Connection with the stainless steel structure

Acrylic Cover

Thickness: 9 mm
Transparency >91% @420 nm
Tensile Strength > 65 MPa

Stainless steel cover

Thickness: 2.3 mm

PMT acceptance and characterization

- Acceptance tests to select qualified PMTs
- Characterization: to serve the physics purposes of JUNO
- Data storage (Database, in association with the ID system)
- Industrial scale process

Main Acceptance Criteria:

- Detection Efficiency: >24%
- Detection Efficiency non-Uniformity: <10%
- Achievable Gain: 10^7
- High Voltage @Gain = 10^7: < 2800V
- Peak/Valley:>2.8
- Time Transit Spread: <15ns
- Rise/Falle Time: 1.7 ± 2 ns /12 ± 2 ns
- Dark Rate @ 0.25 p.e.: 20kHz

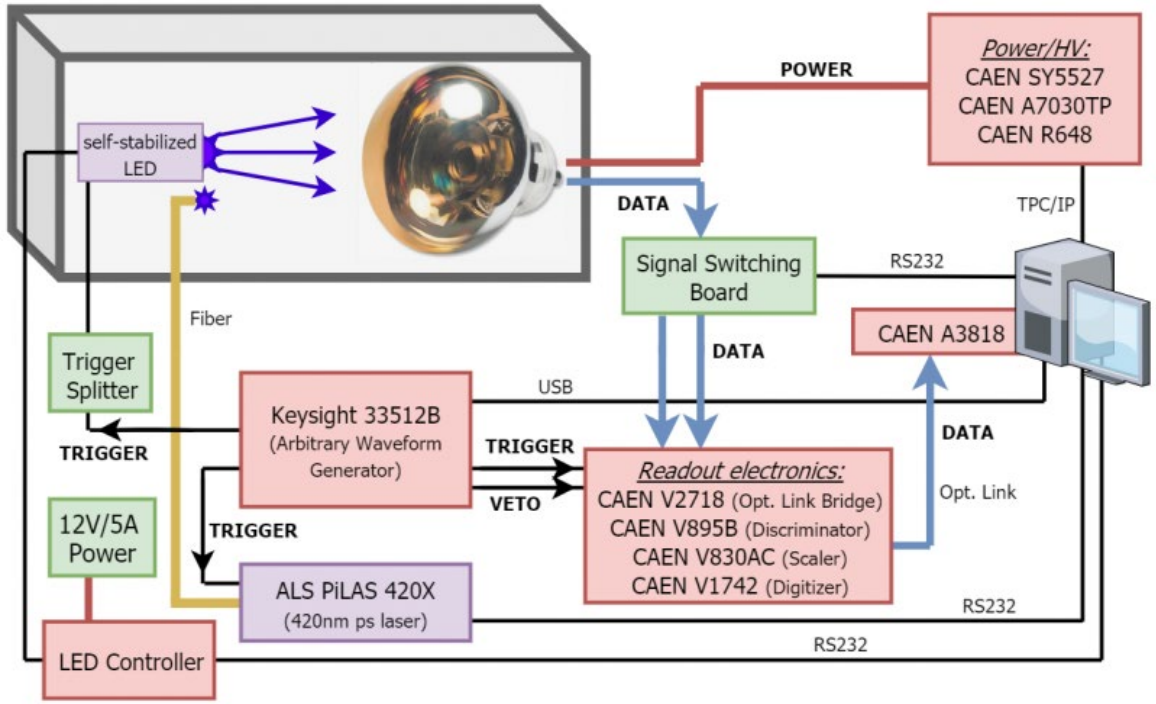

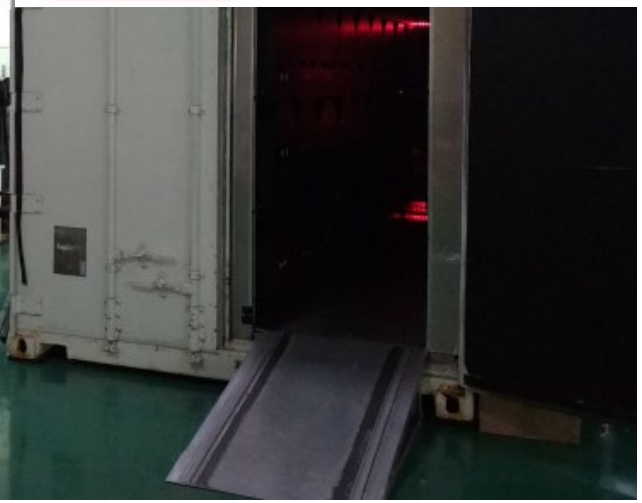

Liquid Scintillator: The technological challenges

Requirement for JUNO Liquid Scintillator (LS)

- High Light yield: **>1345 p.e./MeV**
- Long Attenuation length: **> 20m**
- Low radio-impurity: **^{238}U/ $^{232}Th<10^{-17}g/g$**

The main radio impurities in the liquid scintillator can be divided in:

Heavy Elements: ^{238}U, ^{232}Th, ^{40}K, **Volatile Elements:** ^{222}Rn, ^{85}Kr, ^{39}Ar

- **Alumina Columns**: increase optical properties
- **Distillation:** separate substances with different volatility.
- **Water Extraction:** separate substances with higher solubility in water than in LAB.
- **Stripping:** separate substances with different solubility in a gas stream

Requirements	^{238}U	^{232}Th	^{226}Ra	^{240}K	$^{210}Pb(^{222}Rn)$	$^{85}Kr/^{39}Ar$
Mass Hierarchy	10^{-15} g/g	10^{-15} g/g	-	10^{-15} g/g	10^{-22} g/g	-
Solar Neutrino	10^{-17} g/g	10^{-17} g/g	$5\cdot10^{-24}$ g/g	10^{-18} g/g	10^{-24} g/g	1 μBq/m^3

Recipe:

- Solvent: Linear Alkyl Benzene (LAB)
- Doping: 2.5 g/L PPO (fluor) + 3 mg/L bis-MSB (wavelength shifter).

Technological Challenges

- constant delivery of purified LS
- underground laboratory
- Reduce the risk of contaminating the purified LS

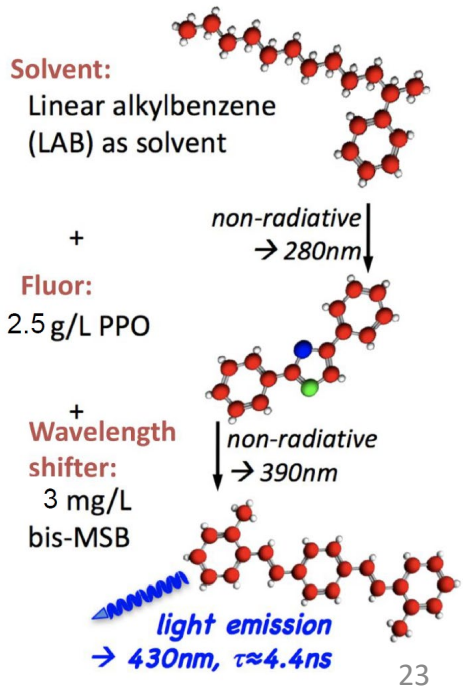

Solution: an industrial scale purification process

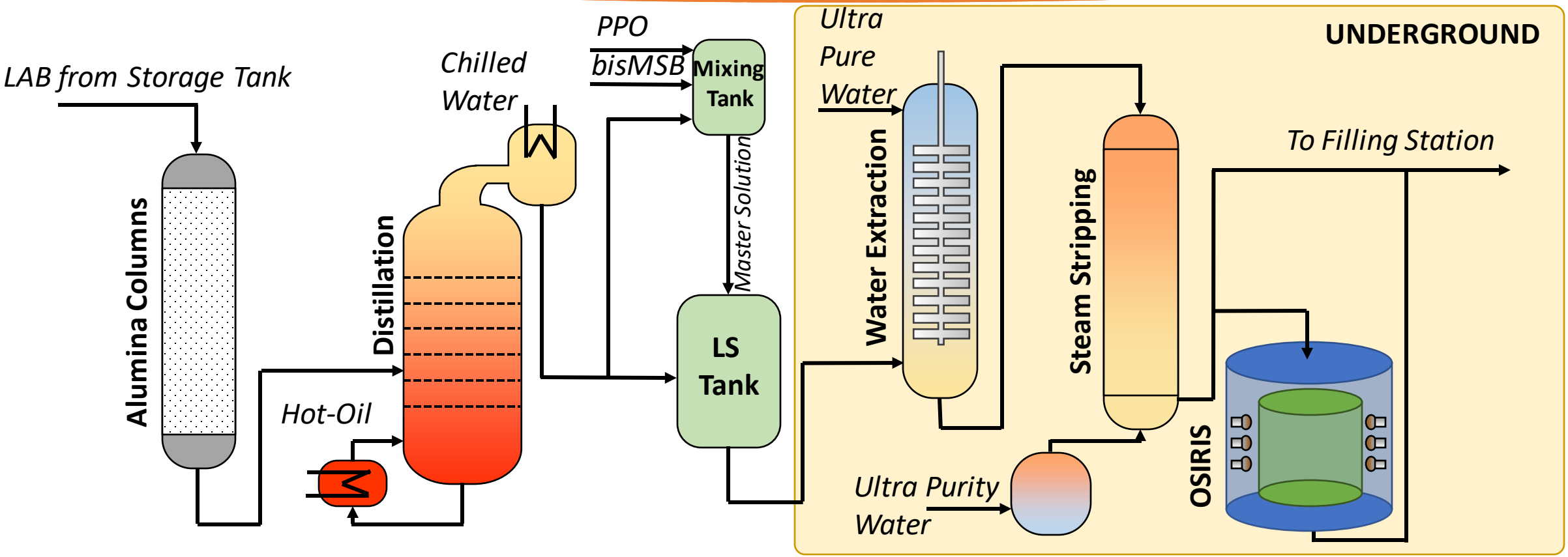

Plant	H. [m]	D. [mm]	Packing	P [mbar]	T [°C]	LAB Flow[l/h]	Other Flows	Status
Alumina Columns	6.0	300	Al_2O_3	~10^4	25	7000	-	DONE
Distillation	4.0	2000	6 trays	10	200	7000	50 kg/h N_2	DONE
Water Extraction	13	1000	Stirrer	300	80	7000	2300 l/h H_2O	ALMOST DONE
Steam Stripping	6.0	450	Unstructured Packing	300	90	7000	60 l/h H_2O steam	DONE

OSIRIS: Is it possible to check on-line the LS quality?

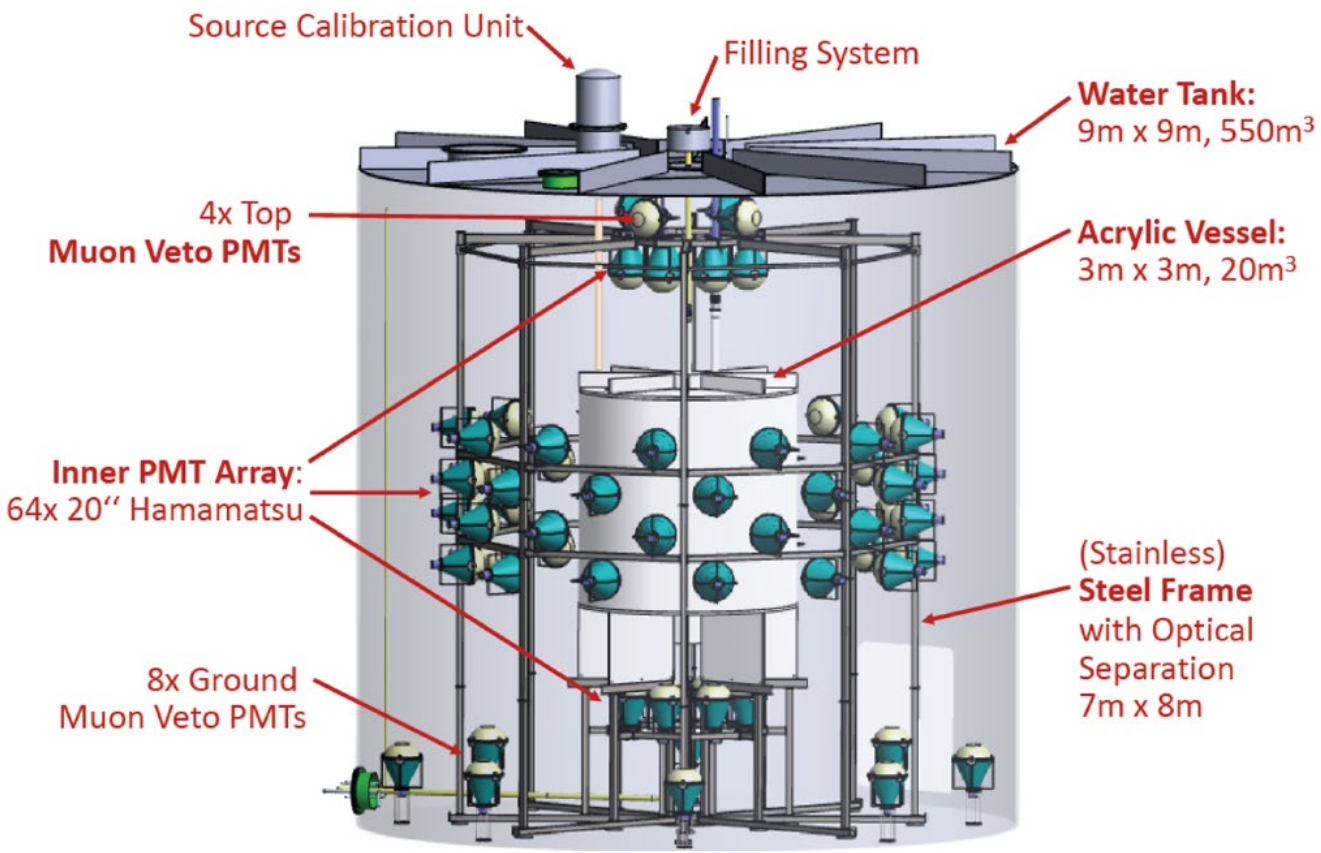

- **Online Scintillator Internal Radioactivity Investigation System (OSIRIS):**
  Monitor the radio-purity during LS filling of the Central Detector
- **Sensitivity**: 10^{-16} g/g for U/Th within 24 h measurement
- **Measure** 19 t of Liquid Scintillator per day (15 % of the daily production will be sent to OSIRIS)
- **Detector**: 81 20'' PMTs for photon Detection and 2.5 m water shielding +12 20'' PMTs

Purification plant status - *LAB Storage tank 5000 t*

Purification plant status - *Alumina Column Plant*

Purification plant status - *Distillation Plant*

Purification plant status - *Mixing Plant*

Purification plant status - *OSIRIS*

Purification plant status - *Steam Stripping Plant*

Purification plant status - *Water Extraction Plant*

Avoid the contamination during the filling

- **Function**
  - Liquid level balance for LS volume change caused by temperature change during operation
  - Online circulation if LS needs to be re-purified
  - High pure nitrogen flush for LS in FOC and CD
  - Long time stability, CD safety, lifetime 20~30 years
- **Requirements**

Dust	^{222}Rn	^{210}Pb	^{85}Kr
< 0.01 g	5 mBq/m^3	2.4 μBq/m^3	50 μBq/m^3

- **Option 1: Water Exchange**
  - Commissioning possible during water and water-LS phase
  - Radio-purity measurement with tens tons of LS (~1m)
  - Large risk on U/Th/Ra/Pb/Kr contamination in LS!
  - All boxes underwater can be operational
  - **No issue to person, nor to the CD**
- **Option 2: Nitrogen Exchange**
  - If High-Pure N2 is used low risk of contamination
  - **Some risk to person and the CD (Tem., pressure)**

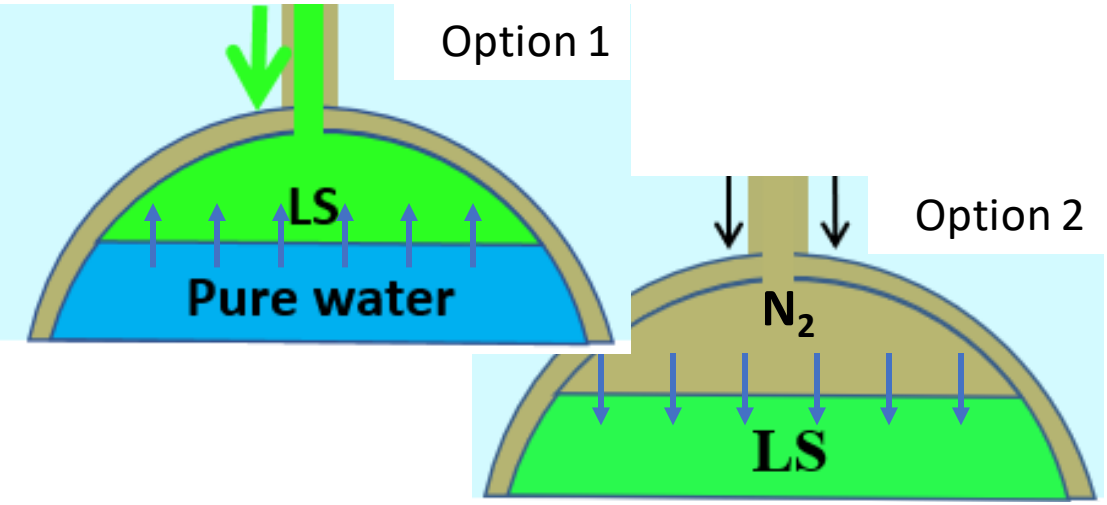

Filling Scheme

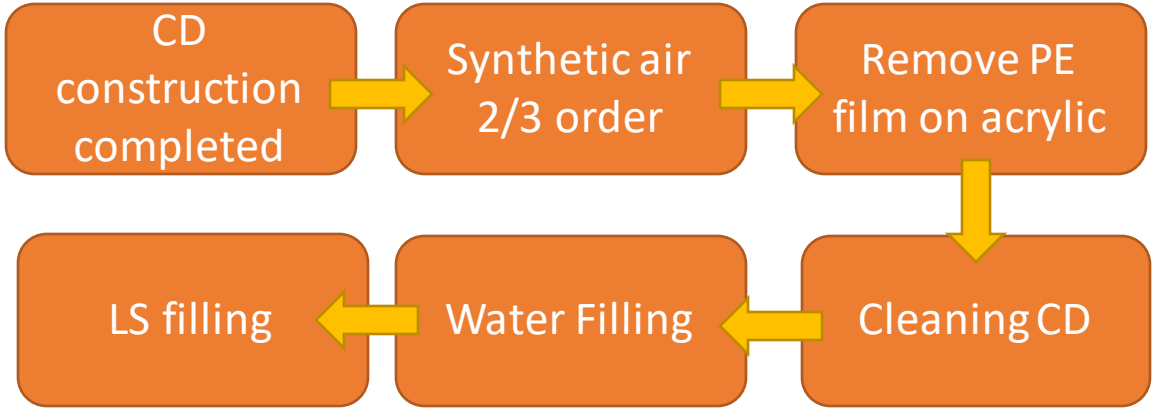

Outlook and Reads

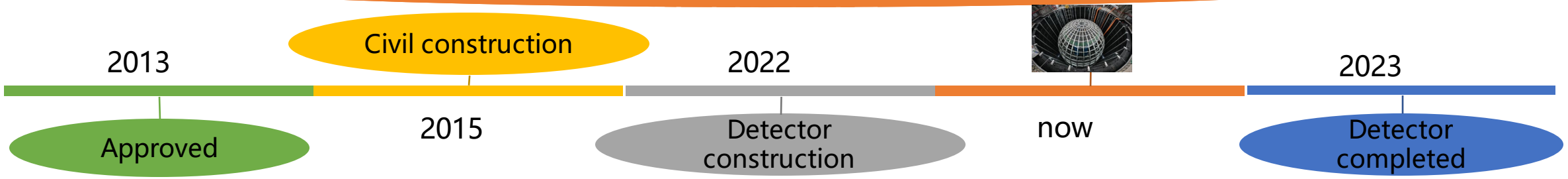

Challenged we won:

- Excavation and building of the Underground Laboratory
- High precision construction of the CD with low radioactive material
- Reliable Under Water Electronics
- PMT assembly designed to avoid the underwater implosion
- LS production system focused on low radiopurity and high optical properties

Waiting for the next challenges

Overview:

Abusleme et al., JUNO physics and detector, *Progress in Particle and Nuclear Physics* Available online 03 December 2021, 103927.

F. An et al., Neutrino physics with JUNO, *J. Phys. G: Nucl. Part. Phys.* 43 (2016) 030401

Detectors:

A. Abusleme et al., Mass Testing and Characterization of 20-inch PMTs for JUNO, arXiv:2205.08629 (2022).

Y. Wang et al., A new optical model for photomultiplier tubes, EPJC 82 (2022) 329.

A. Abusleme et al., The Design and Sensitivity of JUNO's scintillator radiopurity pre-detector OSIRIS, *Eur. Phys. J. C* 81 (2021) 973.

A. Abusleme et al., TAO Conceptual Design Report: A Precision Measurement of the Reactor Antineutrino Spectrum with Sub-percent Energy Resolution, arXiv:2005.08745 (2020), to be submitted to *Journal of High Energy Physics*.

Abusleme et al., Radioactivity control strategy for the JUNO detector, *JHEP11* (2021) 102.

A. Abusleme et al., Optimization of the JUNO liquid scintillator composition using a Daya Bay antineutrino detector, *NIM A*, 988 (2020) 164823.

A. Abusleme et al., Calibration strategy of the JUNO experiment, *J. High En. Phys.* 3 (2021) 4.

Back-UP Slides

Two types of large 20’’ PMTs

Dynode Hamamatsu

5000 in CD

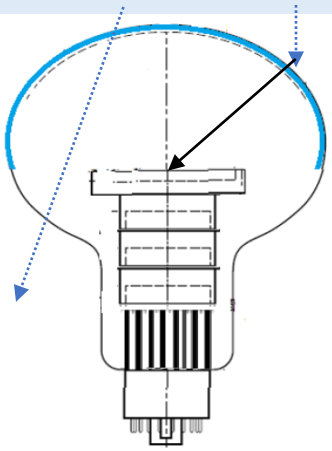

MCP (multichannel-plate) NNVT

12612 in CD and 2400 in veto

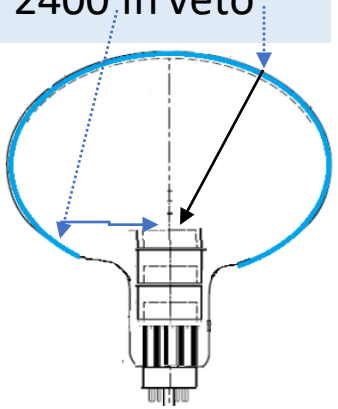

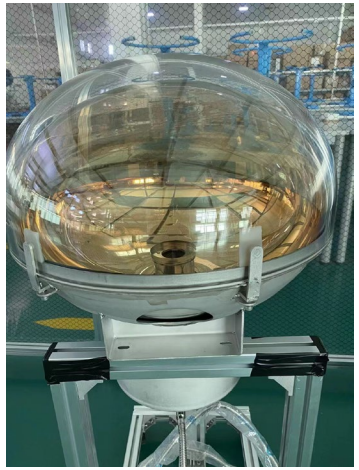

Acrylic cover

Stainless Steel cover

TRANSMISSION ONLY

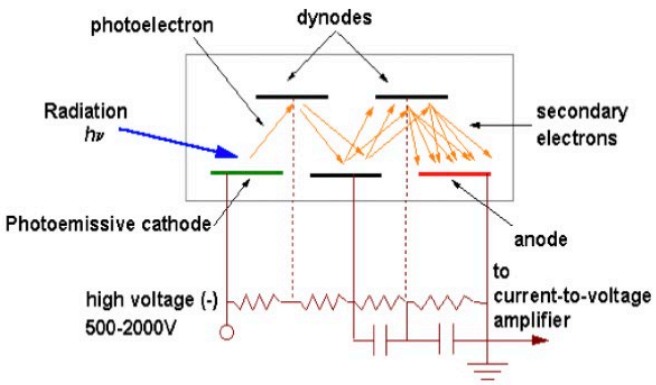

TRANSMISSION + REFLECTION

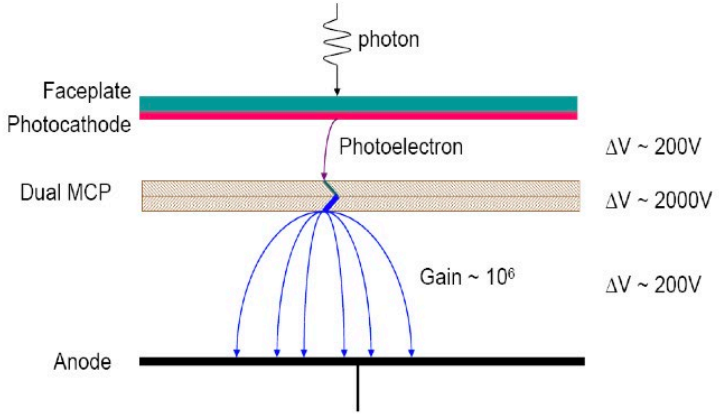

PMT performance

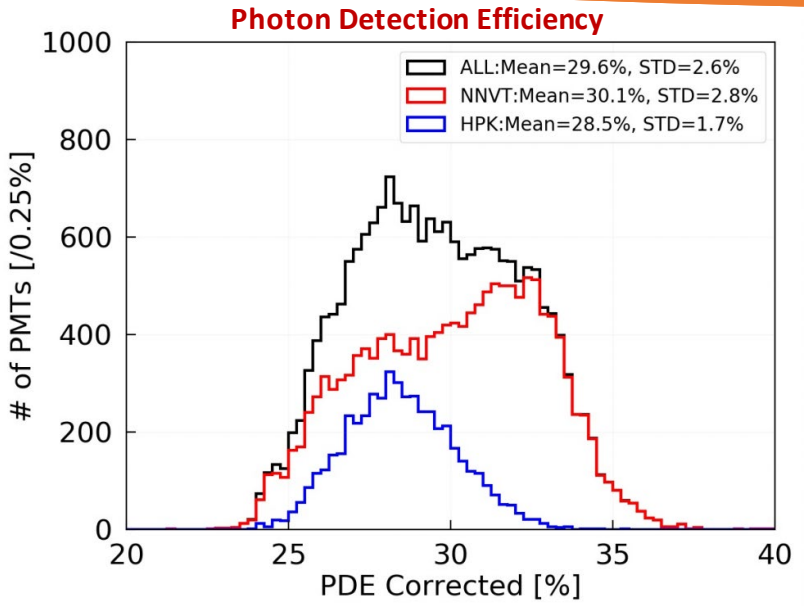

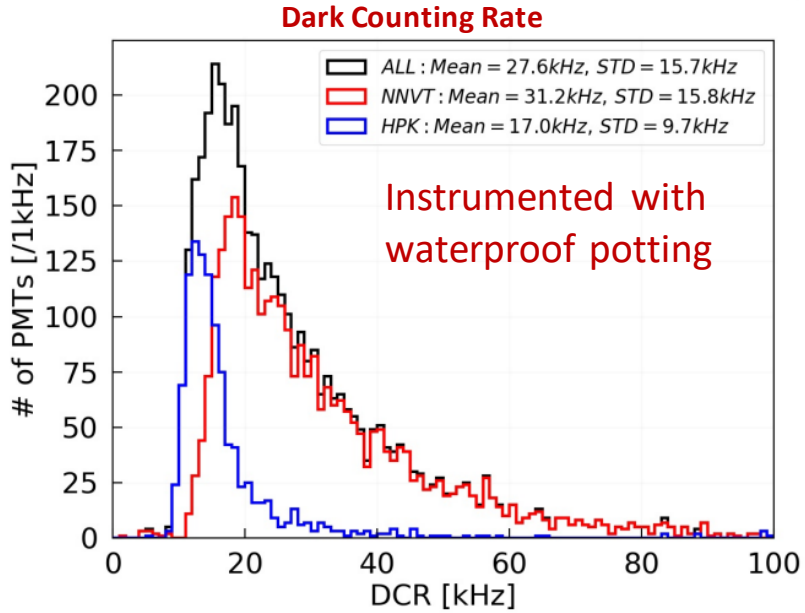

All PMTs are produced, tested, and instrumented with waterproof potting

		LPMT (20-inch)		SPMT (3-inch)
		Hamamatsu	NNVT	HZC
Quantity		5000	15012	25600
Charge Collection		Dynode	MCP	Dynode
Photon Detection Efficiency		**28.5%**	**30.1%**	25%
Mean Dark Count Rate [kBq]	Bare	15.3	49.3	0.5
	Potted	**17.0**	**31.2**	
Transit Time Spread (σ) [ns]		1.3	7.0	1.6
Dynamic range for [0-10] MeV		[0, 100] PEs		[0, 2] PEs
Coverage		75%		3%
Reference		arXiv: 2205.08629		NIM.A 1005 (2021) 165347

12600 NNVT PMTs with the highest PDE are selected for the CD

Purification pilot plant @ Daya Bay

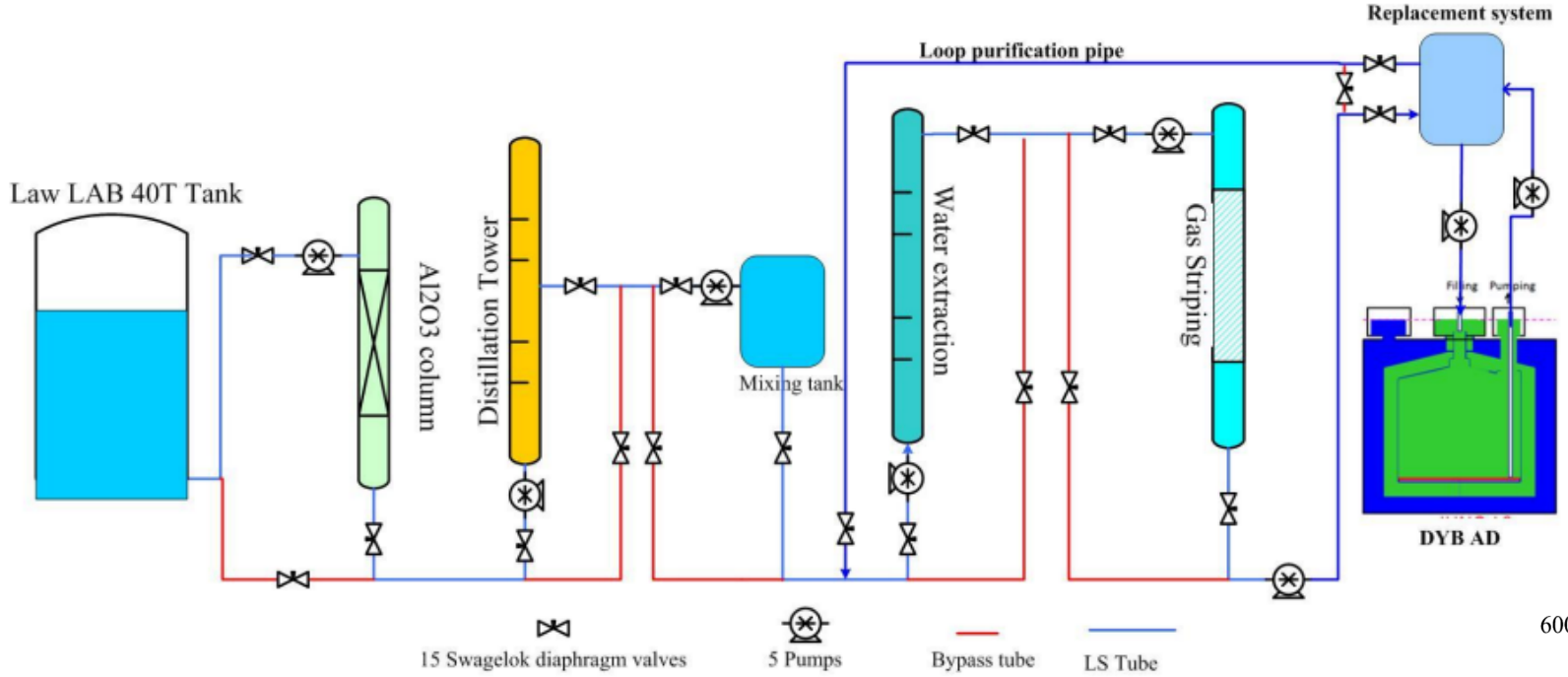

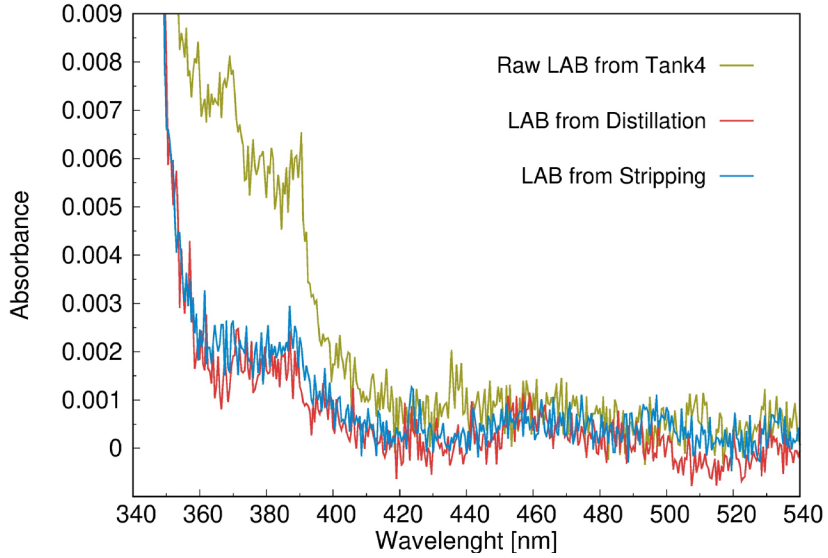

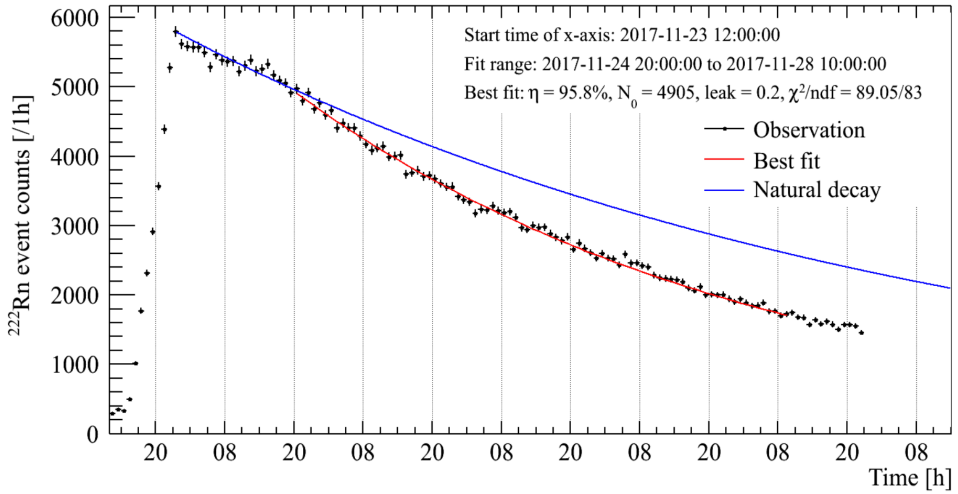

Motivations

- Test the purification tecniques to be used for Liquid Scintillator purification
- Flow rate was 100-150 l/h
- The Attenuation Length was checked after every system and the radiopurity was tested by one Daya Bay detector

PMT-Status

PMT cover production & installation

- About 10,000 acrylic covers have been Produced. Dimension and transparency (10% tested) all qualified.
- Stainless-steel bottom cover production started
- Cover installation is ongoing with a final test of the whole assembly in water

3” PMT instrumentation & electronics

- 70% PMTs potted, 60% tested, to be finished in the middle of 2022.
- ABC production finished
- Small batch electronics components arrived in IHEP, being integrated with UWB.
- Mass production for the rest electronics starts in Feb.-Mar.

PMT Test Plan – Phase 2

All GCU Electronics with the PMT will be tested in the Surface Assembly Building

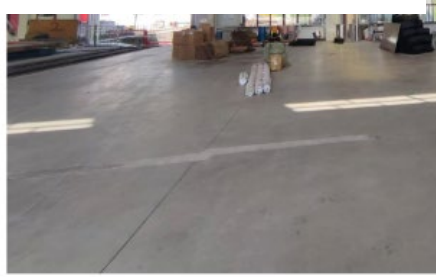

TAO - Detector

Calibration Unit

- Refurbished From DayaBay

Copper Shell

- Support for SiPMs tiles and their electronic readout
- Support of the acrylic sphere
- Support for cooling pipes/cable routing

Design of the structure

- ID: 1884(+2/0)mm
- Thickness: 12±1mm
- Material: oxygen-free copper (TU2), good thermal conductivity, low background, compatible with buffer liquid after pickling
- 2 pieces bolted onsite: transporting allowed

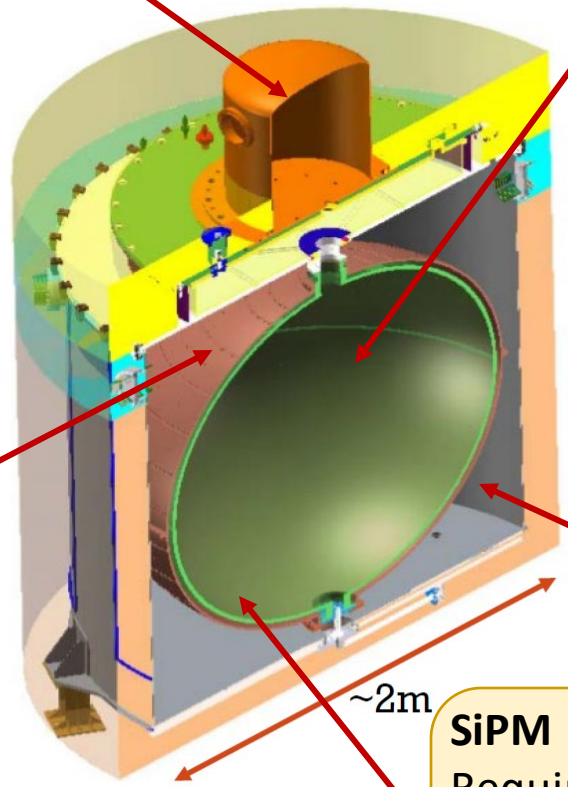

Acrylic Shell containing GdLS

- Same quality as JUNO Acrylic
- D=1800±2mm; T=20 ±3mm
- No anti-UV components
- Transparency: 96%.
- Two CLS anchors are included.

Stainless steel Tank

- Material: SS304
- Inner surface treatment: pickling and passivation
- Contain Buffer liquid (LAB)

SiPM

Requirement

- PDE : > 50%
- Dark Count: < 100 Hz/mm^2
- Coverage: > 94 %
- Timing: ~ ns
- Huge Capacitance
- Power up to 120V

TAO – Liquid Scintillator

Challenges:

- Energy resolution
  - Transparency: keep the same with room temperature (A.L. > 10m)
  - Light Yield: As high as possible (4500 p.e /MeV)
- Safety and long-time testing
  - Stability: compatibility with other material
  - Security: Low toxicity and high flash point temperature (T>100°C)

With additional co-solvent (DPnB) in normal LS, we can improve the solubility of PPO & bis-MSB at low-temperature.

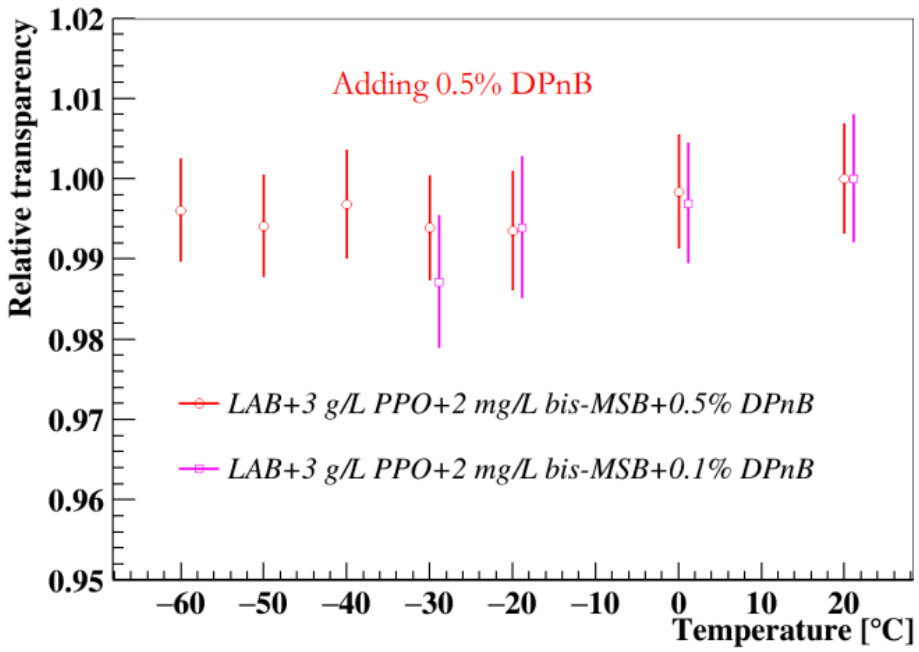

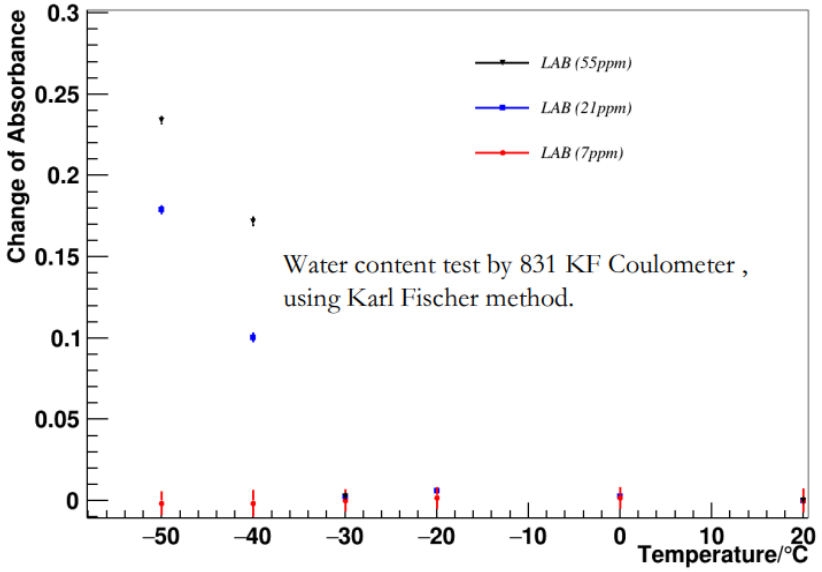

Sample with high water content would be cloudy under low-temperature, causing transparency to decrease

After Nitrogen bubbling

Water content For LAB : ~5 ppm

For Gd-LS: ~20 ppm

JUNO-TAO Recipe :

LAB + 3 g/L PPO + 2 mg/L bis-MSB + 0.5% DPnB