# LHC Crab Cavities

Rama Calaga, CERN

DOE Review, Jul 9, 2012

---

Review comments & Crab workshop summary

Next steps towards a prototype cryomodule

SPS tests preparation

# DOE Review, Jun 2011

**Executive Summary & Recommendations:**

Work with CERN to develop specifications and realistic R&D plan with goals

Complete ODU-SLAC design merge (and Quarter wave cavity)

Prepare a proposal to DOE to fabricate a limited scope cavity

**Comments:**

Adequate funding needed to gain ground on prototyping to stay on course

Increase LARP funding in the next few years to have a significant payoff

# Crab Workshop Nov 2011

Executive Summary: Myers/Collier

RF/beam tests ... before an LHC installation should be carried out in the SPS.
Target for the SPS tests is 2015 and no later than 2016.

Important additional tests require a Point 4 setup with LHC beams.

Collaboration on SPS & P4 test cryostat development (& construction) is a priority.
Joint CM design will be set up, involving cavity designers, CERN and outside cryo experts.

Further studies for machine protection with crab cavities with realistic RF failure signals in conjunction with the upgraded collimation system are required.

**Full summary:**
*https://indico.cern.ch/materialDisplay.py?materialId=paper&confId=149614*

# Planning

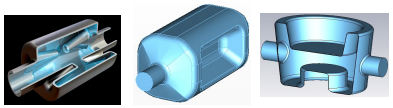

Final Implementation (2022-23?)

**Cavity Testing** | **Prototype Cryomodule** | **Production**

2012 | 2013 | 2014 | 2015 | 2016 | 2017 | 2018-23

LS1 | LS2 | LS3

Cavity Validation | SM18 CM Tests | SPS Beam Tests

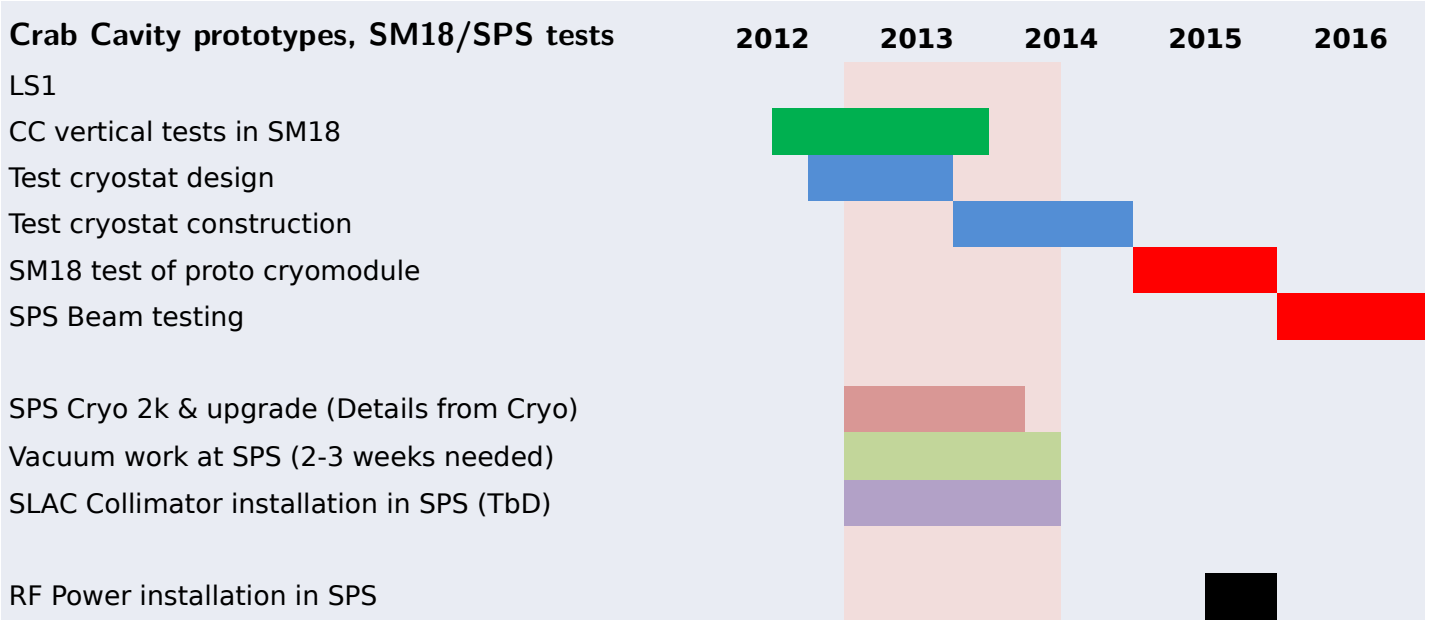

# Basic Parameters

Voltage = 3 MV/cavity (2-3 cavities /module)

Frequency = 400 MHz

Qext = $10^6$, R/Q ~300 Ω

Cavity tuning/detuning ~ ± 1.5kHz (or multiples of it)

RF power source = 60 kW (< 18 kW nominal)

Beam current ~ 0.5-1 A

β-functions at Crab location: 3.8-4.3 km

(Pressure specifications and vessel code, cavity impedance, LLRF, multipole requirements, RF power, cryogenics, tuning specifications, alignment, flanges, He-vessel, HOM power, static B-fields etc.. in a technical specification document soon)

# Performance Chart

Kick Voltage: 3 MV, 400 MHz

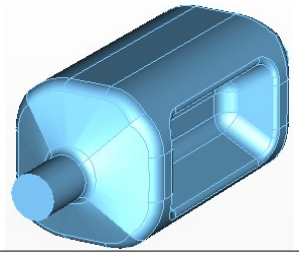
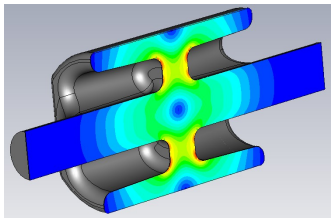
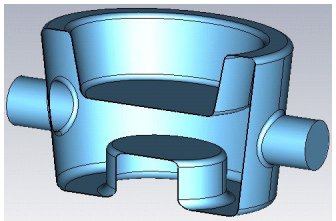

| | | Double Ridge (ODU-SLAC) | 4-Rod (UK) | ¼ Wave (BNL) |
|---|---|---|---|---|
| Geometrical | Cavity Radius [mm] | **147.5** | **143/118** | **142.5/122** |
| | Cavity length [mm] | 597 | 500 | 330-405 |
| | Beam Pipe [mm] | 84 | 84 | 84 |
| RF | Peak E-Field [MV/m] | 33 | 32 | 43 |
| | Peak B-Field [mT] | 56 | 60.5 | 61 |
| | $R_T/Q$ [Ω] | 287 | 915 | 345 |
| | Nearest Mode [MHz] | 584 | 371-378 | 657 |

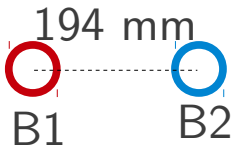


$< 50$ MV/m

$< 80$ mT

# Present Status

UK 4Rod cavity

- Niobium cavities finished
- Chemical surface treatment (now at Niowave)
- Heat treatment and testing at CERN (Aug 2012)

EuCARD (+CERN)

ODU-SLAC Dbl ridge cavity

- Niobium cavities finished
- BCP & testing at Niowave & Jlab (Jul 2012)

BNL Quarter Wave Cavity

- Call for fabrication released
- Cavity expected before the end of the year

LARP + SBIR/STTR

# 4R Prototype

Courtesy: G. Burt, Niowave

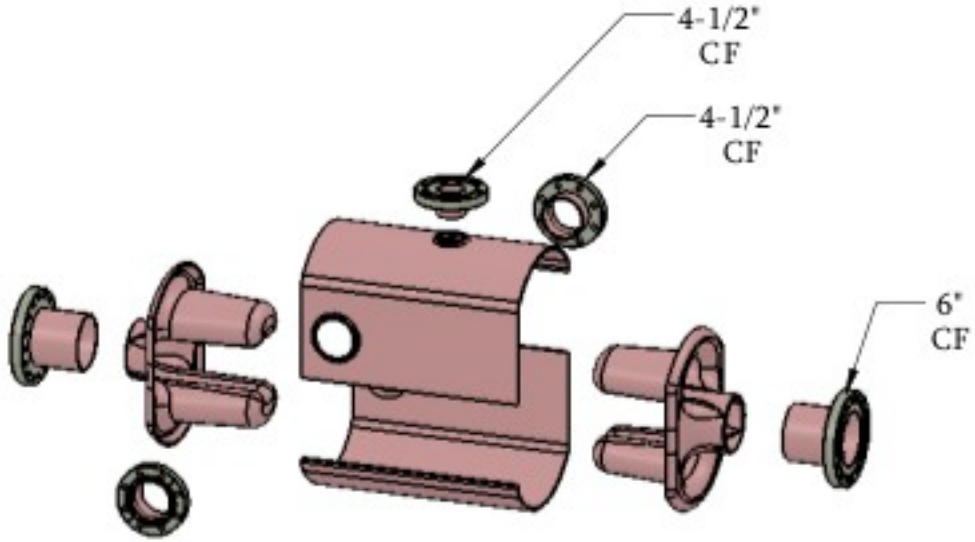


Nb rods from solid Ingot via EDM
(significant material saving)

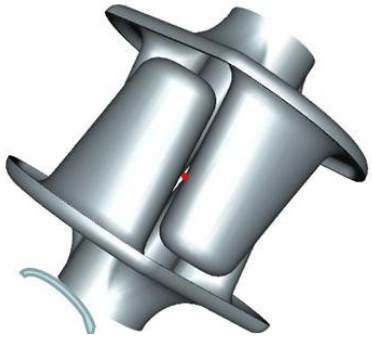

Cavity shipped to CERN (end of July)
for surface treatment & testing

# ODU-SLAC: Double Ridge

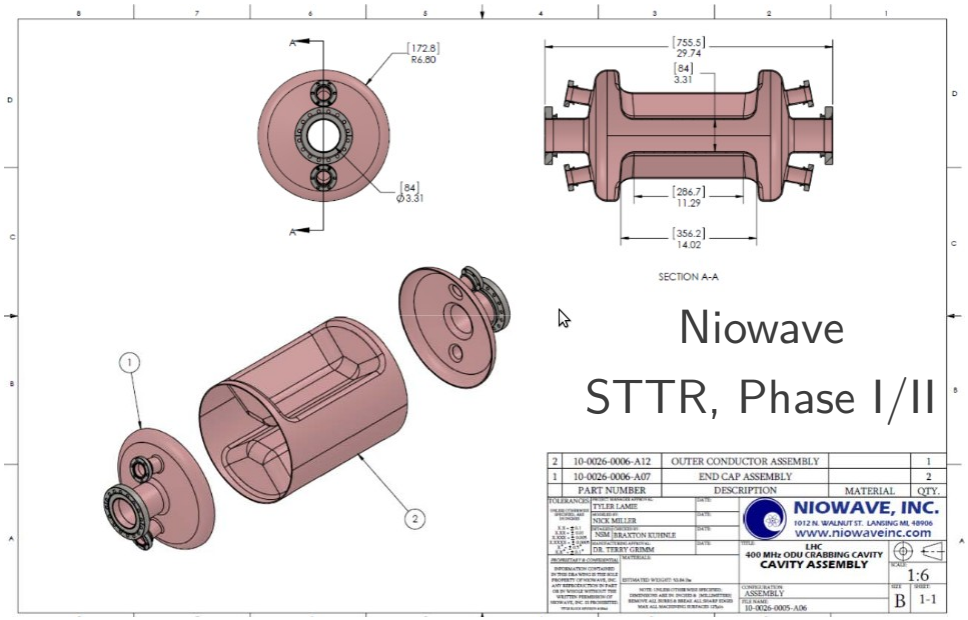


Courtesy:J. Delayan, Niowave

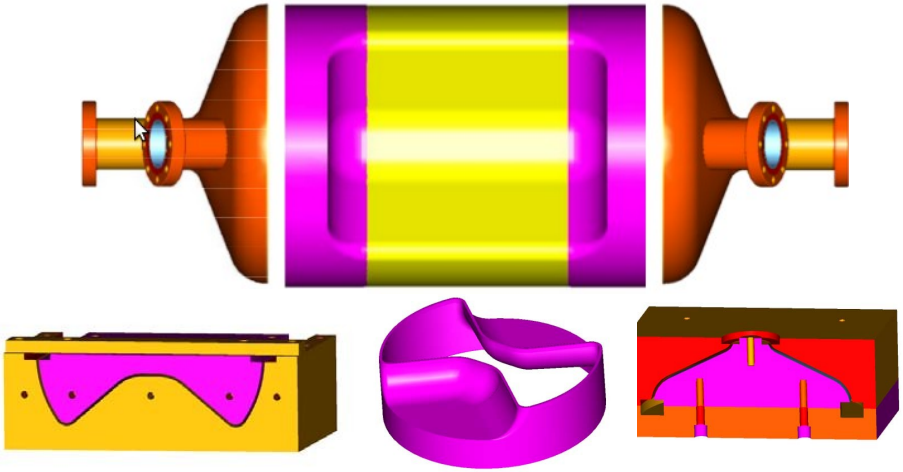

Jan 2012

May 2012

# ¼ Wave Topologies

I. Ben-Zvi et al.

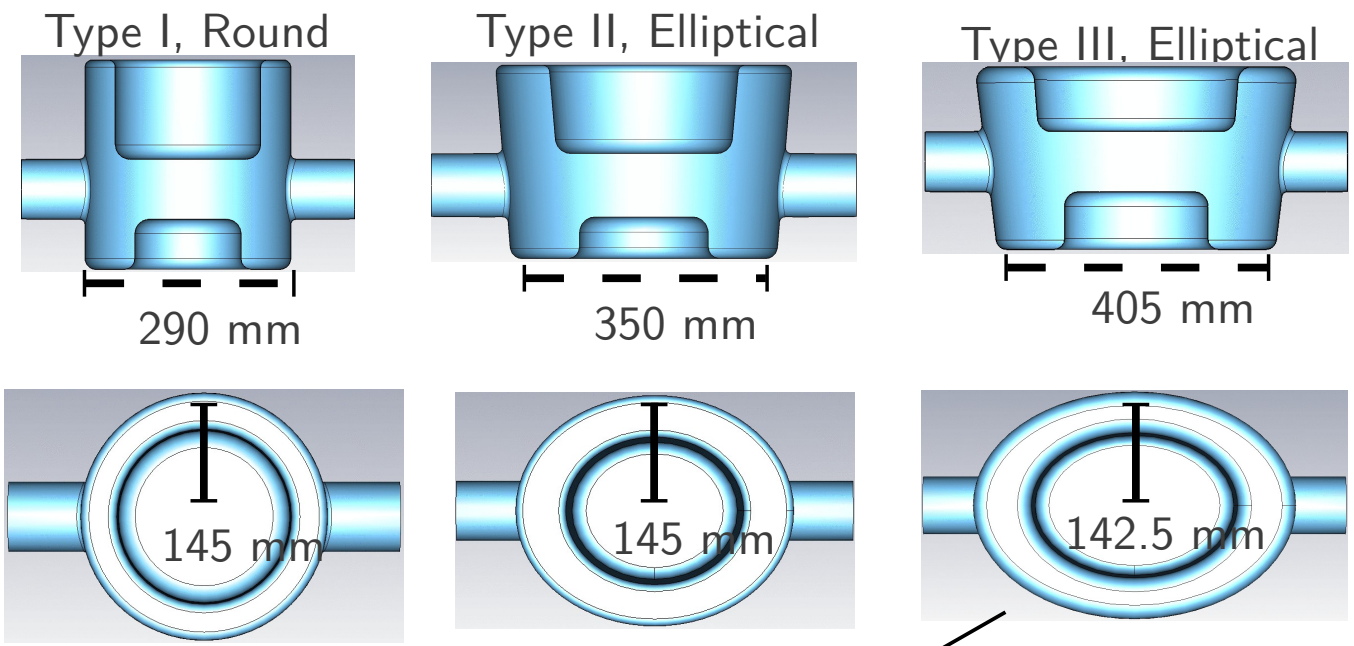


Presented at IPAC12 & CM18

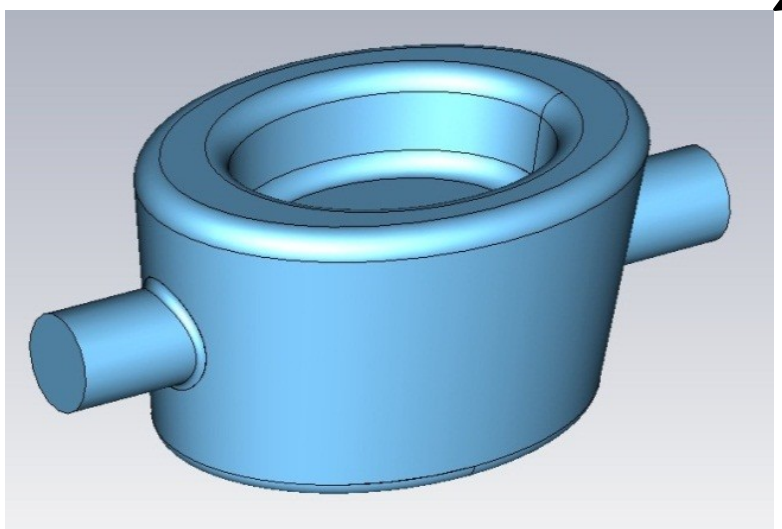

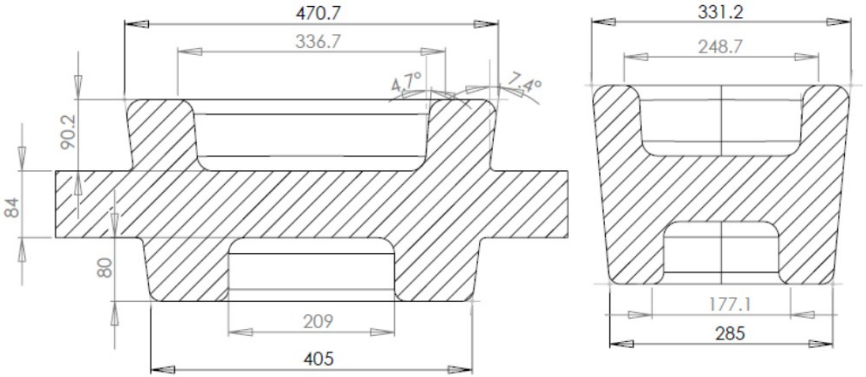

# Asym Vs Sym ¼Wave

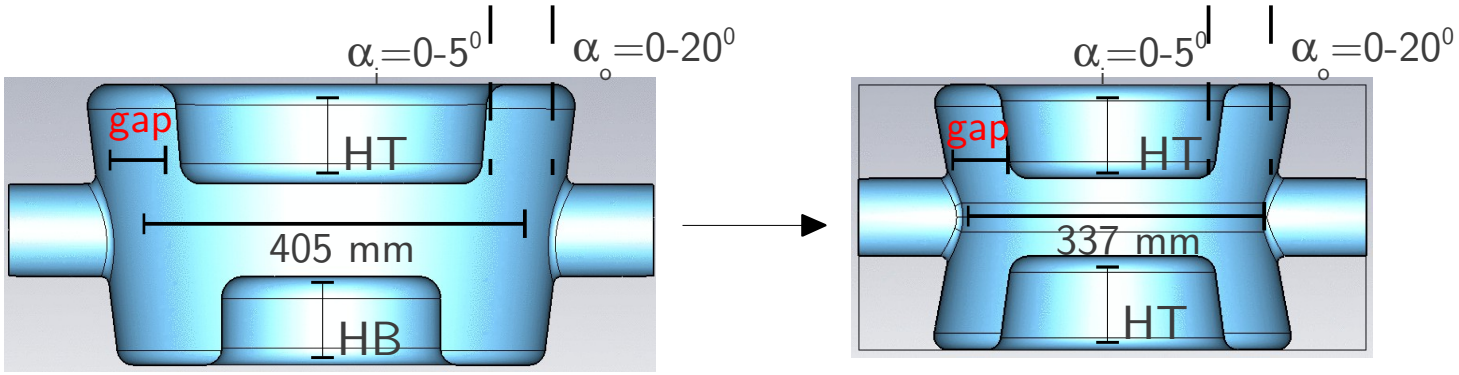


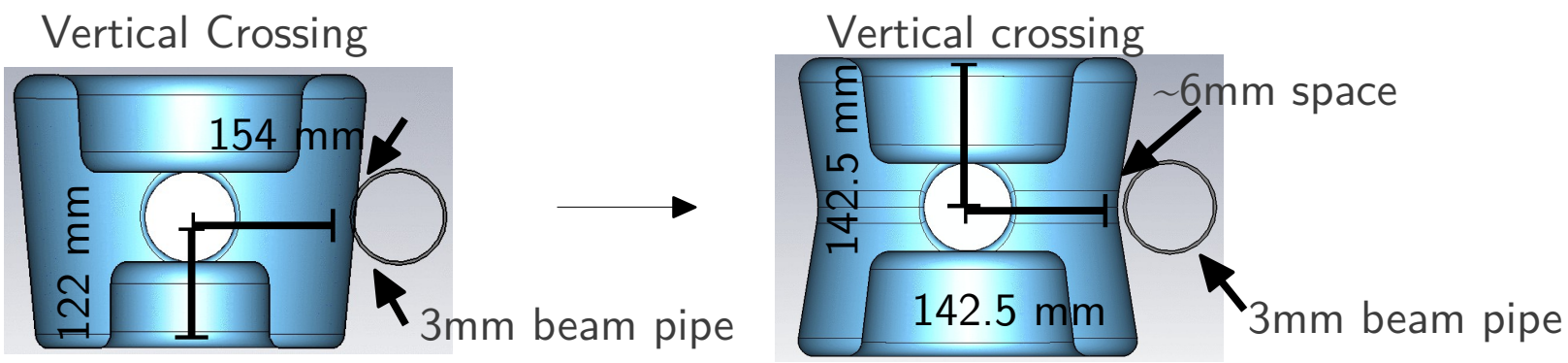


| | Type III, Asym | Type II, Sym |
|---|---|---|
| Epk | 43 MV/m | 32.3 MV/m |
| Bpk | 61 mT | 57.3 mT |
| Vacc | 120 kV | 0.0 V |
| 1$^{st}$ HOM | 657 MHz | 582 MHz |

Symmetric structure to be fabricated by the end of the year

# Prototype Vertical Testing, SM18

Aim:

- Field tests of all 3 cavities by summer 2013
- Characterization of surface properties
  - Multipacting, optical inspection, additional processing
- Field ramping, cycling, stability and quench margin

CERN Preparations for SM18 tests

- BCP of the cavities, EP is needed but not easy due to geometry
- High temp vacuum baking + HPR
- RF Power: Recuperating 400 MHz tetrodes used for LHC-RF
- Cryo: Existing (2-4K) + a new dedicated 2K cryostat in 2013
- Instrumentation: RF, second sound, T-mapping & optical
- LLRF & services: Mostly exist from present testing

# Example: Cavity Quench

H. Padamsee et al., PAC95

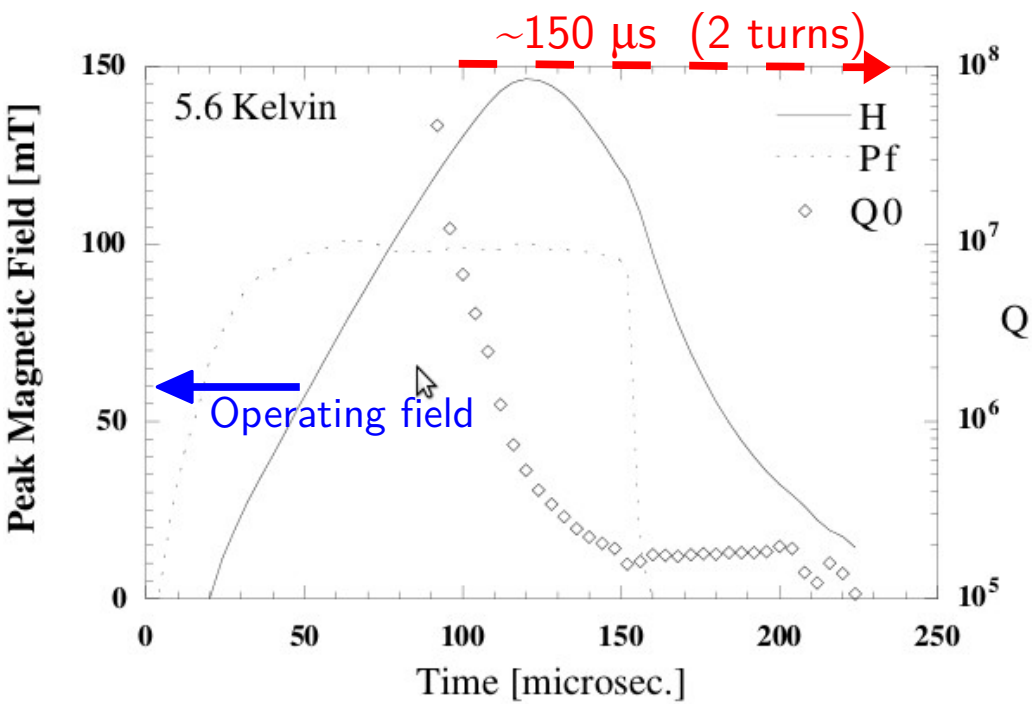


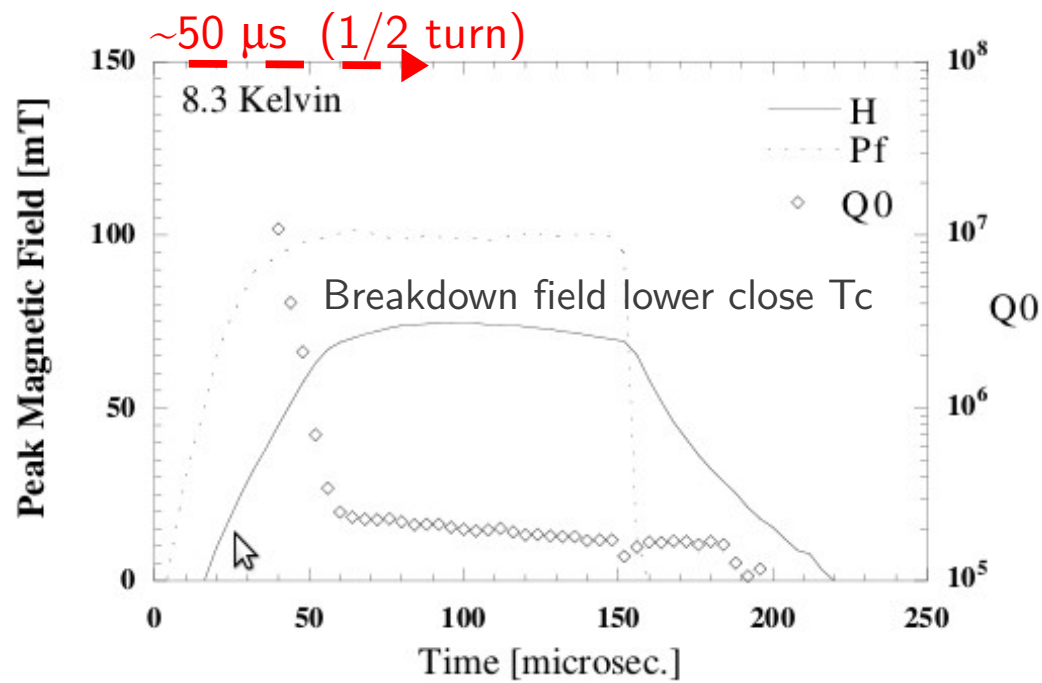


Transient cavity Q meas. from high power RF pulses → thermal breakdown

- Nominally performed during cavity processing ($T_{start}$ 2K)
- Determine the "$H_c^{RF}$" limit for 2K

LARP contribution to either quench studies and/or **machine protection**, highly desired

# CERN SM18 Facility & Upgrade

Courtesy: J. Chambrillon, K-M. Schirm

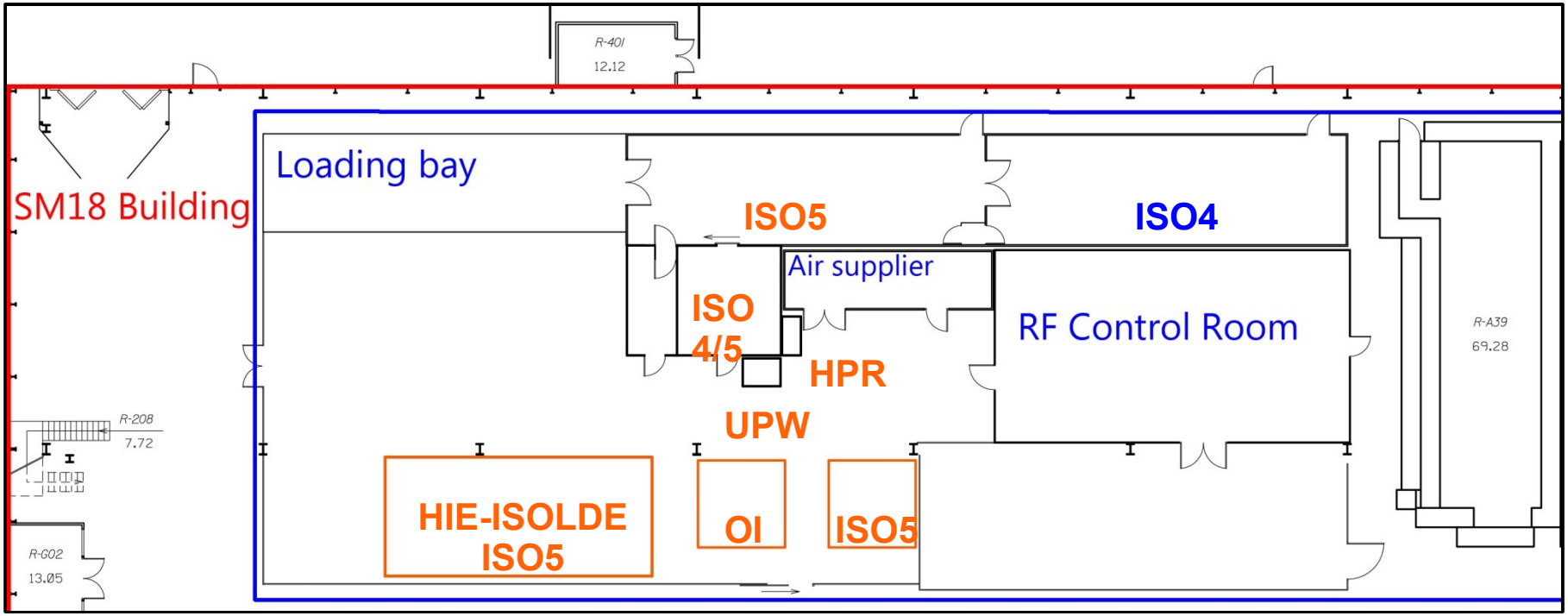


3D bead-pull

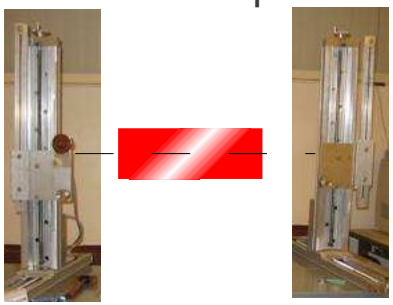

Optical Telescope

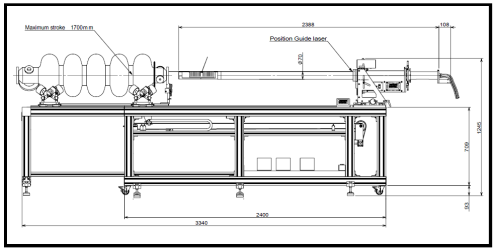

T-Mapping + 2nd Sound

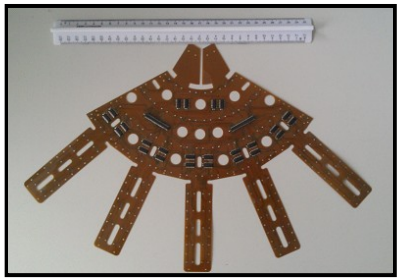

Test Stand

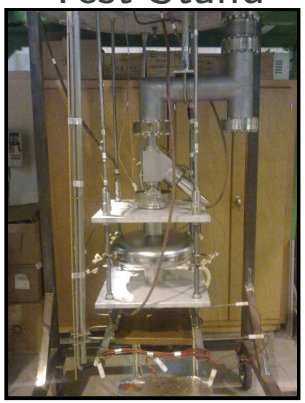

# Multipacting

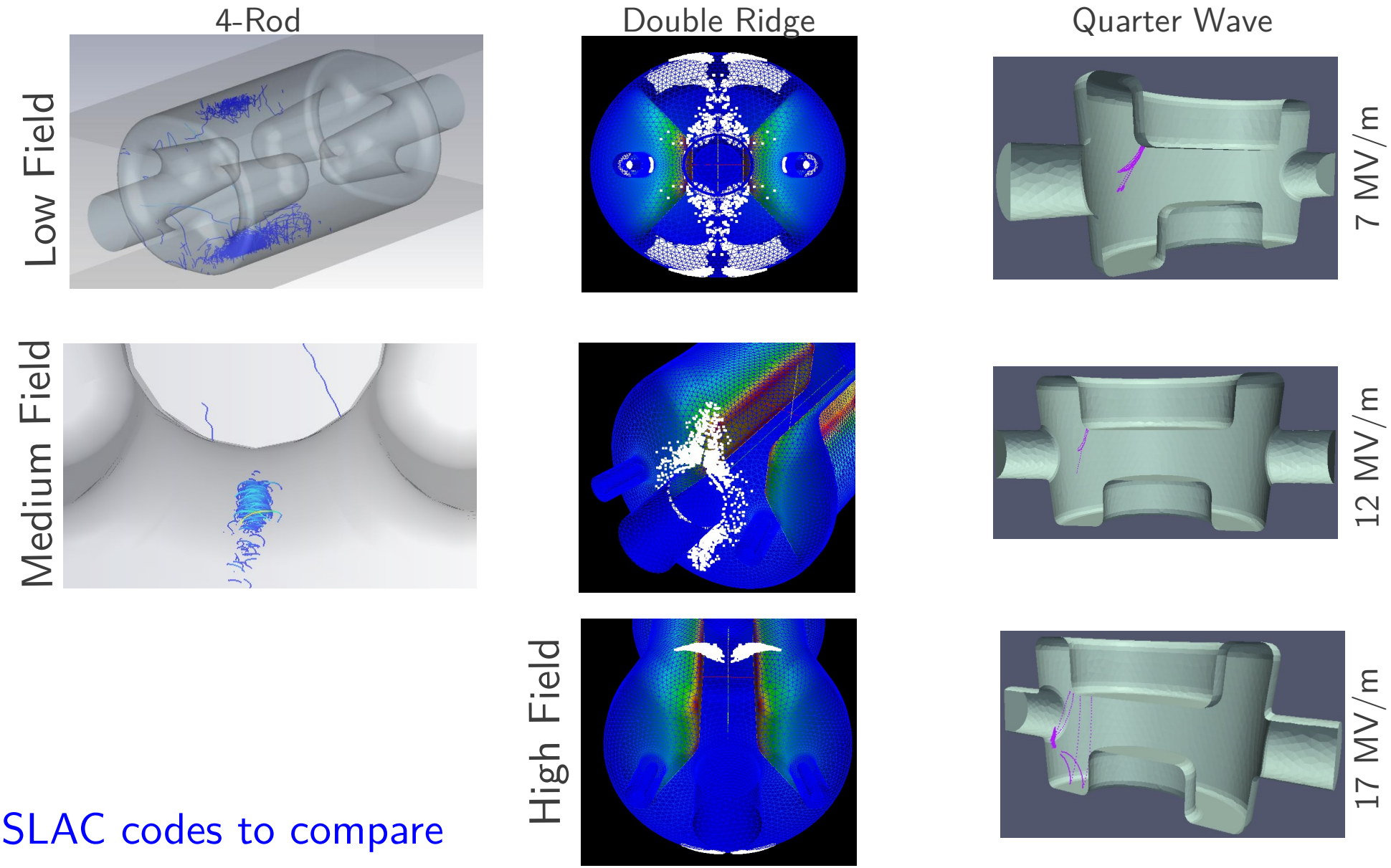


SLAC codes to compare three cavities (Z. Li)

Benchmark with measurements

# RF Multipoles

Courtesy: A. Grudiev et. al

Like IR magnets, higher order components of the deflecting field important

Long term simulations underway to determine tolerances

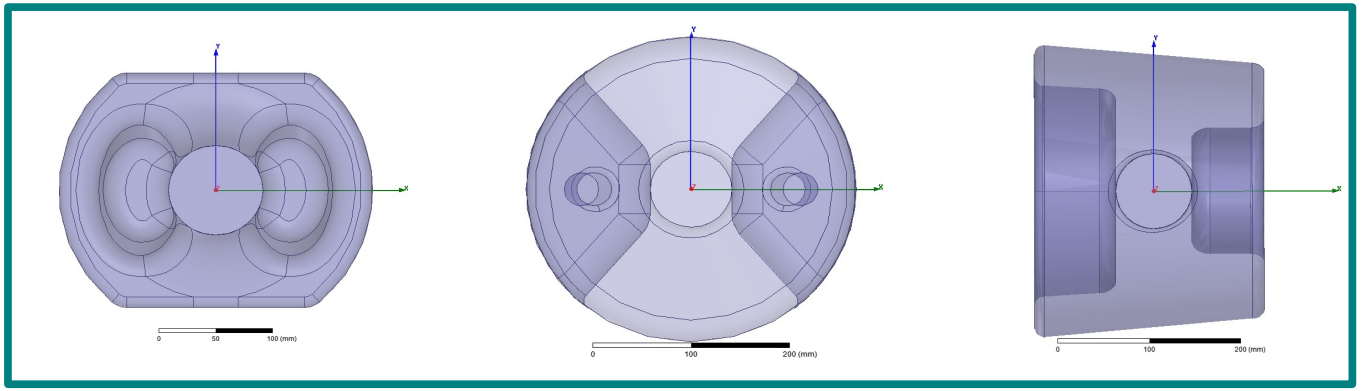

| $mTm/m^{n-1}$ | MBRC | 4-Rod | Pbar/DRidge | ¼-wave |
|---|---|---|---|---|
| $b_2$ | 55 | 0 | 0 | 114 |
| $b_3$ | 7510 | 900 | 3200 | 1260 |
| $b_4$ | 82700 | 0 | 0 | 1760 |
| $b_5$ | $2.9\times10^6$ | $-2.4\times10^6$ | $-0.5\times10^6$ | $-0.2\times10^6$ |
| $b_6$ | $52\times10^6$ | 0 | 0 | $-1.7\times10^6$ |
| $b_7$ | $560\times10^6$ | $-650\times10^6$ | $-14\times10^6$ | 0 |

→ $\Delta Q \sim 10^{-3}$

→ $\Delta\xi \sim 10^{-3}$

# Power Couplers

Power requirement ~60 kW (only ~18kW in operation)

- Peak power handling up to 250 kW
- Inner conductor to >20 mm (50 Ω)
- Air cooling with disc/cylindrical windows

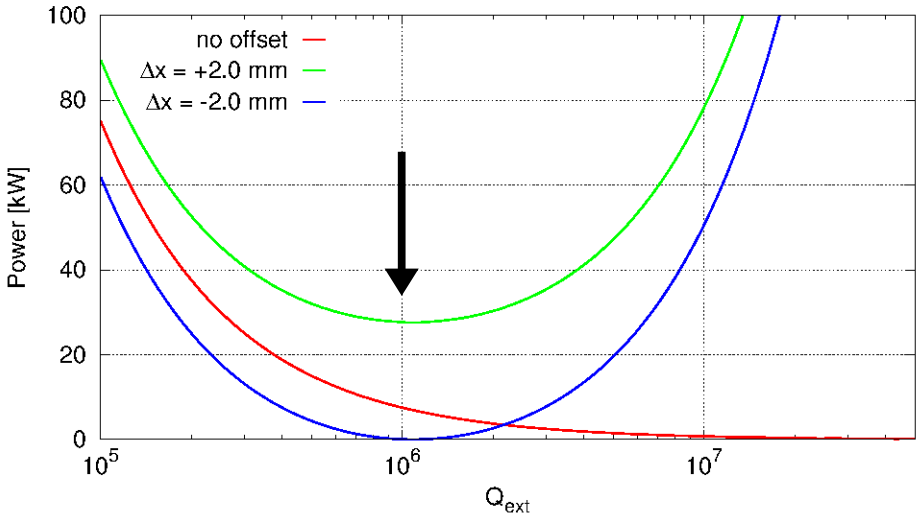


RF system development

- Waiting for final cavity interface from designers
- CERN (E. Montesinos) will develop power coupler + interfaces
  - Expect 2-3 year development+procurement time
- 50 kW tetrodes at 400 MHz already available for SM18 tests

**Tetrode** (SPS)
400 MHz, ~50kW

**IOTs** (TV Transmitter)
Light Sources

# HOM Damping

Approx: R/Q=200Ω → Qe<1x10$^3$

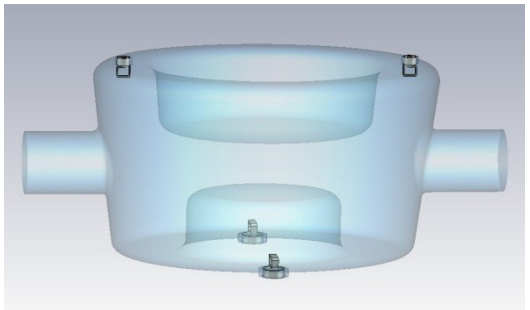

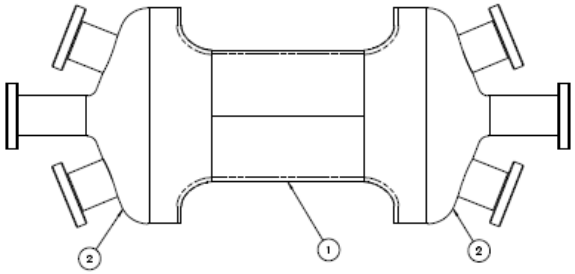


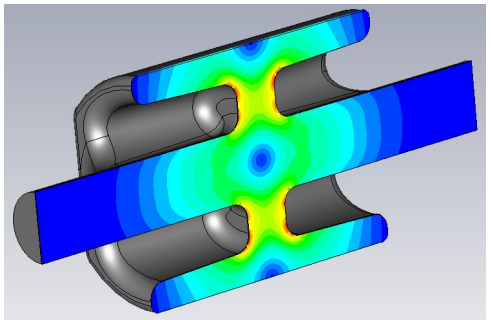

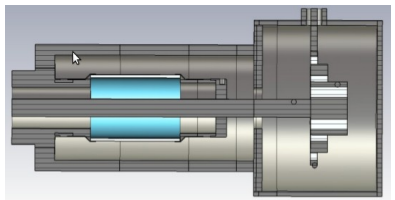

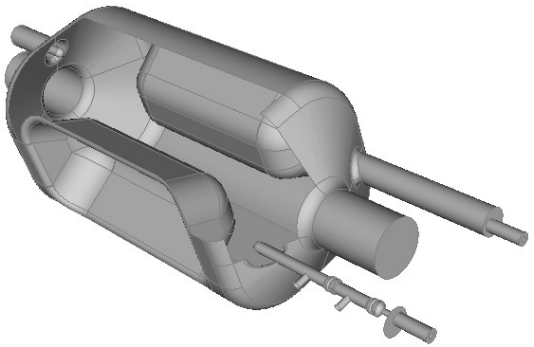

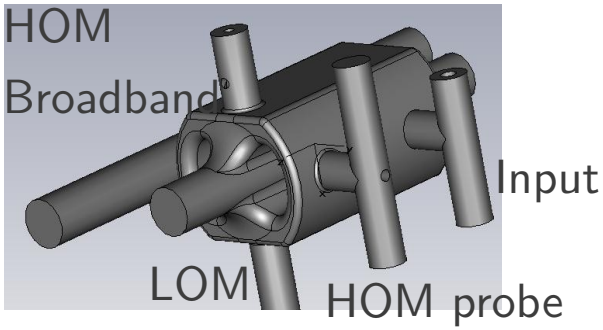


3-5 stage Chebyshev
High pass filter loops

4 Symmetric couplers
on the end caps
(2-stage high pass)

Symmetric HOM/LOM
couplers on cavity body

# Cavity Tuning

In operation ± 3kHz

Static: ~100 kHz

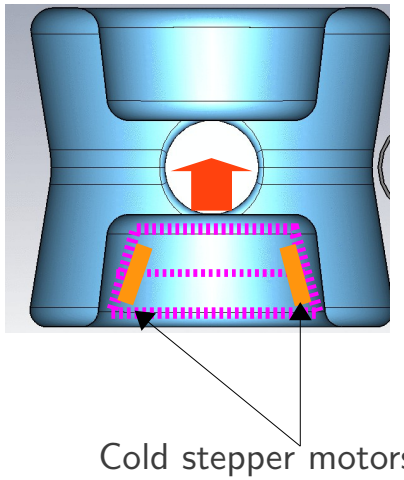


Push/pull
Blade like tuner

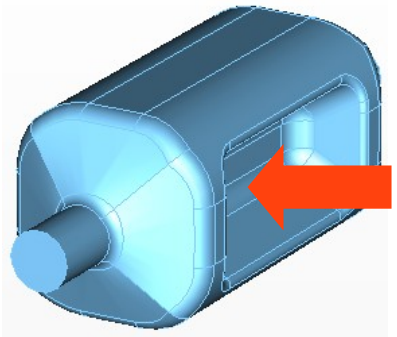

Push/pull on
cavity ridges

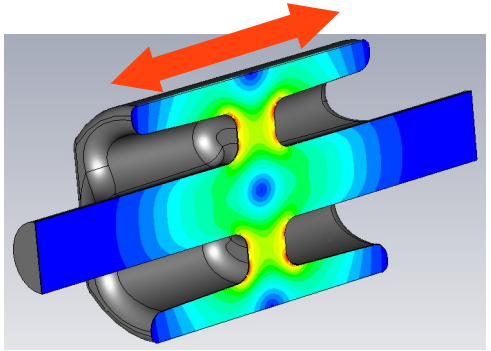

Scissor jack type
mechanism

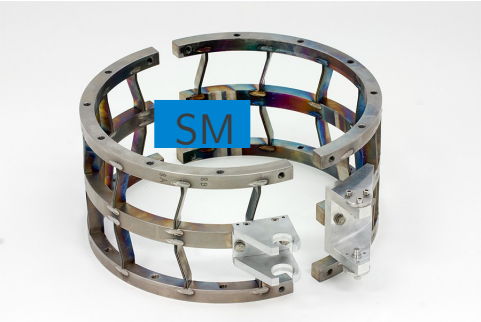


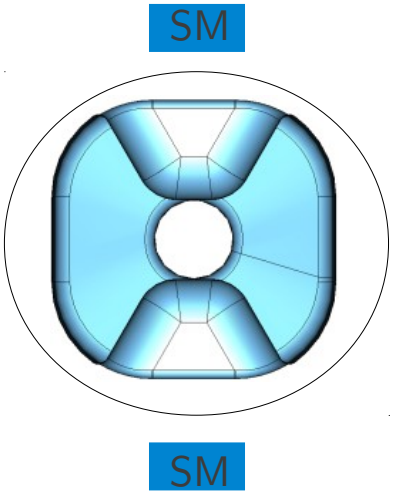


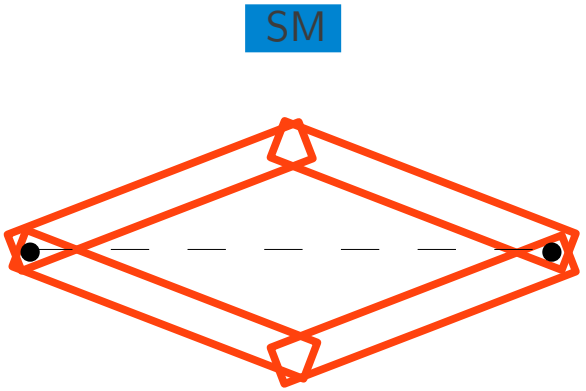


CEBAF Tuner

# He-Vessel & Tuner

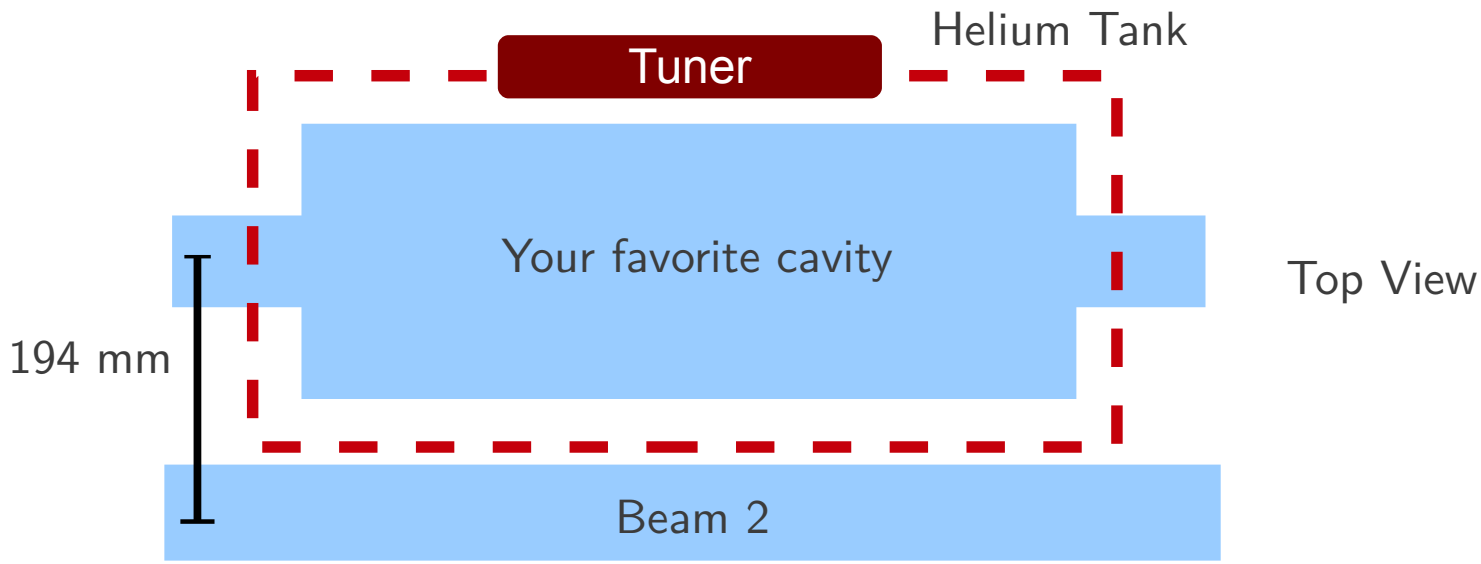


Preliminary thoughts

- Second beam-pipe inside or outside He-vessel ?
- Stainless steel, NbTi or Titanium vessel
- Pressure vessel code (some initial directives: <10L, ~1.5bar)
- Dynamic RF heat load ~5 watts maximum
- SPS tests/Point 4 in LHC → non-issue, Point 1/5 → 194mm

Most technical specifications to be defined in newly setup SPS working group

# From LHC-CC11

RF/beam tests ... before an LHC installation should be carried out in the SPS. Target for the SPS tests is 2015 and no later than 2016.

**Action**

A formal working group CCTC is formed, 1st meeting Jul 11, 2012.

**Mandate**

Identify/resolve constraints for testing crab cavities in the SPS. Develop full understanding of design requirements, drafting functional specifications, and set schedules and commissioning programs Input to the LHC crab cavity project through to a TDR.

**Members**

RF, Vacuum, Cryogenics, Integration, Collimation, Instrumentation, Beam dynamics, Machine Protection

# Cryomodule, BC

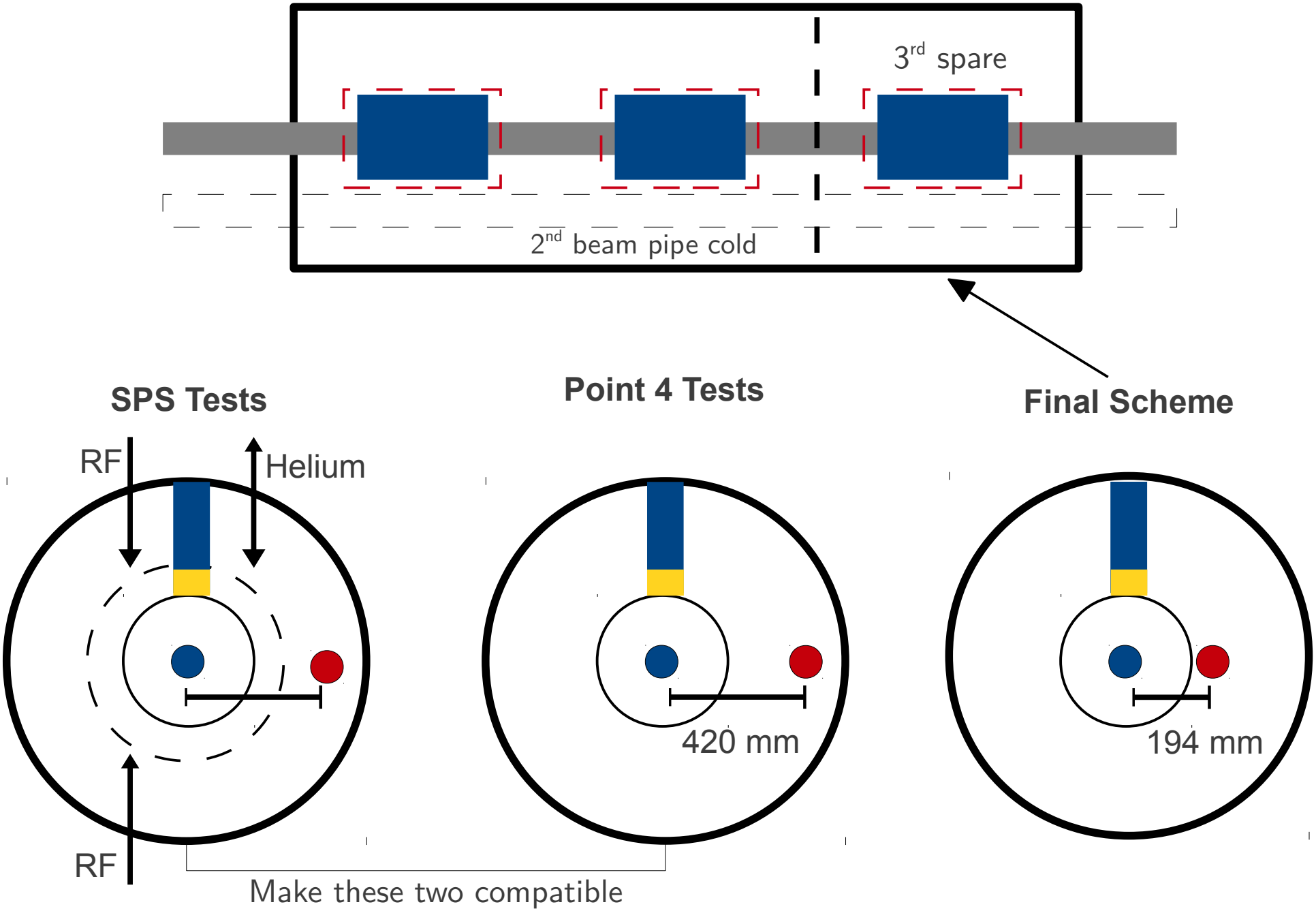

# Cryomodule Development

High priority to start joint effort with US and European partners

**Actions**

- Initial concepts in 6-8 months (FNAL, SBIR, Triumph, CEA-CNRS)
- Immediate task to identify constraints (environmental & RF)
- Engineering meeting at the end of 2012 for conceptual review

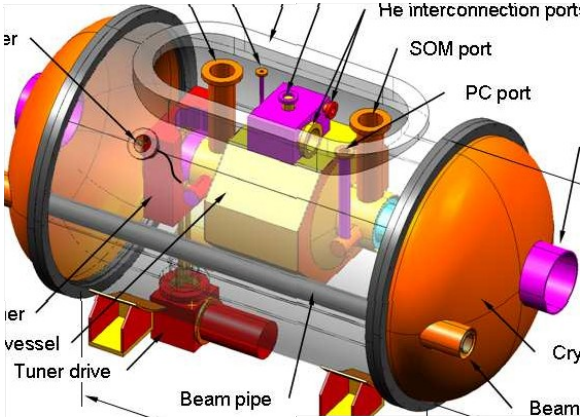


Some initial work done for elliptical cavities
FNAL (Y. Yakovlev et. al), 2010

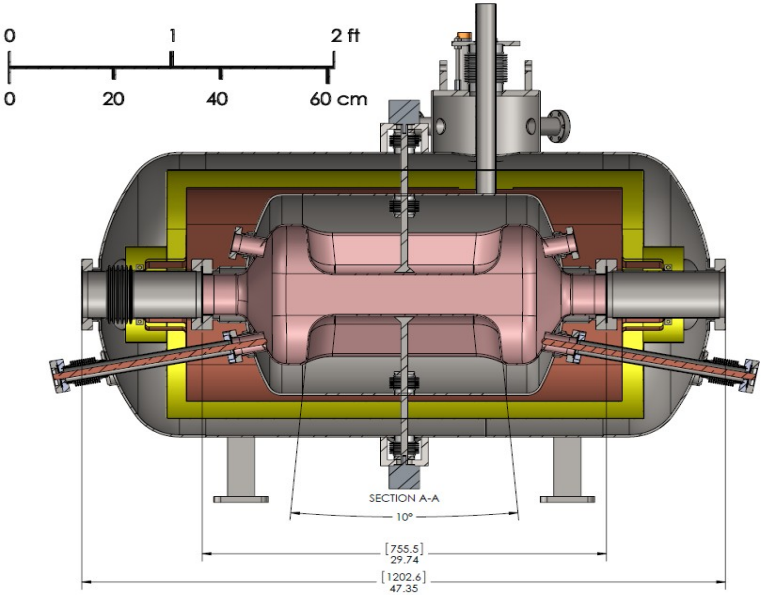


ODU-Niowave: SBIR, Phase I

# SPS, BA4 Setup (1998)

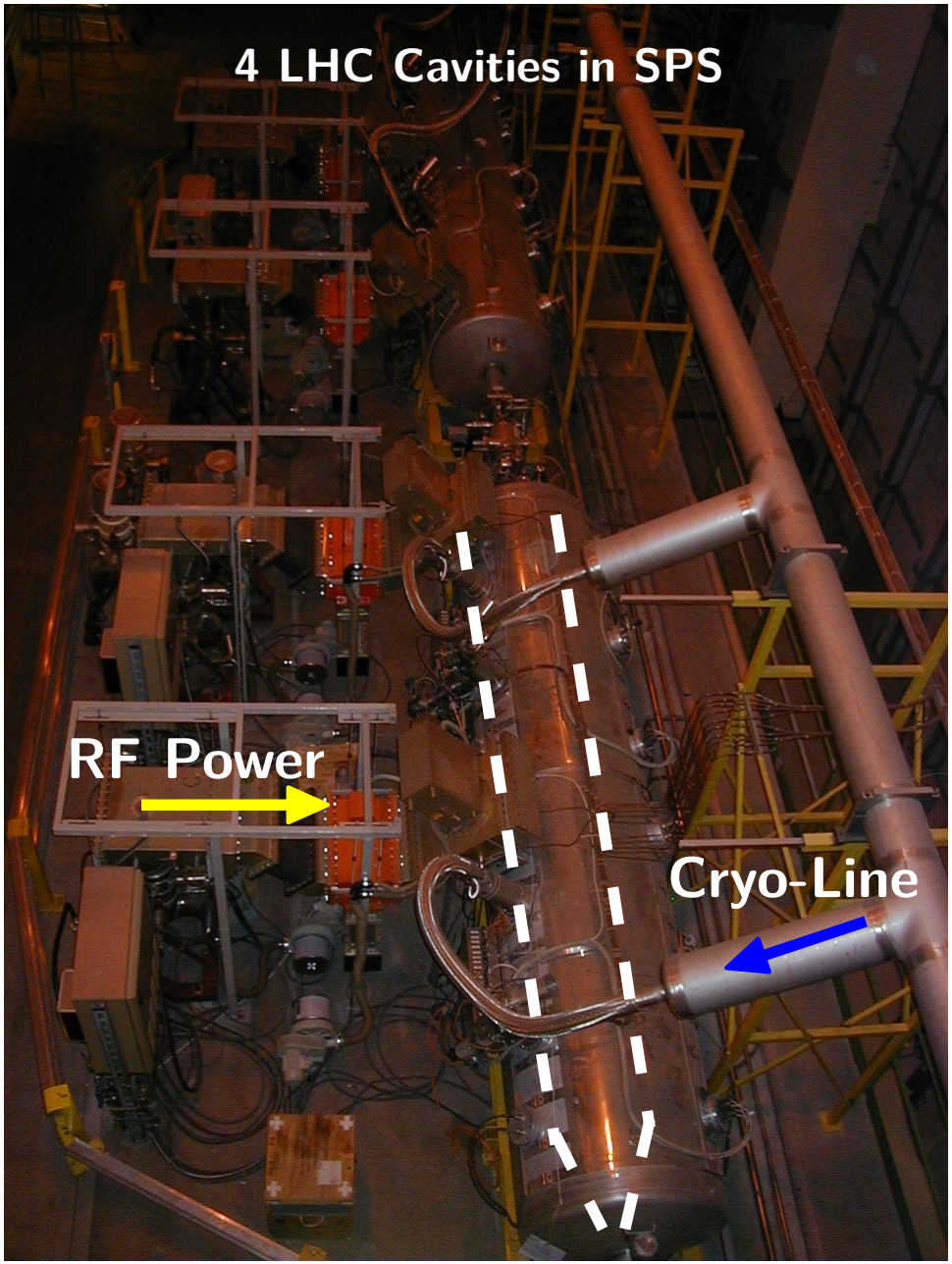


Y-Chamber like, similar to present COLDEX

Crab cavity test setup in SPS will look similar

50 kW Tetrode

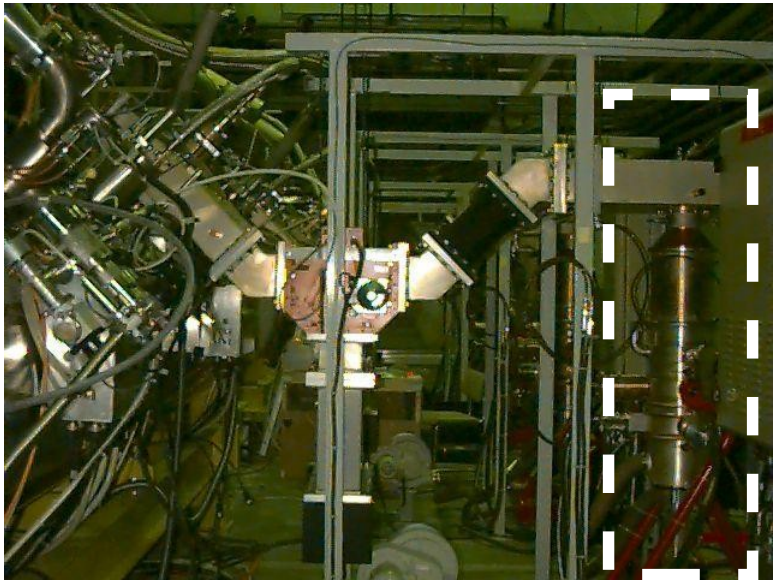

Courtesy E. Montesinos

# LSS4, COLDEX

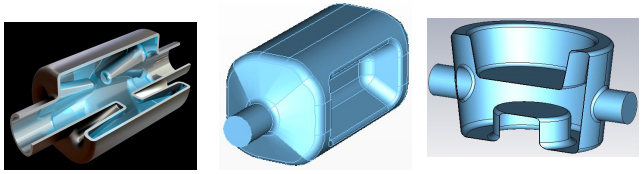

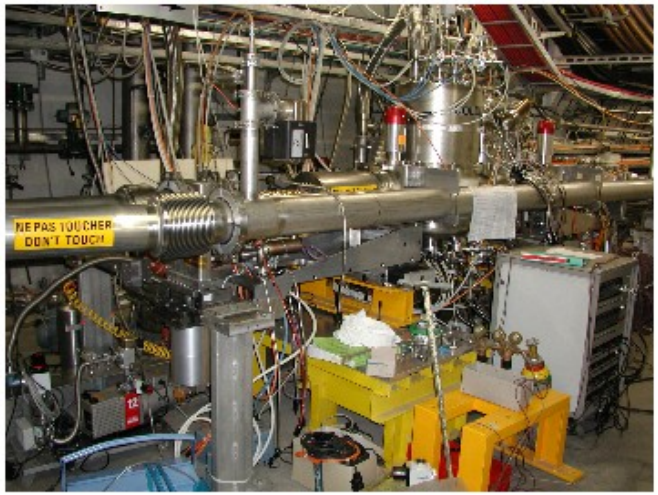


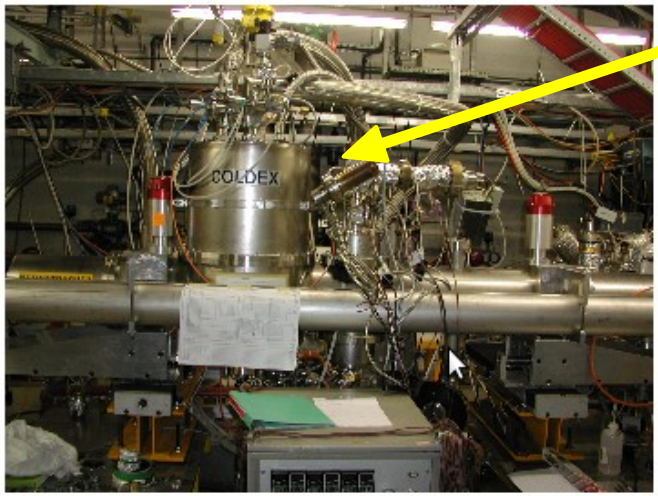


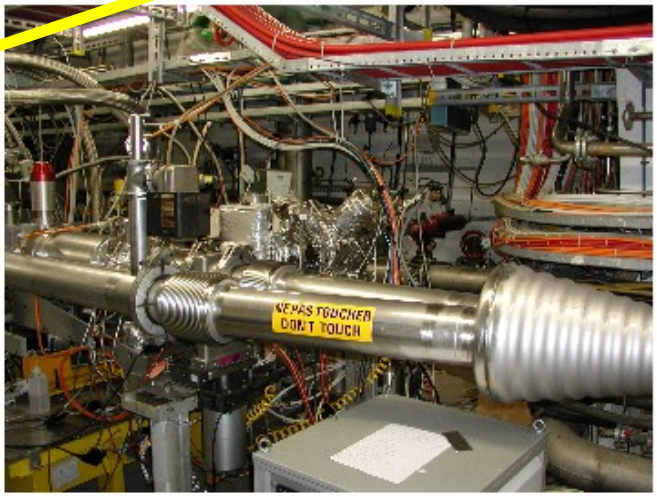


Milestone 3: SPS Tests foreseen 2016

Cavity validation with beam (field, ramping, RF controls, impedance)

Collimation, machine protection, cavity transparency, RF noise, emittance growth, non-linearities,

Cryogenics, RF power, cabling and installation services (some during LS1)

# Temp Choice → 2K Baseline

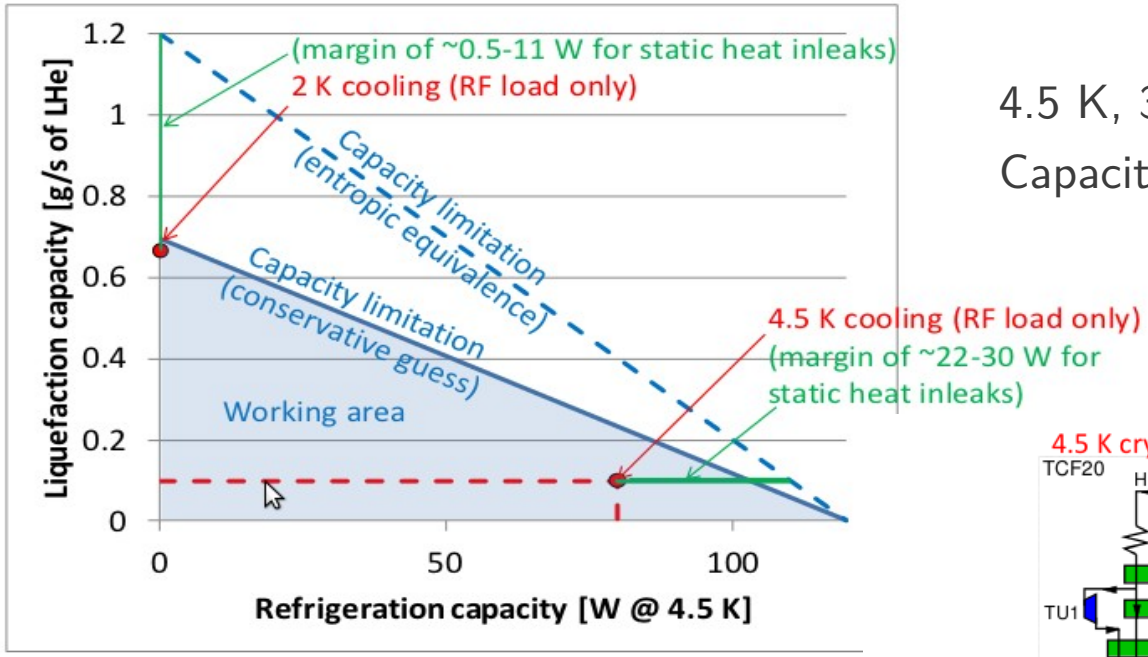


4.5 K, 300 kCHF

Capacity: 0.1 g/s, measured capacity 120 W.

2 K, add 150 kCHF

(Heat exchanger + JT valve + ..)

Capacity: 0.7 g/s

Measured capacity by the end of 2012

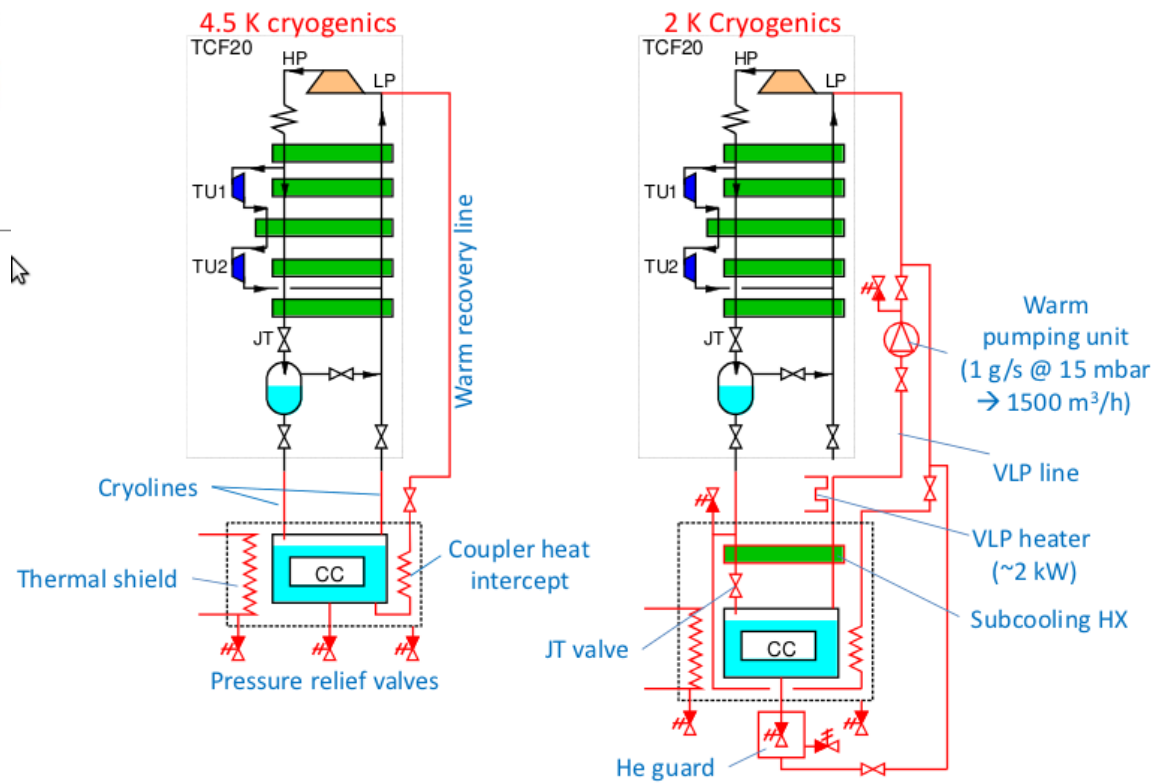

# LARP Crab Request

| **FTE/Hardware** | FY12 | FY13 | FY14 | FY15 | Total [k$] |
|---|---|---|---|---|---|
| BNL | 0.048/0.349 | 0.144/0.508 | 0.144/0.4 | 0.4 | 0.336/1.657 |
| FNAL | 0.155 | 0.565 | 0.5/0.25 | 0.5/0.25 | 1.565/0.5 |
| (ODU) | 0.245/0.1 | 0.245/0.4 | 0.245/0.4 | 0.4 | 0.735/1.3 |
| LBNL | 0.096 | 0.096 | 0.051 | 0.051 | 0.294 |
| SLAC | 0.15 | 0.15 | 0.15 | 0.15 | 0.6 |
| **Total [M$/yr]** | **1.143** | **2.108** | **2.140** | **1.751** | **6.987** |

Outcome $\rightarrow$ 4 cavities (all dressed) + 1 cryostat

(outside contributions: FPCs + 1 cryostat)

**Details on FTE/yr**

BNL : 1.0 Postdoc (B. Ping) + 0.2 FTE (Q. Wu) + In kind (Ilan+Sergey)

FNAL: 1.0 Student (Bruce Yee) + 1.5 FTE (cryostat) + 500k for cryostat

ODU: 1.0 postdic (Julius Nfor) + 1 Student (S. DeSilva) + In kind (Jean)

LBNL : 0.25 postdoc (Stefan Paret) + 0.15 FTE (ji Qiang) + travel

SLAC: 0.5 FTE (Zenghai)

# Estimate/Breakdown

| | Cavity Testing | | Cryomodule | | SM18 / SPS Tests | [MCHF] |
|---|---|---|---|---|---|---|
| **Global** | FY12 | FY13 | FY14 | FY15 | FY16 | FY17-21 |
| FTEs [yrs] | 13 | 16.25 | 20.3 | 9 | 7.3 | 75.5 |
| Mat [MCHF] | 3.6 | 575 | 7.1 | 3.55 | 3.7 | 66.1 |

| **Breakdown: Material in MCHF & [FTE]** | | | | | | |
|---|---|---|---|---|---|---|
| CERN-RF* | 0.713 [1.0] | 2.00 [2.5] | 4.00 [2.5] | 2.00 [4.8] | 3.0 [5.0] | |
| USLARP | 0.043 [2.3] | 0.87 [4.0] | 0.92 [3.6] | 1.00 [2.3] | [tbd] | |
| UK-LU/DL | 0.200 [2.4] | 1.05 [1.5] | 1.05 [1.5] | 1.05 [1.5] | [tbd] | |
| CEA-CNRS | [0.5] | [2.0] | [1.0] | - | - | |

* Note: Some CERN spending not included in distribution
(Infrastructure, cryogenics and services)

# Next Steps

Cavities, end of 2012

- Two prototypes at hand and 3$^{rd}$ to come soon
- Cavity testing is the immediate focus $\rightarrow$ 1$^{st}$ milestone (end of year)

Cryomodule, end of 2014

- High priority to establish a joint effort NOW
- Collaborations: N.A. (FNAL, Triumph) & Euorpe (CEA-CNRS/IN2P3)
- Focused meeting at the end of year to review conceptual designs

SPS Tests, end of 2015

- CERN working group for complete integration (1$^{st}$ meeting Jul 11)
- Preparation (cabling, RF etc..) in SPS already starting in LS1

# Some More Parameters

Pressure sensitivity & pressure vessel code

- Cavity stiffness $<$ 20-30 kN/mm (tunability)
- Sensitivity $\sim$ 100 kHz/mm (coarse), Resolution $\sim$ 0.1 kHz
- Should we conform to higher category for safety

Mechanical alignment tolerances

- Longitudinal alignment at the level of β-beta (voltage compensation)
- Transverse alignment $<$ 100 microns (power compensation)
- Tilt alignment (residual x-angle in the other plane, few μrad)

# LHC RF Distribution

P. Baudrenghien
(Primarily a CERN activity)

Independent high power RF (60 kW → IOTs)

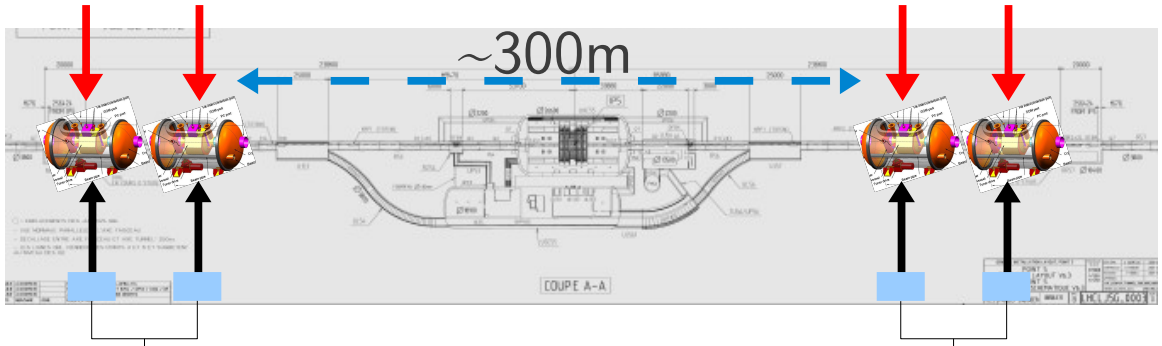


Crab cavity servo controller

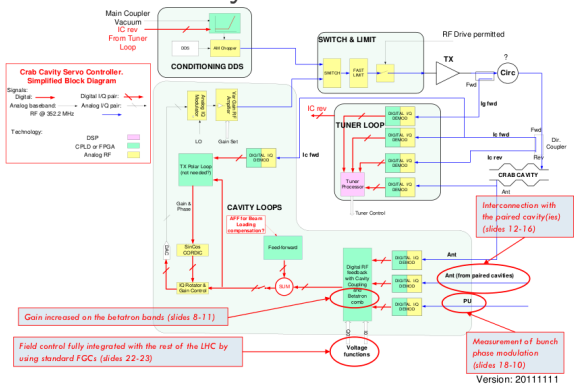


LLRF (Strongly coupled feedback)

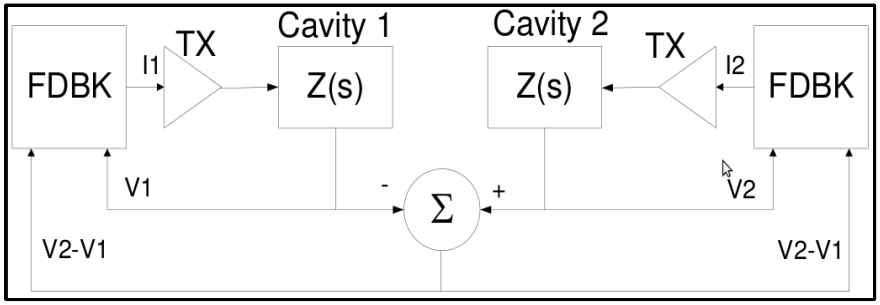


Track cavity 2 drop in voltage

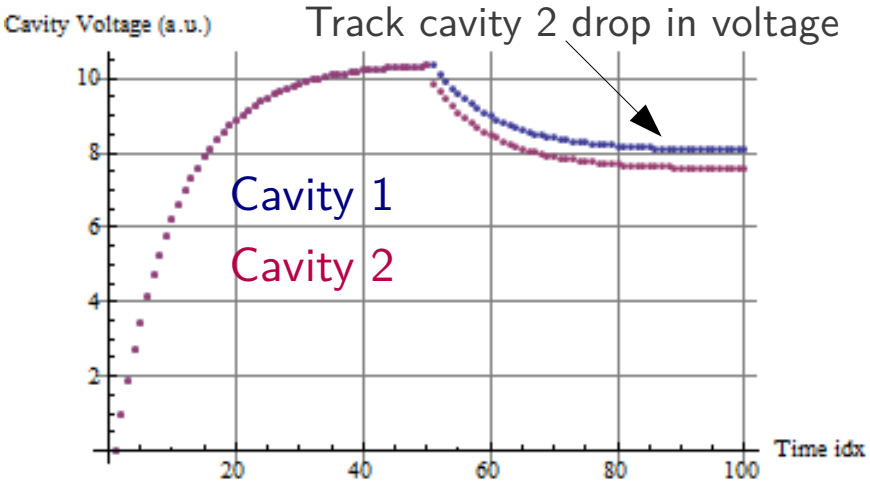

# Cavity Sensitivity

~ 1mm displacement for 4mm thickness

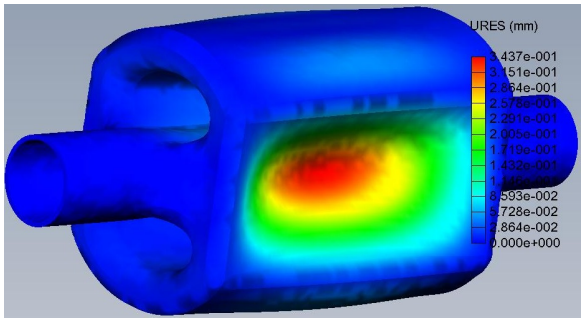


~ 0.1mm displacement for 4mm thickness

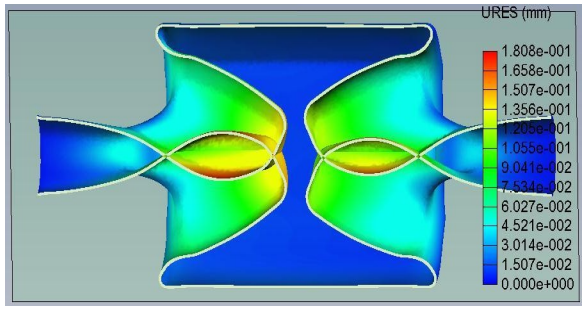


Vibrational modes are 450 Hz and above but detailed simulations underway

The ridges area needs to be constrained against pressure fluctuations ~ MHz/mm

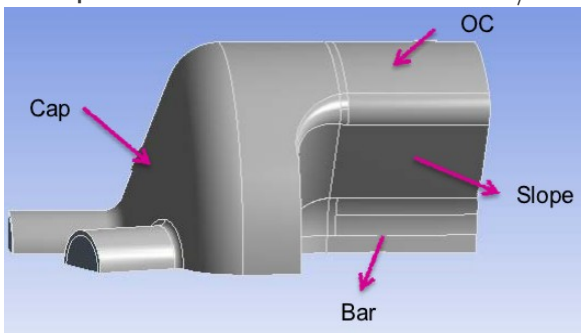


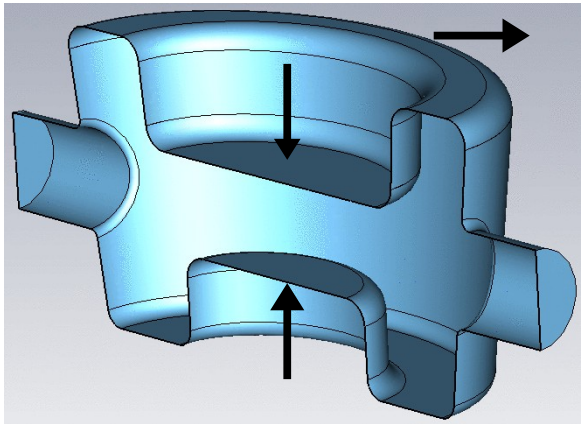

Vibration of flat surfaces and/or change in ellipticity ~MHz/mm (constrain with stiffners)

Operation is CW like, voltage is only slowly ramped up (hours)

Lorentz force detuning $\rightarrow$ probably non-issue

Microphonics $\rightarrow$ Stiffners, should we consider fast tuning?

# Impedance Thresholds

## Longitudinal

Courtesy: Burov, Shaposhnikova

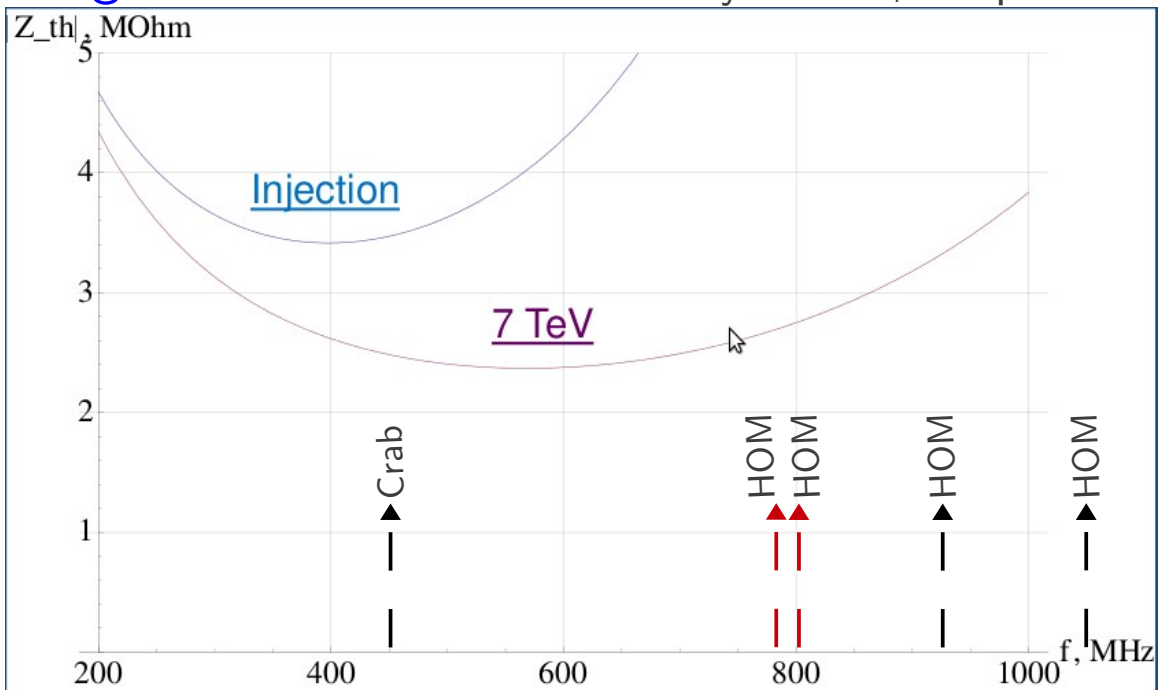


Longitudinal impedance
2.4 MΩ total (7 TeV)

Strongest monopole mode:
R/Q=200Ω → Qe<1x10$^3$
Damping → Qe < 100-500

## Transverse

| Energy $\gamma m_p c^2$ | Beta-function $\beta_{x,y}$ | Impedance $-\mathrm{Re}\,Z_{th}$ |
|---|---|---|
| 450 GeV | 150 m | 2.7 MOhm/m |
| 7 TeV | 4 km | 1.5 Mohm/m |

Strongest dipole mode:
Z < 0.6 MΩ/m (0.58 GHz)
(Qext = 500)

# Module Layout, Point 1/5

Case I might be preferable to equalize voltages for the two beams

Machine protection → minimize cavity quench propagation
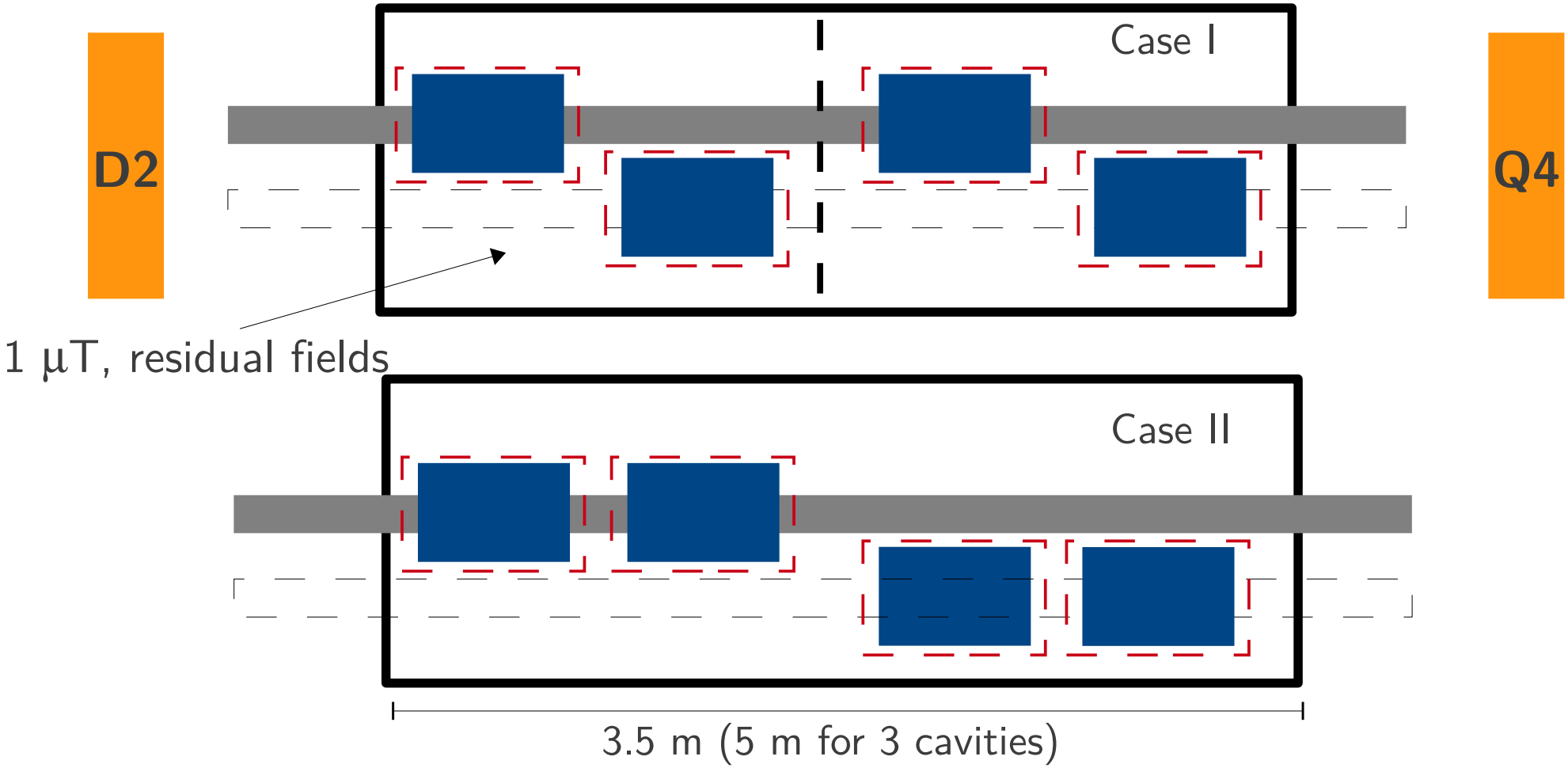
Spare policy → nominally 8-modules for 2-IPs total + 2 spares