SAND – ECAL Working Group

Antonio Di Domenico
Dipartimento di Fisica, Sapienza Università di Roma
and INFN-Roma, Italy

Danilo Domenici
INFN-LNF, Frascati, Italy

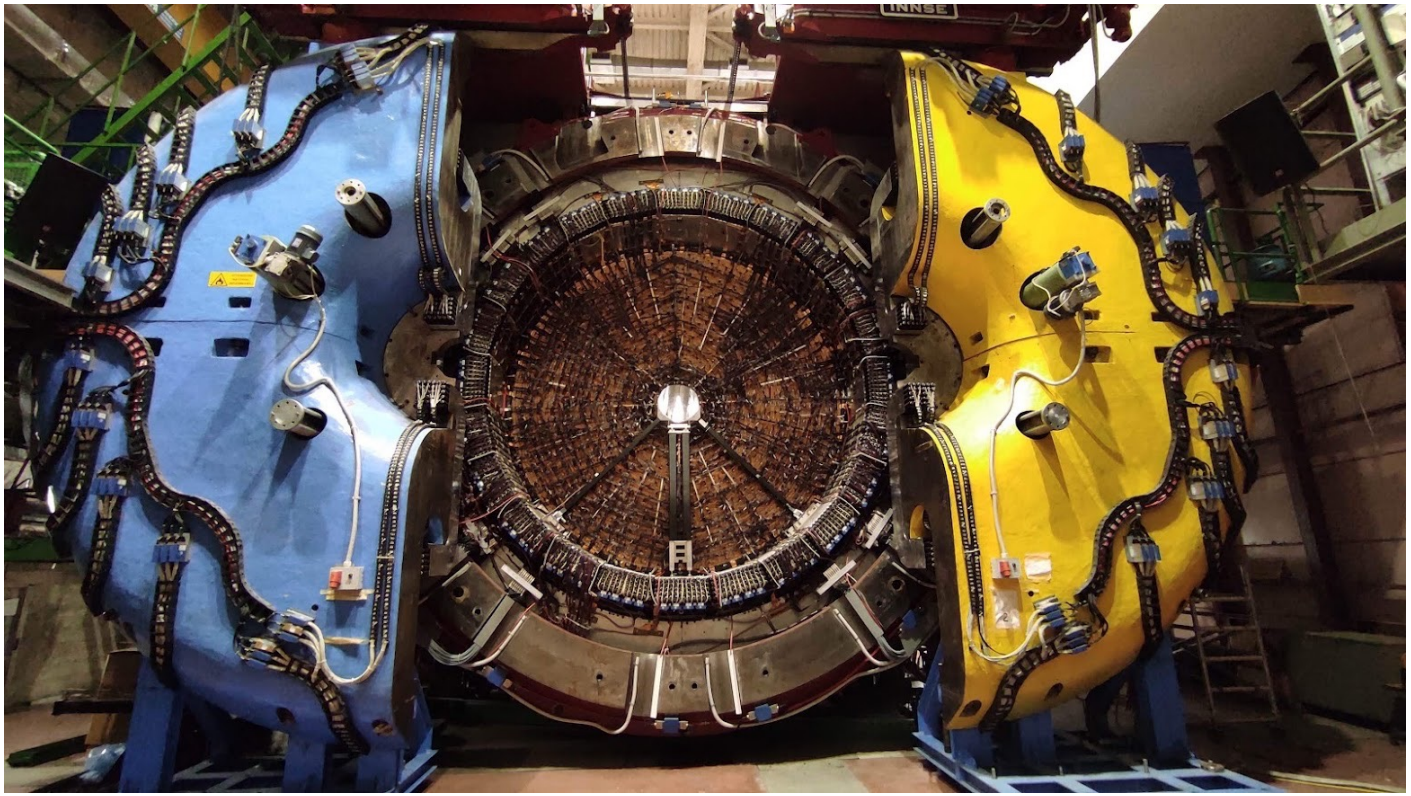

4 July 2022

ECAL operations in progress

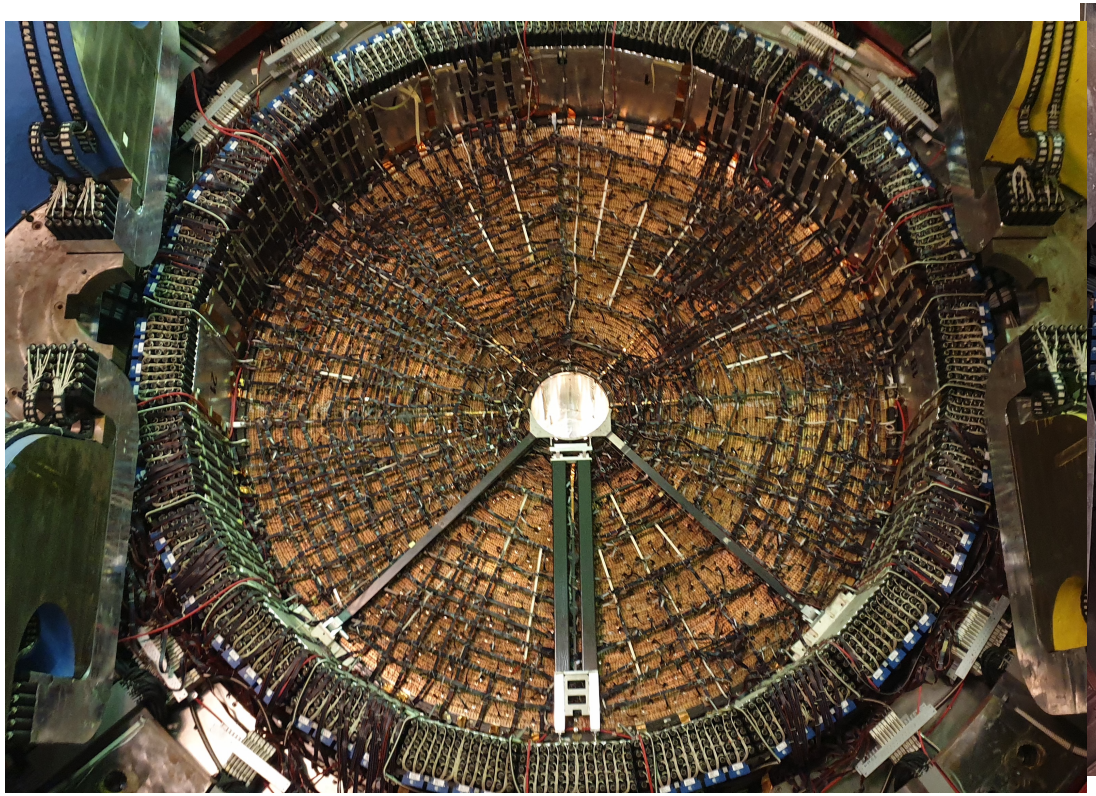

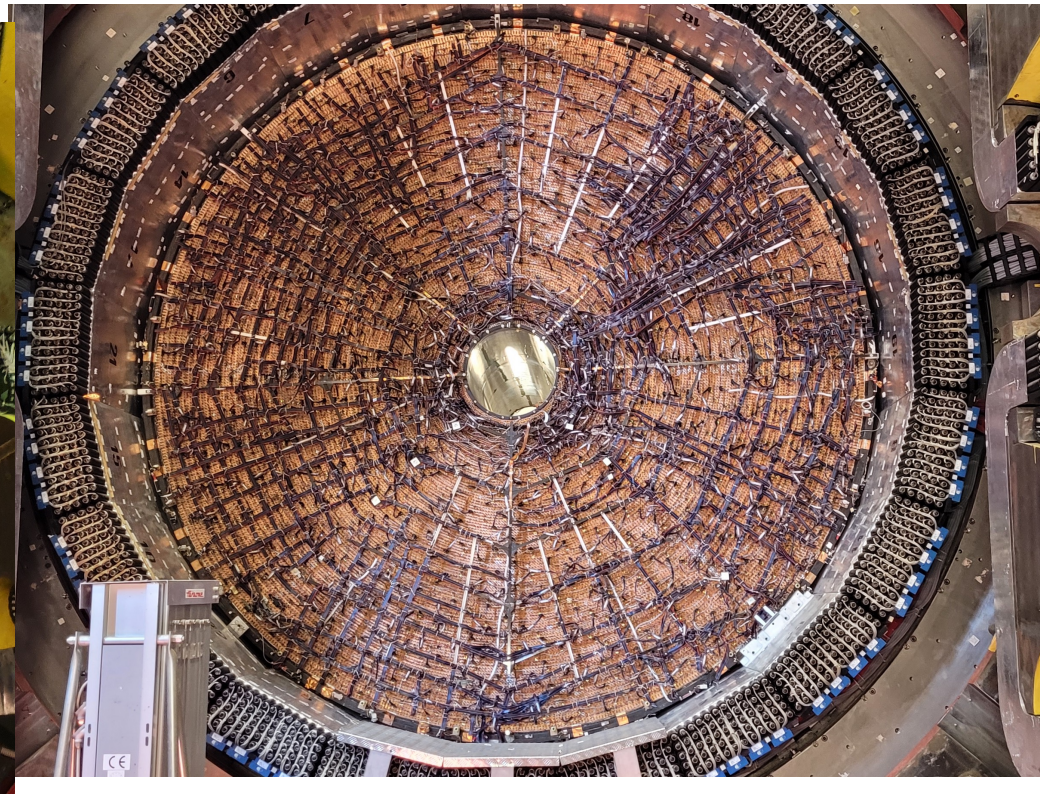

ECAL operations in progress

ECAL operations in p

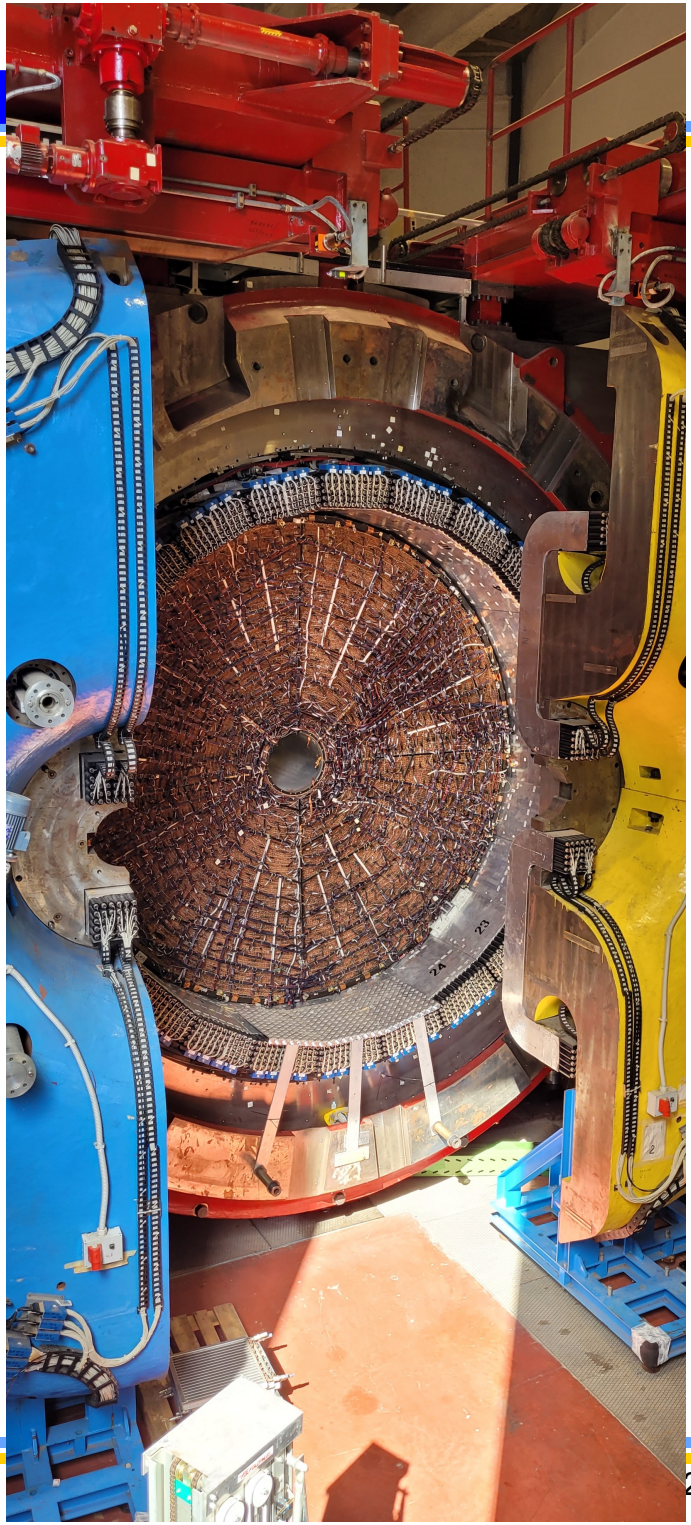

ECAL operations in progress

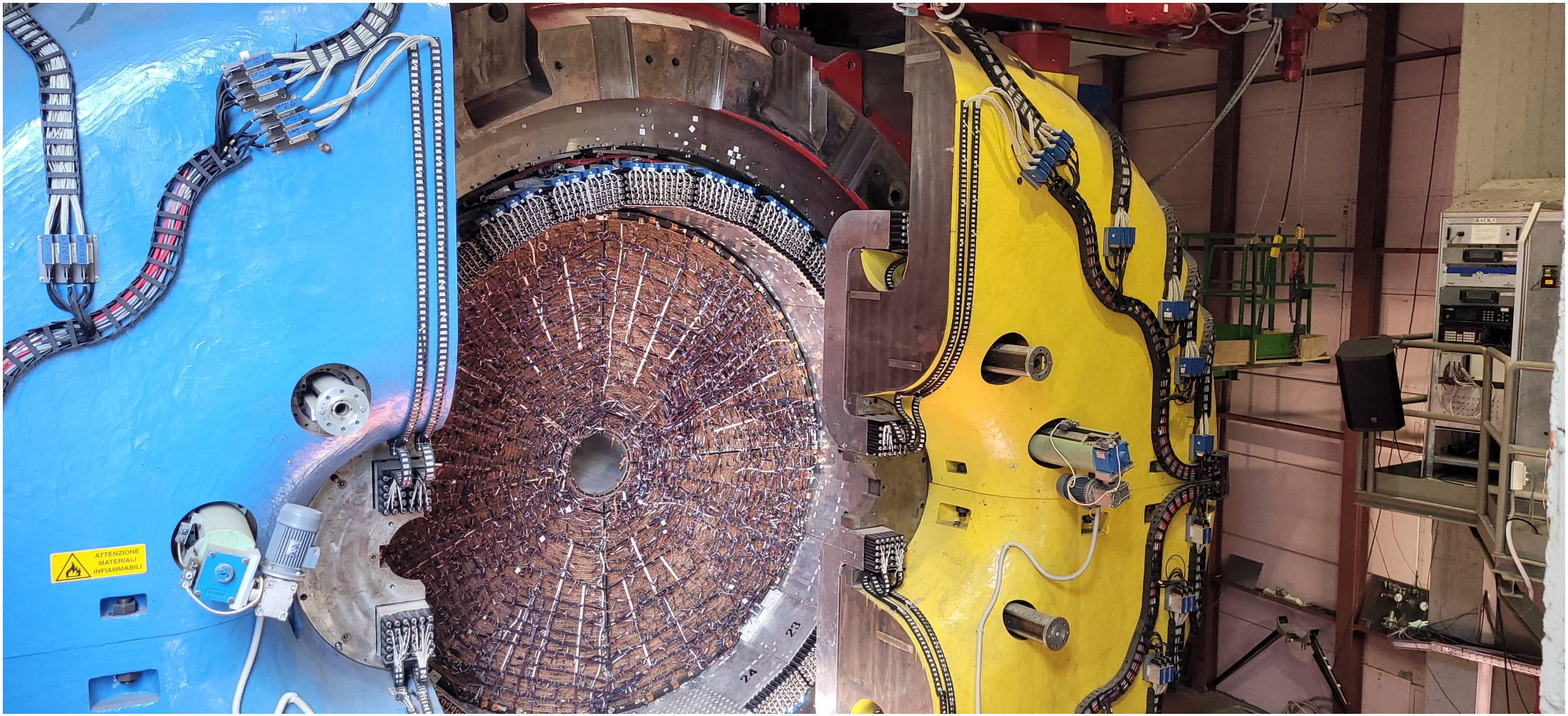

ECAL operations in progress

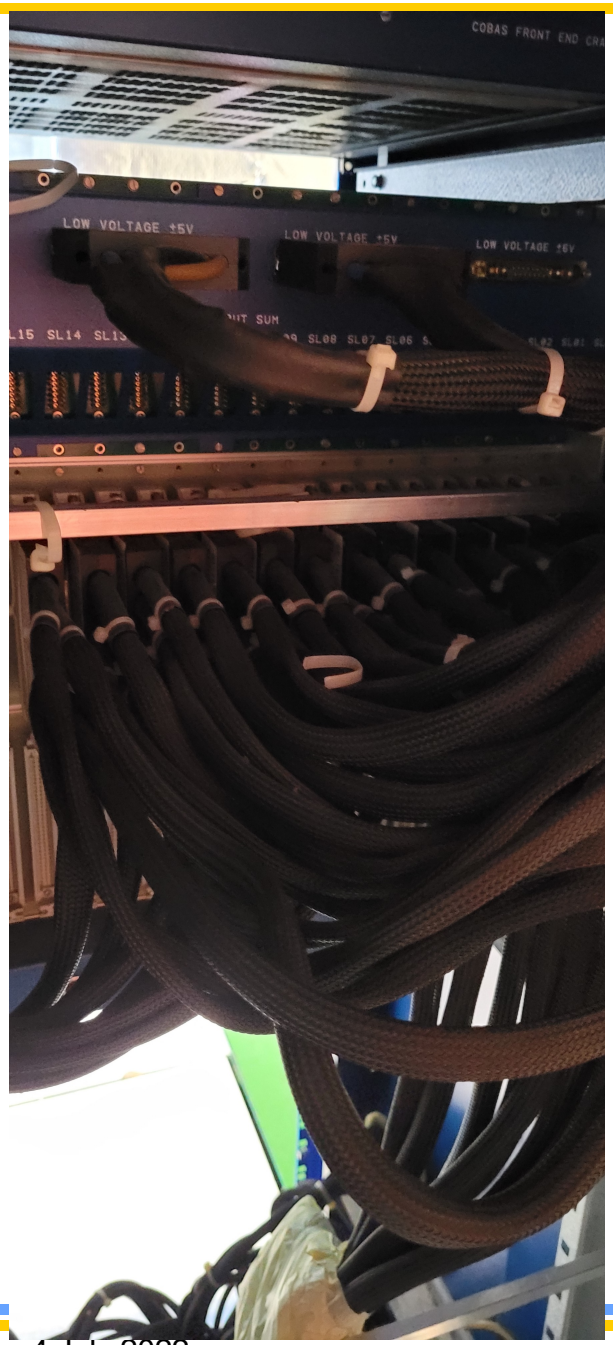

ECAL operations in progress

ECAL operations in

ECAL operations in progress

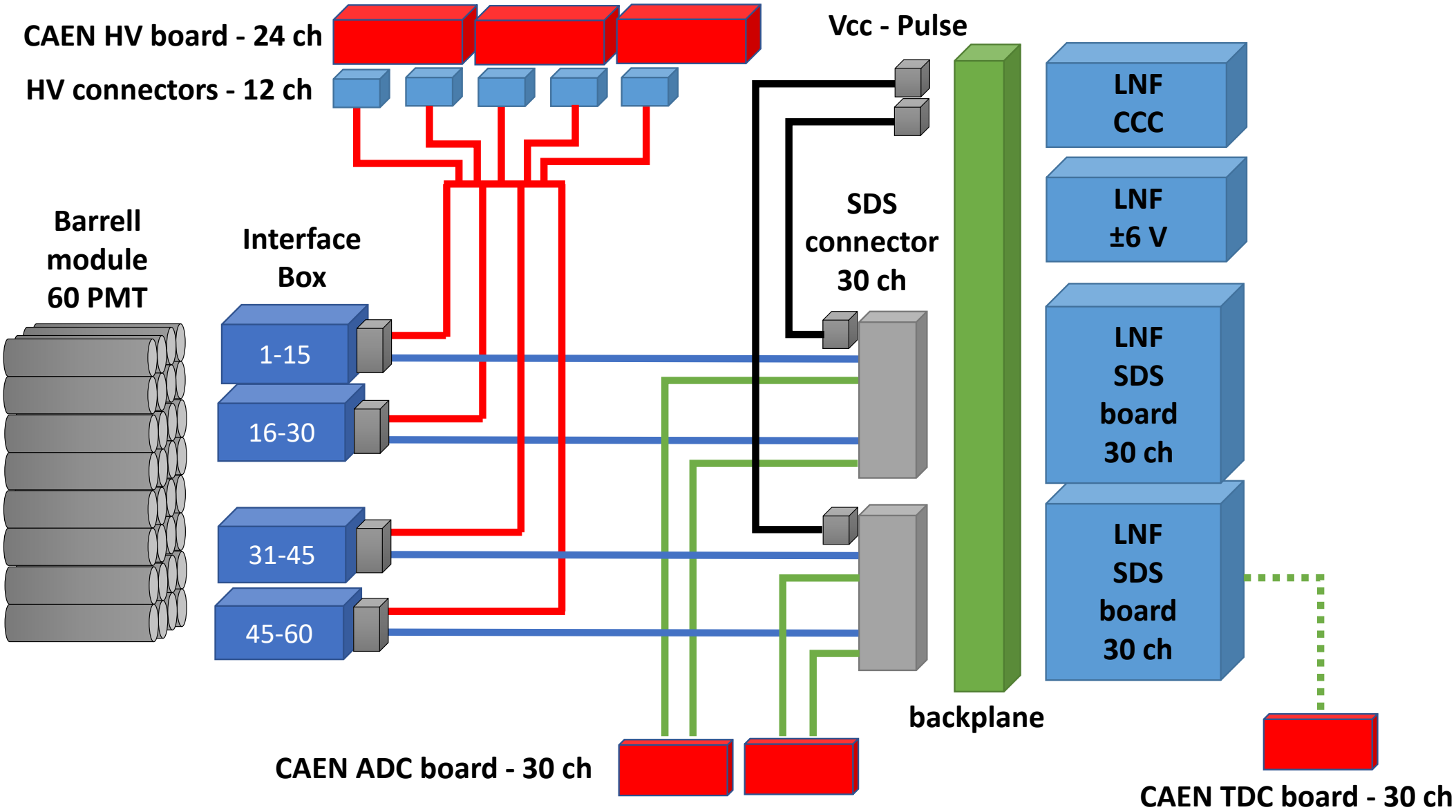
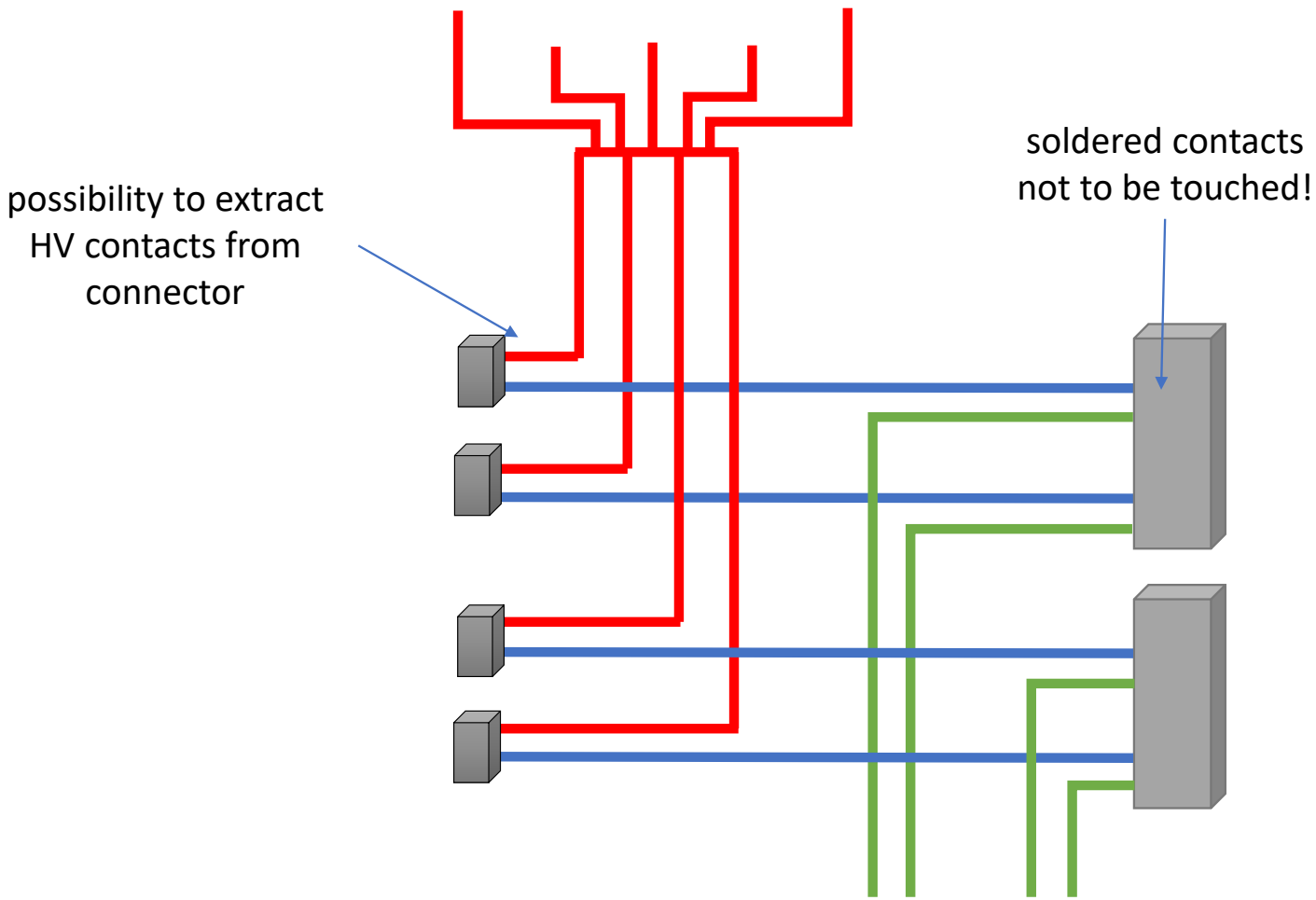
ECAL operations in progress