COUPP Status

SNOLAB EAC Review

Toronto, 3/1/12

Andrew Sonnenschein

Fermilab

Where We Were:
Status as of Last EAC Meeting 8/18/2011

- Data from first COUPP-4 run at SNOLAB was shown, but no sensitivity plot.
- Preliminary information on known backgrounds : radioactivity neutrons from detector components.
- COUPP-60 installation issues:
  - Photosensitivity of CF3I
  - Excess surface boiling
  - CF3I inhalation hazard
  - Funding delays.

- Schedule called for installation of COUPP-60 at SNOLAB by 4/1/12…

COUPP2L SNOLAB Results

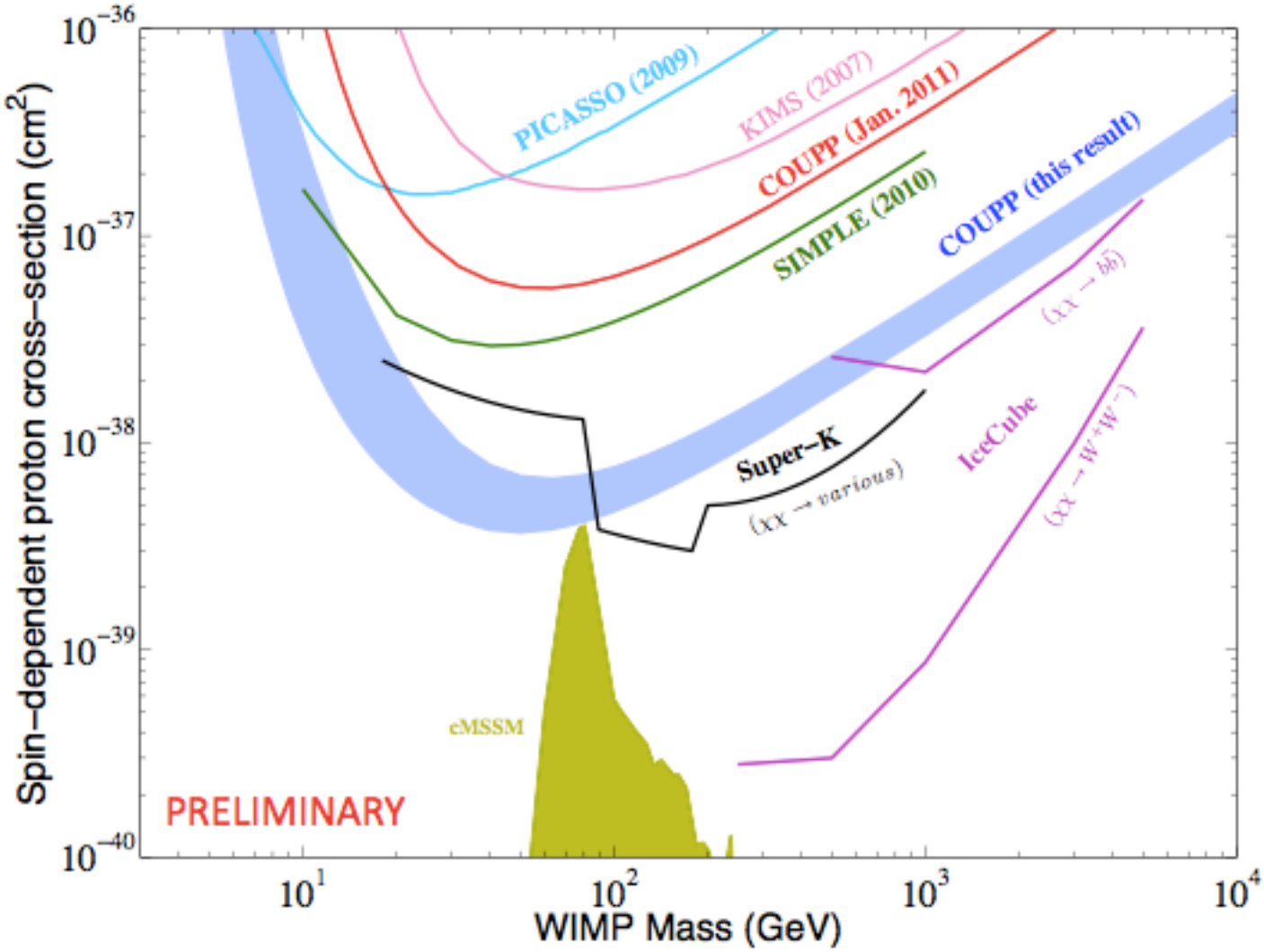

https://hepconf.physics.ucla.edu/dm12/talks/hall.pdf

COUPP-4 Result Summary

- 20 single bubble events observed in 553 kg-days after acoustic alpha rejection cut.
- World's best spin-dependent sensitivity for M_{WIMP}> 20 GeV.
- Observed multiple bubble events (3) indicate neutrons.
  - Expected 5 singles and 2 multiples from known neutron sources.
  - Why do we see an excess of single bubbles compared to background model?
    - Poor understanding of neutrons?
    - Inefficiency of acoustic alpha rejection cut?
    - WIMPs?
    - Something else? We see interesting, unexplained time correlations between singles.
- Sensitivity is compromised by poor calibration of detector response.
  - Limits are shown for a spectrum of possible models of bubble formation efficiency vs. nuclear recoil energy (blue uncertainty band in limit plot)

Background Estimates:

Radiopurity measurements + Monte Carlo

Material	Source	Concentration	Rate in DM-34°C	Rate in DM-37°C	Rate in DM-40°C
			(10^{-3} cts/kg$_{CF_3I}$/day)		
Glass (viewports)	^{238}U (α,n)	0.513±0.055 ppm	$3.87^{+0.42}_{-0.42}$	$4.20^{+0.45}_{-0.45}$	$4.46^{+0.47}_{-0.47}$
PZT (piezos)	^{238}U s.f.	3.95±0.43 ppm	$1.64^{+0.18}_{-0.18}$	$1.79^{+0.19}_{-0.19}$	$1.90^{+0.20}_{-0.20}$
Glass (viewports)	^{232}Th (α,n)	0.528±0.058 ppm	$1.30^{+0.14}_{-0.14}$	$1.41^{+0.15}_{-0.15}$	$1.50^{+0.16}_{-0.16}$
			(10^{-4} cts/kg$_{CF_3I}$/day)		
PZT (piezos)	^{238}U (α,n)	3.95±0.43 ppm	$6.04^{+0.66}_{-0.66}$	$6.66^{+0.71}_{-0.71}$	$7.14^{+0.75}_{-0.75}$
Glass (viewports)	^{238}U s.f.	0.513±0.055 ppm	$4.87^{+0.52}_{-0.53}$	$5.29^{+0.56}_{-0.56}$	$5.63^{+0.59}_{-0.60}$
Norite (rock walls)	^{238}U/^{232}Th	1.2/3.3 ppt	$1.26^{+0.71}_{-0.57}$	$1.26^{+0.71}_{-0.57}$	$1.26^{+0.71}_{-0.57}$
Steel (pressure vessel)	^{238}U s.f.	~1 ppb	$0.92^{+0.10}_{-0.10}$	$1.00^{+0.11}_{-0.11}$	$1.07^{+0.11}_{-0.11}$
			(10^{-5} cts/kg$_{CF_3I}$/day)		
PZT (piezos)	^{232}Th (α,n)	1.18±0.15 ppm	$6.33^{+0.69}_{-0.69}$	$6.98^{+0.75}_{-0.74}$	$7.51^{+0.80}_{-0.80}$
J-B Weld (epoxy)	^{238}U s.f.	0.173±0.019 ppm	$5.83^{+0.63}_{-0.63}$	$6.34^{+0.67}_{-0.68}$	$6.74^{+0.72}_{-0.71}$
PCB (preamps)	^{232}Th (α,n)	2.01±0.22 ppm	$4.89^{+0.53}_{-0.53}$	$5.32^{+0.56}_{-0.57}$	$5.63^{+0.60}_{-0.60}$
PCB (preamps)	^{238}U s.f.	0.491±0.056 ppm	$4.41^{+0.48}_{-0.48}$	$4.80^{+0.51}_{-0.51}$	$5.11^{+0.54}_{-0.54}$
PCB (preamps)	^{238}U (α,n)	0.491±0.056 ppm	$3.36^{+0.36}_{-0.36}$	$3.63^{+0.39}_{-0.39}$	$3.87^{+0.41}_{-0.41}$
J-B Weld (epoxy)	^{238}U (α,n)	0.173±0.019 ppm	$2.11^{+0.23}_{-0.23}$	$2.26^{+0.24}_{-0.24}$	$2.38^{+0.25}_{-0.25}$
Quartz (flange)	^{238}U s.f.	42±4 ppb	$1.92^{+0.21}_{-0.21}$	$2.09^{+0.22}_{-0.22}$	$2.21^{+0.23}_{-0.23}$
Quartz (flange)	^{238}U (α,n)	42±4 ppb	$1.40^{+0.15}_{-0.15}$	$1.52^{+0.16}_{-0.16}$	$1.64^{+0.17}_{-0.18}$
			(10^{-6} cts/kg$_{CF_3I}$/day)		
Steel (pressure vessel)	(μ,n)		$4.55^{+0.49}_{-0.49}$	$4.87^{+0.52}_{-0.52}$	$5.12^{+0.54}_{-0.54}$
Glycol (hydraulic fluid)	^{238}U total	31±0.42 ppt	$4.40^{+0.48}_{-0.47}$	$4.76^{+0.51}_{-0.51}$	$5.06^{+0.53}_{-0.53}$
J-B Weld (epoxy)	^{232}Th (α,n)	0.097±0.012 ppm	$4.05^{+0.43}_{-0.43}$	$4.31^{+0.46}_{-0.46}$	$4.54^{+0.48}_{-0.48}$
Quartz (flange)	^{232}Th (α,n)	~30 ppb[a]	$3.88^{+0.42}_{-0.42}$	$4.22^{+0.45}_{-0.45}$	$4.54^{+0.48}_{-0.48}$
CF_3I (target)	(μ,n)		$3.74^{+0.40}_{-0.40}$	$3.99^{+0.42}_{-0.42}$	$4.21^{+0.44}_{-0.44}$
Steel (pressure vessel)	^{238}U (α,n)	~1 ppb	$0.95^{+0.10}_{-0.10}$	$1.04^{+0.11}_{-0.11}$	$1.11^{+0.12}_{-0.12}$
			(10^{-7} cts/kg$_{CF_3I}$/day)		
Steel (pressure vessel)	^{232}Th (α,n)	~1 ppb	$3.88^{+0.42}_{-0.42}$	$4.26^{+0.45}_{-0.46}$	$4.54^{+0.48}_{-0.48}$
Glycol (hydraulic fluid)	(μ,n)		$3.16^{+0.34}_{-0.34}$	$3.44^{+0.37}_{-0.37}$	$3.69^{+0.39}_{-0.39}$
Water (buffer fluid)	(μ,n)		$2.84^{+0.30}_{-0.30}$	$2.99^{+0.32}_{-0.32}$	$3.12^{+0.33}_{-0.33}$
Water (shielding)	^{222}Rn (α,n)	15.9 atoms/cm^3	$1.35^{+0.25}_{-0.30}$	$1.66^{+0.30}_{-0.29}$	$1.83^{+0.31}_{-0.34}$
			(10^{-8} cts/kg$_{CF_3I}$/day)		
Water (shielding)	(μ,n)		$5.23^{+0.57}_{-0.56}$	$5.54^{+0.61}_{-0.59}$	$5.92^{+0.63}_{-0.65}$
			(10^{-3} cts/kg$_{CF_3I}$/day)		
Total			$8.33^{+0.48}_{-0.48}$	$9.05^{+0.52}_{-0.52}$	$9.63^{+0.55}_{-0.55}$

Figure from
D. Fustin, PhD Thesis, 2011.

Efficiency Uncertainty

- Existing calibration data with ^{241}Am-Be neutron sources do not tightly constrain efficiency near threshold. We need more calibration data.
- In interim, we show range of possible results with range of efficiency models that fit existing neutron source data.

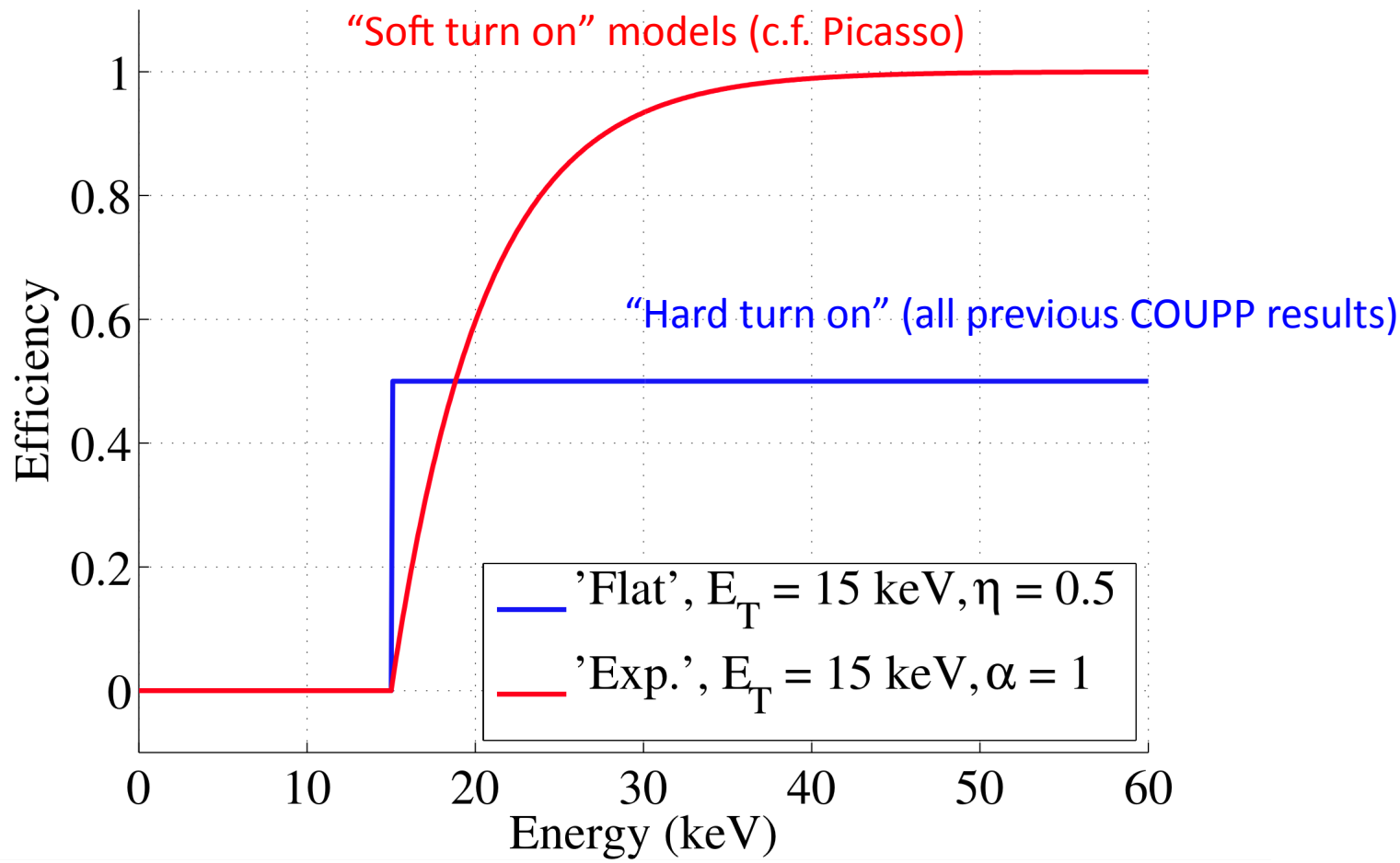

CIRTE (COUPP Iodine Recoil Experiment)

- Measure small angle scattering of pions on a bubble chamber using a silicon pixel telescope. Scattering angle is a measure of nuclear recoil energy for a known beam energy and recoil nucleus.
- Bubble nucleation efficiency is ratio of bubbles to recoil events in the chamber.
- Can hope to measure 0.0015 radian deflections of the beam, corresponding to 10 keV iodine recoils.
- Took first data in Feb 2012.

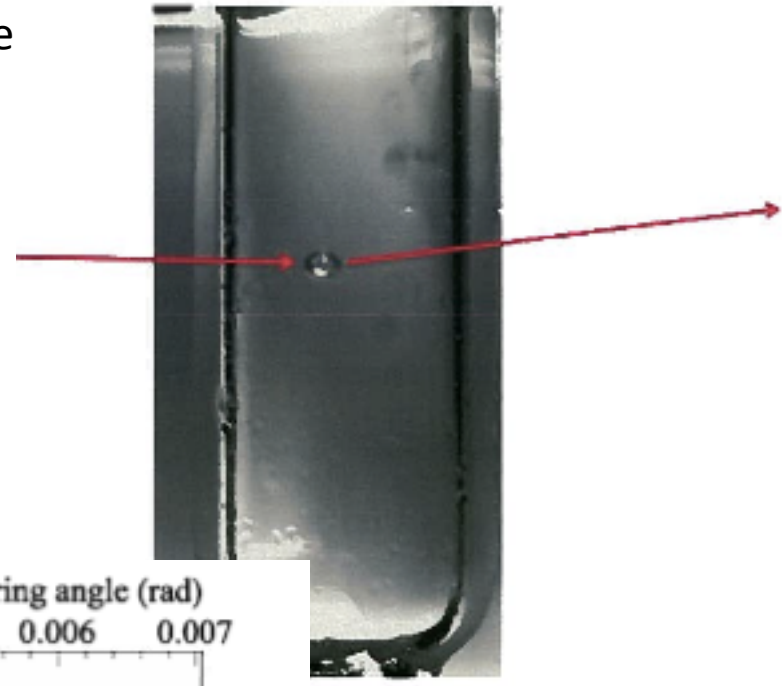

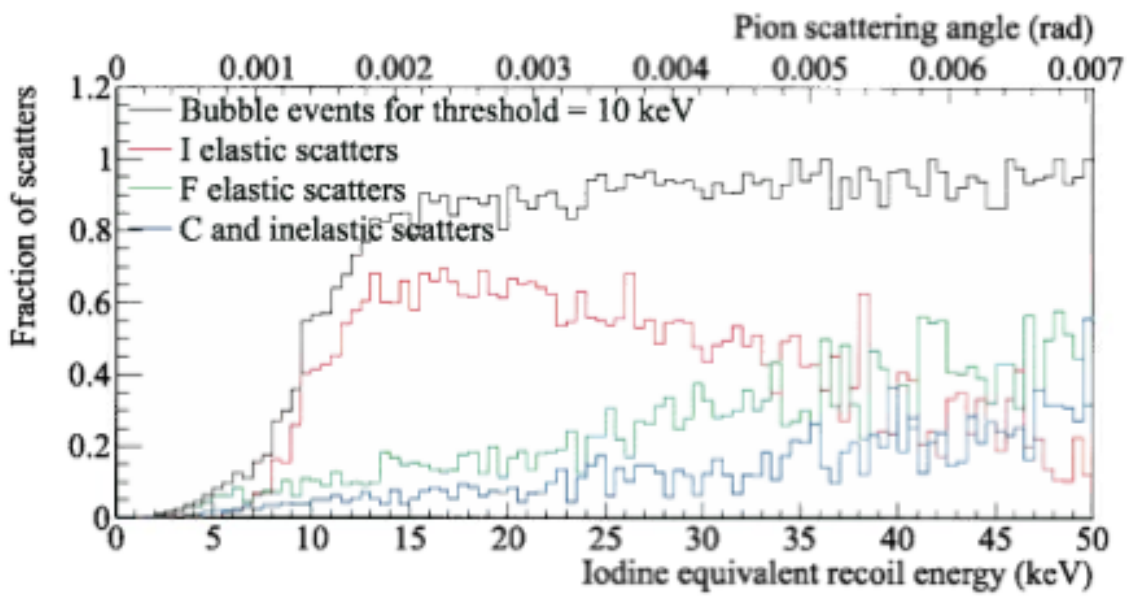

Figure 1 – Fraction of scatters with a bubble as a function of scattering angle and equivalent iodine recoil kinetic energy for a sharp 10 KeV bubble nucleation threshold.

COUPP-4 Radiopurity Upgrades

- Reduce known sources of neutron background by two orders of magnitude:
  - Viewports- replace glass with synthetic fused silica. Fused silica viewport has been received from vendor, ready to install.
  - Low activity acoustic sensors– expected within a few weeks. Screening of materials at U. Chicago indicates new sensors will contribute 0.5 background events per year.
  - With these improvements, total expected neutron background in COUPP-4 is <1 event per year from Monte Carlo.
  - Installation expected by early April.

COUPP-60 Status

- Final phase of testing at Fermilab concluded in Fall 2011.
- Detector was disassembled in December and is now above ground in pieces.
- Pieces are being cleaned and modified (details follow).
- Parts should begin arriving at SNOLAB in April.

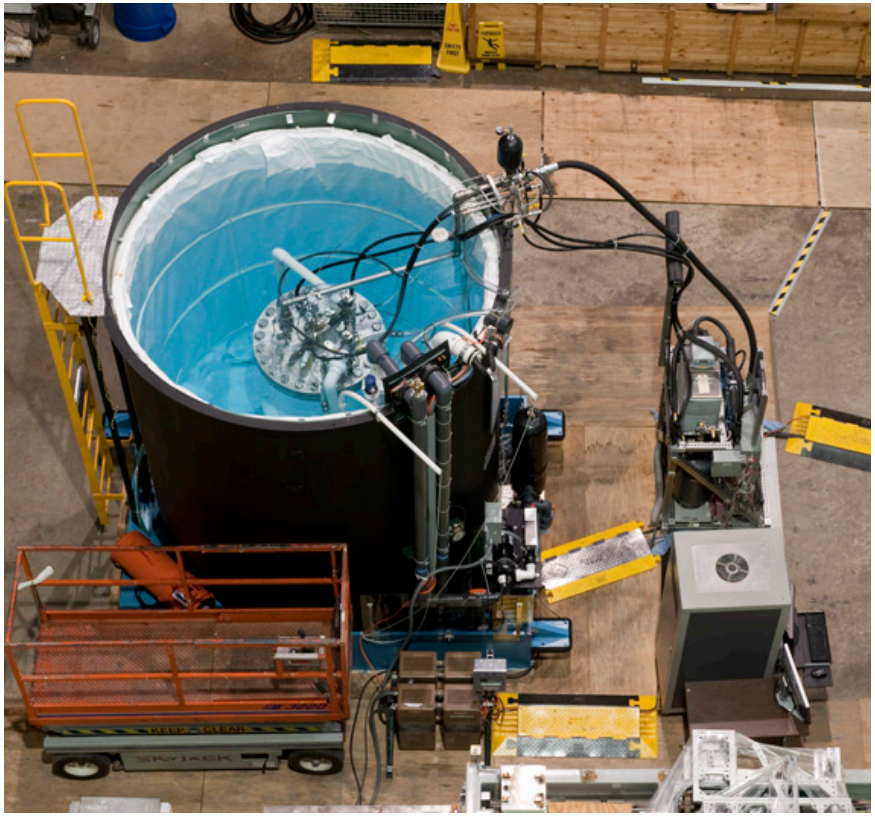

COUPP-60 Detector

COUPP-60 Tests at Fermilab in 2011

- Goals: avoid photodissociation of CF_3I, reduce surface boiling:
  - Added Na_2SO_3 to water at 5 mMol/L.
  - Removed CO_2 from CF3I with molecular sieve.
- Results (Fall, 2011):
  - No observed image darkening after 50 day run.
  - Surface rate decreased from 150 cts per hour to 15 counts per hour at 7 keV threshold. Total residual rate (bulk+ surface) dominated by NuMI beam coincidences.

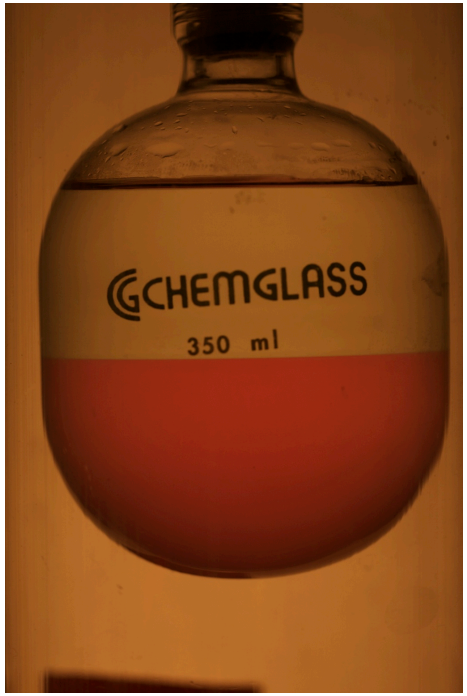

CF_3I breakdown under illumination

New Outer Pressure Vessel

- Meets Canadian codes. Will be TSSA approved and registered in Ontario.
- Low radioactivity stainless steel to reduce neutron background to < 1 event per year.
  - 1 ppb Uranium would produce ~2E-5 events/ kg-day from neutrons- consistent with sensitivity goal for COUPP-60.
  - Steel comes from supplier identified by Miniclean (Outokumpu). Typical samples in SNOLAB radiopurity database are an order of magnitude better than we need.
- Steel samples from actual vessel material to be counted starting next week.
- Fused silica windows for photography. Four ports allow imaging of 75 kg of CF3I.
- Contract awarded to All- Weld (Toronto) in January. Expect delivery in May.

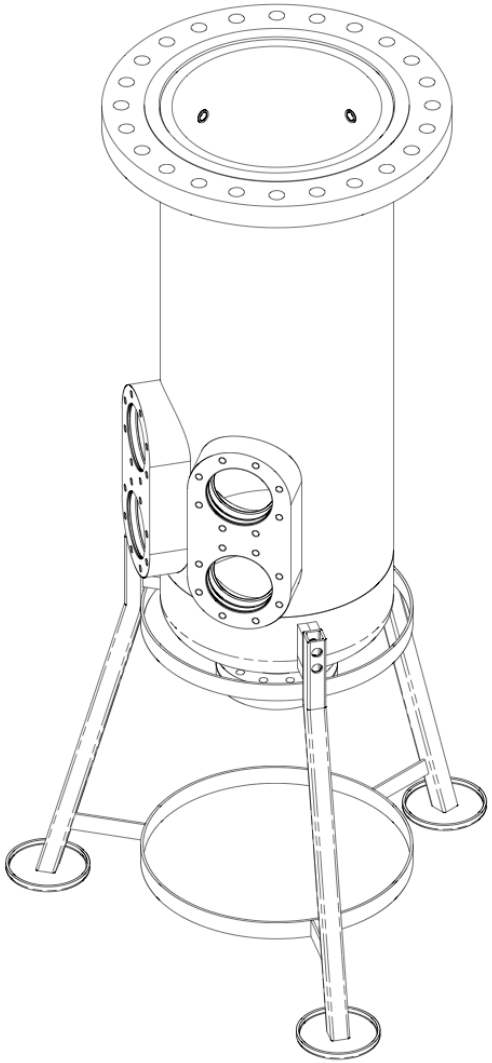

Other Detector Improvements

- Control system will expand to include more environmental monitoring and failure detection capability (temperatures, humidity, CF3I and glycol leaks). Better remote control of experiment.
- Higher speed, higher resolution cameras (2 megapixels x 100 frames/ second). Four cameras will photograph 75 kg of CF3I with spatial resolution better than existing 4 kg chamber. Trigger on ~1 mm diameter bubbles.
- Better reflector geometry to improve uniformity of lighting.

COUPP-60 Water Tank

- Engineering now complete (McFarlene, Morissette, Liimatainen)
- Based on commercially available bolted tank for agriculture.
- Panels for tank body received last year at SNOLAB. Some procurements remain for lid, insulation.
- Installation is SNOLAB responsibility with Fermilab providing water handling system.
- Schedule calls for assembly in May- June.

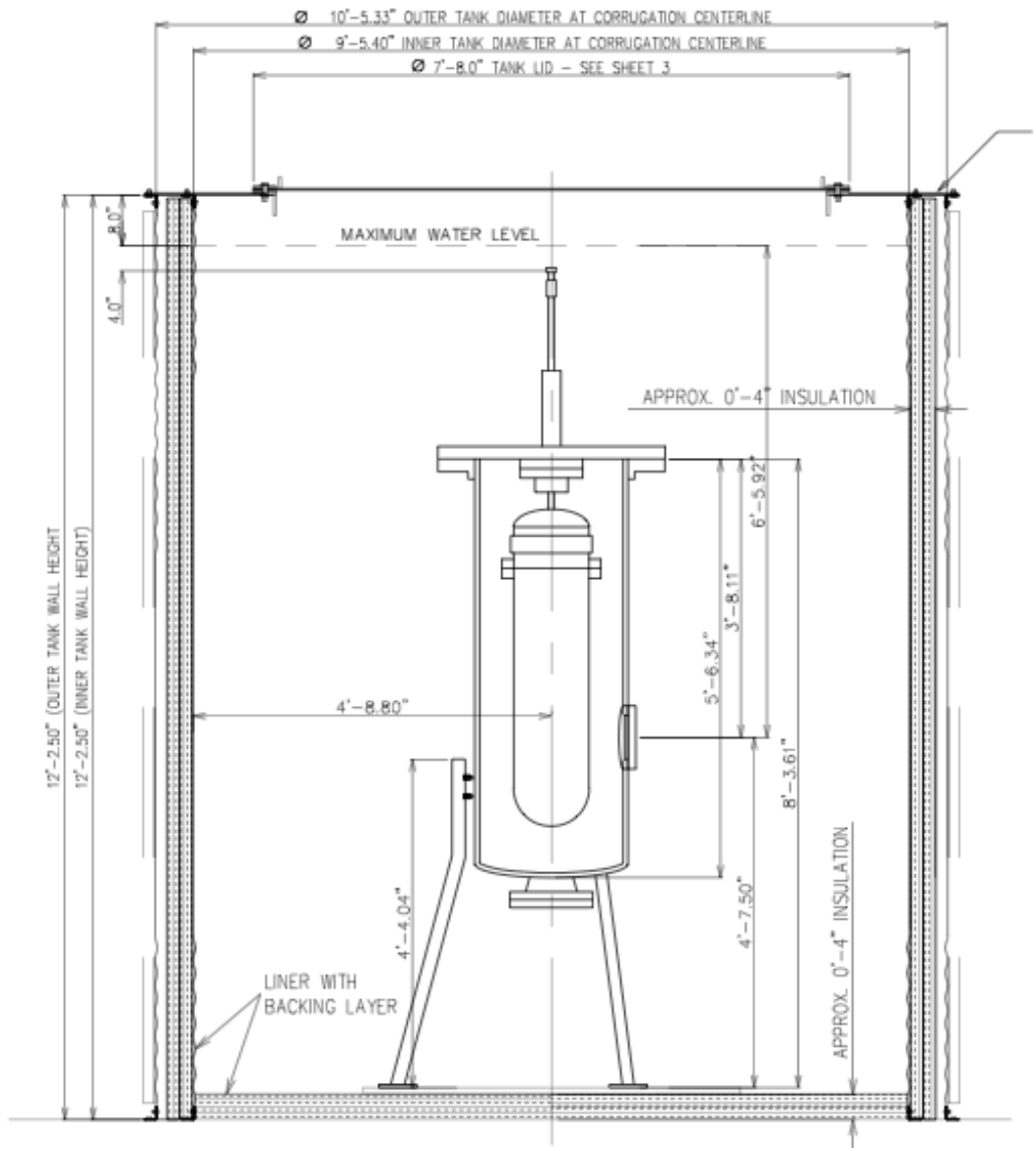

COUPP-60 Equipment and Piping Layout- Ladder Labs C1 Drift

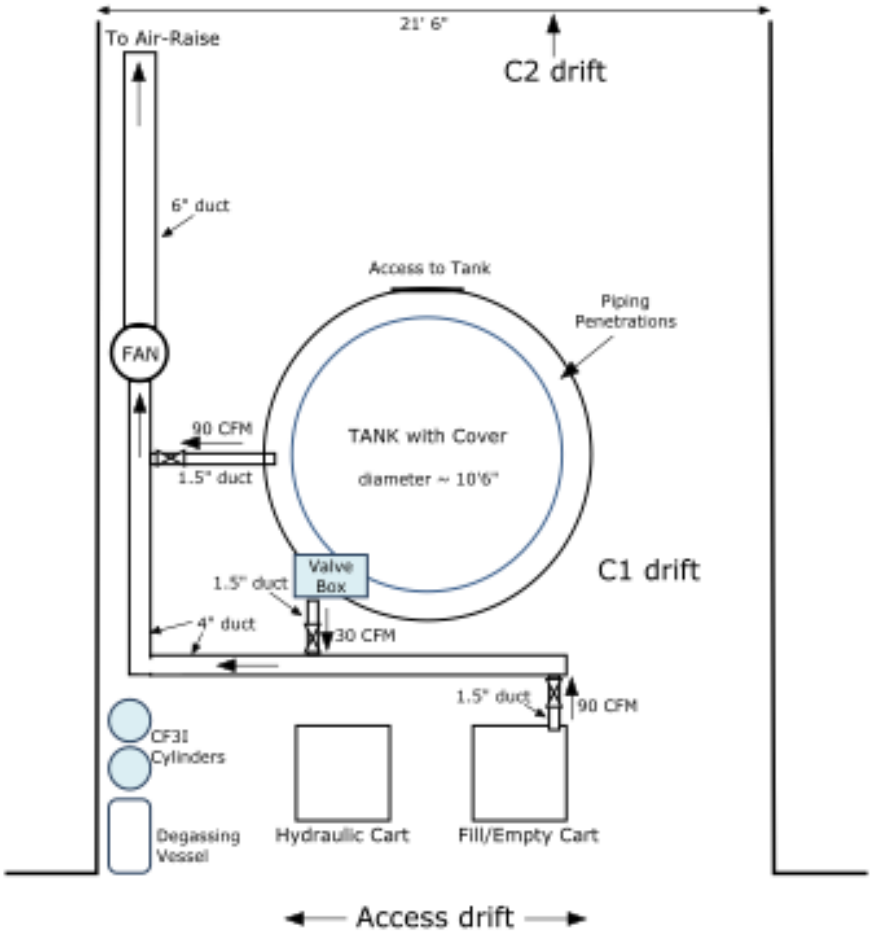

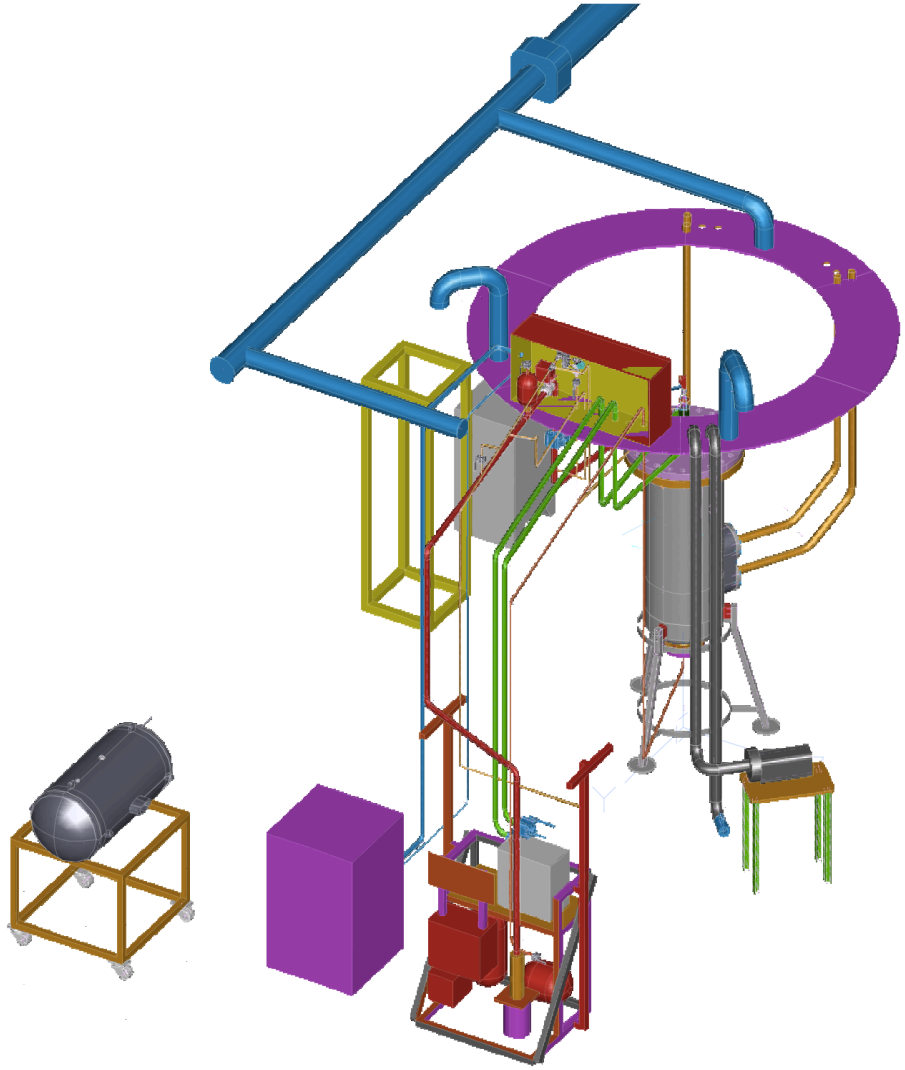

Safety- CF3I Inhalation

- CF3I is a “cardiac sensitization agent” with onset of effects (increase in heart rate) observed above 0.4% concentration in air.
- Risk evaluation follows established Fermilab procedures for oxygen deficiency hazards:
  - Failure probabilities for each component in piping system are determined using a standard engineering table
    - e.g. hydraulic hose failure 3E-6 failure probability per hour of service.
  - Leak rate of CF3I is evaluated for each possible failure event.
  - Human exposure at above 0.4% level is counted as a fatality.
  - Probability per hour of a fatality for whole experiment is estimated by summing over failure modes.
  - Acceptable fatality probability is 1E-7 per hour (1 per 1000 years), corresponding to “ODH Hazard Class 0”.

Risk Analysis Table

CF3I analysis in Access tunnel by COUPP

Normal operations with the bubble chamber isolated

Air Exhaust	Q	TC, min. V/Q												
1,000	cfm	34.00												
Volume	V	Elevation		Pressure									Rate without mitigation	Rate with mitigation
34,000	ft^3	-6600 ft		945 mmHG										
ITEM	in/outside of enclosures	TYPE	N	P FAIL RATE	GROUP FAIL RATE	R, cfm leak rate	Q/R LEAK/VENT	Time (t1) min.	fCF3I{t1} FRACT CF3I	Time (t2) min.	fCF3I{t2} FRACT CF3I	D(t2) Exposure Factor	X Exp. Rate	X* Exp. Rate
BC 1" tube	inside	Bubble Ch.	1	1.00E-09	1.00E-09	684	0.6840	0.25	0.50%	0.50	1.00%	1.00	1.0E-09	1.0E-09
BC 1" Valve	inside	Bubble Ch.	1	1.00E-08	1.00E-08	684	0.6840	0.25	0.50%	0.50	1.00%	1.00	1.0E-08	1.0E-08
BC Valves	inside	Bubble Ch.	2	1.00E-08	2.00E-08	29	0.0290	5.00	0.40%	10.00	0.74%	1.00	2.0E-08	2.0E-13
BC Bellows	inside	Bubble Ch.	1	1.00E-08	1.00E-08	10	0.0100	5.00	0.14%	10.00	0.25%	0.27	2.7E-09	2.7E-14
conn. rupture	inside	Bubble Ch.	5	1.00E-08	5.00E-08	29	0.0290	5.00	0.40%	10.00	0.74%	1.00	5.0E-08	5.0E-13
conn. leak	inside	Bubble Ch.	5	1.00E-08	5.00E-08	0.2	0.0002	5.00	0.00%	10.00	0.01%	0.00	0.0E+00	0.0E+00
instruments	inside	Bubble Ch.	1	1.00E-08	1.00E-08	29	0.0290	5.00	0.40%	10.00	0.74%	1.00	1.0E-08	1.0E-13
welds	inside	Bubble Ch.	6	3.00E-09	1.80E-08	29	0.0290	5.00	0.40%	10.00	0.74%	1.00	1.8E-08	1.8E-13
Pipes	inside	hydraulic	13	1.00E-09	1.30E-08	10	0.0100	5.00	0.14%	10.00	0.25%	0.27	3.6E-09	3.6E-14
Pipes	outside	hydraulic	1	1.00E-09	1.00E-09	10	0.0100	5.00	0.14%	10.00	0.25%	0.27	2.7E-10	2.7E-10
Elbows	inside	hydraulic	30	3.00E-07	9.00E-06	10	0.0100	5.00	0.14%	10.00	0.25%	0.27	2.5E-06	2.5E-11
Tees	inside	hydraulic	25	3.00E-07	7.50E-06	10	0.0100	5.00	0.14%	10.00	0.25%	0.27	2.1E-06	2.1E-11
Valves	inside	hydraulic	50	1.00E-08	5.00E-07	10	0.0100	5.00	0.14%	10.00	0.25%	0.27	1.4E-07	1.4E-12
Valves	outside	hydraulic	0	1.00E-08	0.00E+00	10	0.0100	5.00	0.14%	10.00	0.25%	0.27	0.0E+00	0.0E+00
connections	inside	hydraulic	200	1.00E-08	2.00E-06	10	0.0100	5.00	0.14%	10.00	0.25%	0.27	5.5E-07	5.5E-12
connections	outside	hydraulic	0	1.00E-08	0.00E+00	10	0.0100	5.00	0.14%	10.00	0.25%	0.27	0.0E+00	0.0E+00
hoses	inside	hydraulic	7	3.00E-06	2.10E-05	10	0.0100	5.00	0.14%	10.00	0.25%	0.27	5.8E-06	5.8E-11
hoses-metal	outside	hydraulic	0	1.00E-08	0.00E+00	10	0.0100	5.00	0.14%	10.00	0.25%	0.27	0.0E+00	0.0E+00
instruments	inside	hydraulic	11	1.00E-08	1.10E-07	10	0.0100	5.00	0.14%	10.00	0.25%	0.27	3.0E-08	3.0E-13
instruments	outside	hydraulic	0	1.00E-08	0.00E+00	10	0.0100	5.00	0.14%	10.00	0.25%	0.27	0.0E+00	0.0E+00
		TOTAL											1.1E-05	1.1E-08

*Note: Mitigation is achieved using localized ventilation of tank and hydraulic valve box.
The tank air space, hydraulic valve box and fill/empty cart must be exhausted to the air raise.

Mitigation of CF3I Inhalation Hazard

- Principle: provide enhanced containment and ventilation in areas around pipes and vessels. CF3I sensors will alarm in case of leak and turn on exhaust blowers.
- Proposed plan is described in Fermilab engineering note by Dell Allspach.
- SNOLAB people have looked at plan but no detailed feedback yet.
- We expect a formal review organized by lab director.

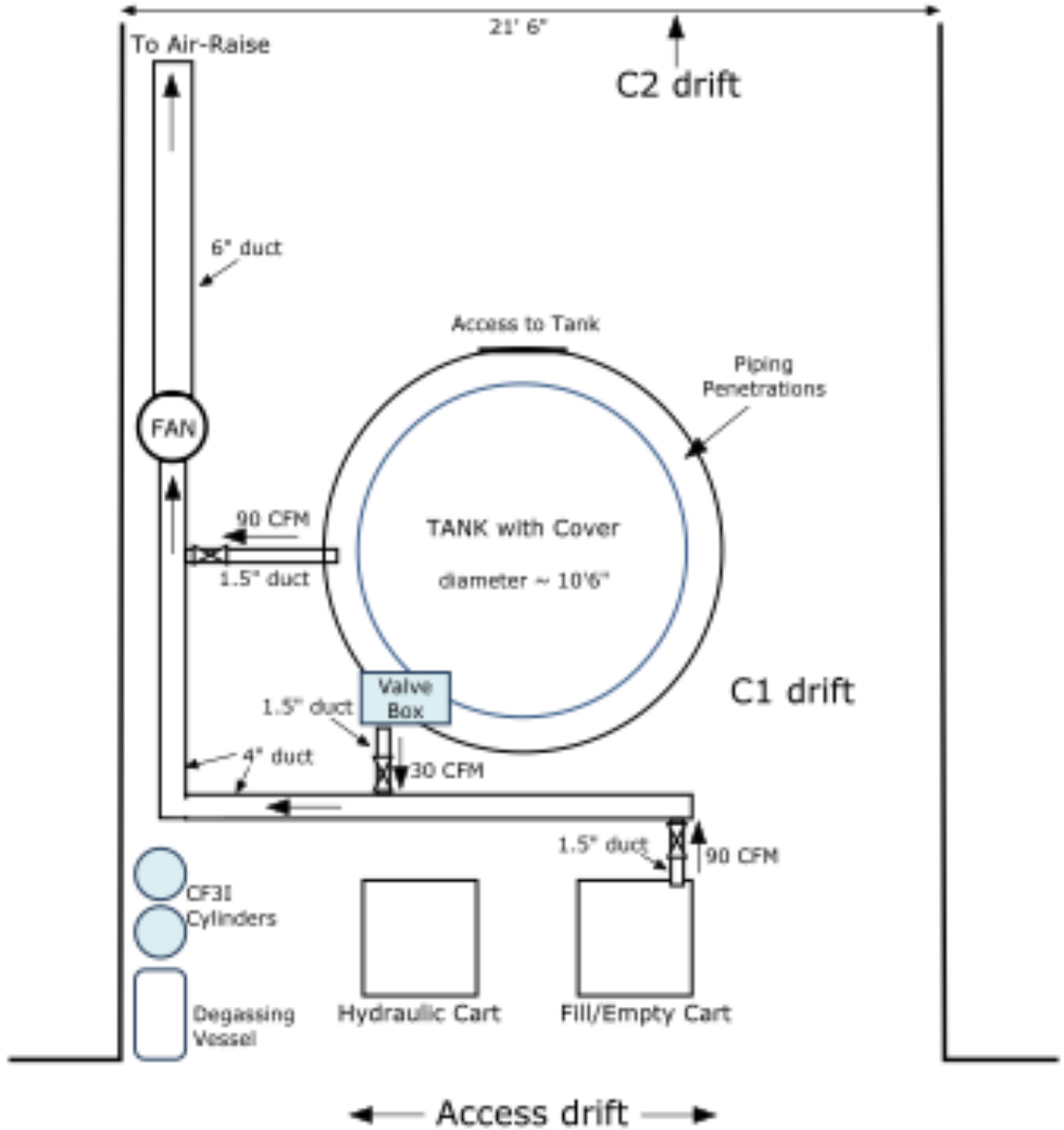

Safety- Other Issues

- Pressure
  - Build to ASME, Ontario codes. TSSA review of vessels and piping.
  - Potential exists for delays, costs depending on TSSA response.
- Fire
  - No major issues identified. Few combustible materials.
  - Studying how to interlock smoke detector system with electrical panels.
- Electrical
  - Modifications underway to control boxes to meet Snolab requirements for separation of AC and low voltage power.
- Seismic
  - Based on ITASCA study of largest likely seismic event from rock bursts commissioned for SNO+
  - 1% chance per year of "design event": a 4.3 Nuttli scale nearby rock burst: accelerations up to 50 g for short periods of time (~10 milliseconds) and ground motions up to a few inches.
  - We are trying to understand how to ensure that the chamber survives or fails gracefully with an acceptable CF3I leak rate.

COUPP-60 Project Management

- Formal project management plan drafted in Fall, 2011. Defines roles and responsibilities for Project Manager and four Subsystem Managers:
    - Project Manager- Sonnenschein. Reports to Fermilab Particle Physics Division Head.
        - Bubble Chamber Components & DAQ - Dahl
        - Bubble Chamber Installation- Lippincott
        - Site Preparation- Ramberg
        - COUPP4 & Calibration- Brice
- Most important project management tool is a detailed WBS linked to budget and schedule information. This is maintained using web-based software (www.clarizen.com) that allows project team to independently update plan as new information comes in.
- We review schedule information each week and budget each month.
- Project status is reported to Fermilab management and DOE on monthly basis.

WBS Example

- Tasks have assigned resources (people + money), schedule information and brief descriptions of the scope of the work. Level of detail and quality of information vary, with more attention paid to critical path items.

Name	Manager	Start Date	Duration	% Complete	M&S	Travel	Total Estimate Cost
COUPP	Sonnenschein	12/07/10	501 d	10	359,764	68,500	813,083
Area 1: Chamber Components	Dahl	12/07/10	402 d	23	159,014	1,000	260,674
Area 2: COUPP-60 Installation	Lippincott	12/07/10	501 d	18	105,600	52,000	315,526
Chemical Tests	Lippincott	07/01/11	207 d	21	10,000		58,122
NuMI run fall 2011	Lippincott	07/01/11	131 d	100	10,000		58,122
Make decision regarding purification	Lippincott	11/01/11	120 d	0			
CF3I	Lippincott	03/01/12	120 d	0	51,000		59,160
Purchase storage vessel	Lippincott	03/01/12	60 d	0	1,000		1,160
Purchase CF3I	Lippincott	05/24/12	60 d	0	50,000		58,000
Disassembly of bubble chamber at NuMI	Lippincott	10/14/11	63 d	100			5,851
High Purity Fluid Skid	Lippincott	12/07/10	407 d	28	6,500		20,179
Move from NuMI to Lab 3	Lippincott	12/27/11	1 d	100			
Disassembly and inspection	Lippincott	01/19/12	20 d	100			1,938
Cleaning	Lippincott	02/16/12	10 d	50			4,886
Reassambly	Lippincott	03/01/12	10 d	0	2,000		5,228
Crate	Lippincott	05/17/12	5 d	0	1,100		4,184
Ship to SNOLAB	Lippincott	05/24/12	5 d	0	1,400		1,624
Ship underground	Lippincott	05/31/12	5 d	0			
Consumables	Lippincott	12/07/10	1 d	0	2,000		2,320
Assemble underground	Lippincott	06/07/12	5 d	0			

COUPP Milestones 3/1/12

Name	Due Date
Pass NuMI Chemical Test	11/15/11
New Outer Vessel Vendor Selection	12/06/11
CIRTE Chamber Ready	02/01/12
Pass SNOLAB Safety Review	**04/02/12**
Start COUPP-4 Run 2	04/02/12
New Camera Decision	04/11/12
Pass Optics and Illumination Test	05/09/12
Outer Vessel Ready	**05/23/12**
Acoustic sensors ready for installation	06/01/12
Pass Video Acquisition Test	06/20/12
Inner Vessel Ready	06/20/12
System Test-- No IV	**08/07/12**
Start Commissioning	09/11/12
Ready for Physics Runs	**11/06/12**

COUPP-60 Risks

Risk	L	I	L*I
~~Funding delay DOE~~	4	3	12
~~Funding loss NSF or DOE~~	2	5	10
~~Chemical stability. Addition of Na2SO3 does not work~~	3	3	9
New cameras do not meet requirements.	3	2	6
Problems with new optics and illumination scheme	3	2	6
Problems with new outer vessel	3	2	6
Leaks in camera enclosure	2	3	6
Small leaks in OV	3	2	6
Need to reclean IV	3	2	6
Hydraulic system leaks	3	2	6
IV broken in shipment	2	3	6
Safety. Vent scheme not accepted by review committee	3	2	6
Regulatory actions TSSA Canadian certification	2	3	6
Loss of key personnel	3	2	6

Likelihood (L) is rated on a scale of 0-4 (0% 0.01% 1% 25% >25%). Impact is 1,2,3 or 5 (1 is a <3 month delay, 2 is a 3-6 month delay, 3 is a 6-12 month delay, 5 is project cancellation).

Collaboration News

- New groups:

Virginia Tech- Material science (Shashsank Priya, Deepam Maurya)

Universitat Politecnica de Valencia- Acoustic signal modeling (Miquel Ardid, Manuel Bao-Cabo)

- New people:

Russell Nielson, U. Chicago postdoc from Stanford EXO group

Alan Robinson, U. Chicago grad student

- Graduations:

Drew Fustin, Ph.D., U. Chicago

Josh Behnke, M.S., IUSB

Funding

- NSF
  - Continuing base funding for students and postdocs at U. Chicago and IUSB.
  - 600 k$/year from DUSEL S4, last three years
  - NSF renewal of KICP– more student, postdoc support, some equipment.
  - NSF contribution pays for most COUPP-4 operations.
- DOE
  - Base funding covers 4 scientist FTEs at Fermilab.
  - 1095 k$ received in FY11-FY12 for COUPP-60 installation. This fully funds the installation of the detector at SNOLAB according to current budget, with modest contingency for dealing with unexpected problems.
  - Additional R&D funds help with Fermilab participation in COUPP-4 and calibration detectors.

Conclusions

- COUPP4 being rebuilt to reach <1 neutron event per year. Will single bubble excess persist?
- We have increasingly detailed background models for both COUPP-4 and COUPP-60, supported by radiopurity measurements of detector components at SNOLAB and U. Chicago.
- Improved efficiency measurements underway- CIRTE and ^{88}YBe neutrons.
- COUPP-60 Issues
  - Chemistry tests at Fermilab in Fall 2011 went well– solved darkening and surface boiling problems.
  - Safety issues are believed to be understood– expecting a focused review by SNOLAB director's committee.
  - Funding for underground installation received from DOE.
- Schedule
  - Detailed installation schedule exists (and slips…)
  - Critical path pressure vessel procurement going well.
  - Ship detector components to SNOLAB beginning May 2012
  - Detector operational in Nov 2012