PIP-2 Linac Complex Process Power Arc Flash/Load Flow Analysis

Luis Bravo
Supervisor: Ryan Crawford
Northern Illinois University – Aspire Fellow
7/28/22

About Me

Luis Bravo

- Northern Illinois University
- Expected Graduation May 2023
- Electrical Engineering Major
- Aspire Fellow
- Worked in HVAC and Maintenance ~ 6 years

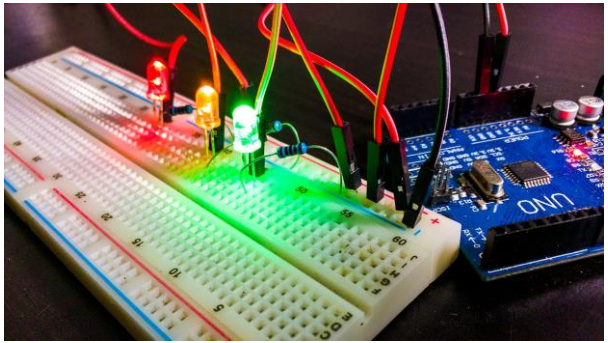

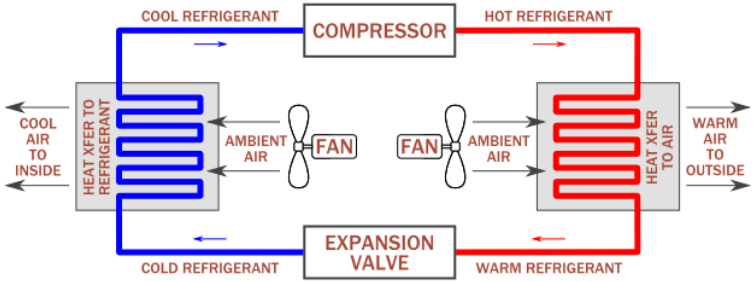

Outline

PIP 2 Linac Complex Process Power

- Etap Program
- Load Flow Analysis
- Arc flash/Blast information
- Arc flash/short circuit analysis
- NFPA labels on dangers from calculated results

ETAP (Electrical Transient Analyzer Program)

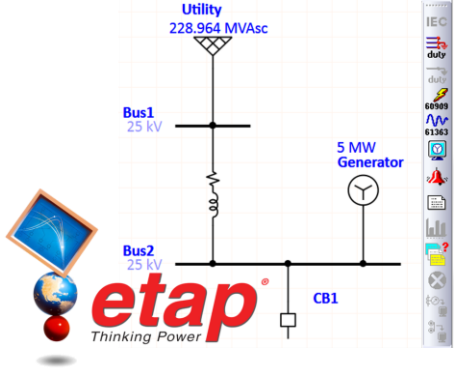

- Electrical Transient Analyzer Program is a software used making schematic and analyzing Single Line Electrical Diagrams (SLEDS)
- SLEDs are the simplest symbolic representation of an electrical power system
- A single line in the diagram often represent more than one conductor for simplicity and ease of view
- Electrical components in three phase systems such as circuit breakers, transformers, capacitors, and bus bars are shown connected to a single line in the diagram to represent all three phases in application
- Electrical components in DC also show only 1 conductor representing the supply and return paths

- ETAP is used in a wide range of industries including generation, transmission, distribution, industrial, transportation, and Low Voltage.
- Load Flow AC/DC analysis
- IEEE, ICEA, NEC requirement tools
- Renewables
- Panel Schedules

Load Flow Analysis

- Load Flow analysis is a fundamental analysis
- ETAP has the capability to simulate and calculate bus voltages, branch power factors, currents, and the flow of power throughout the electrical system
- The red numbers represent the percentage of the power that flows through along with the real power number being P(Watts) and the imaginary part being Q (Reactance)
- (2308+j101.8) = complex power

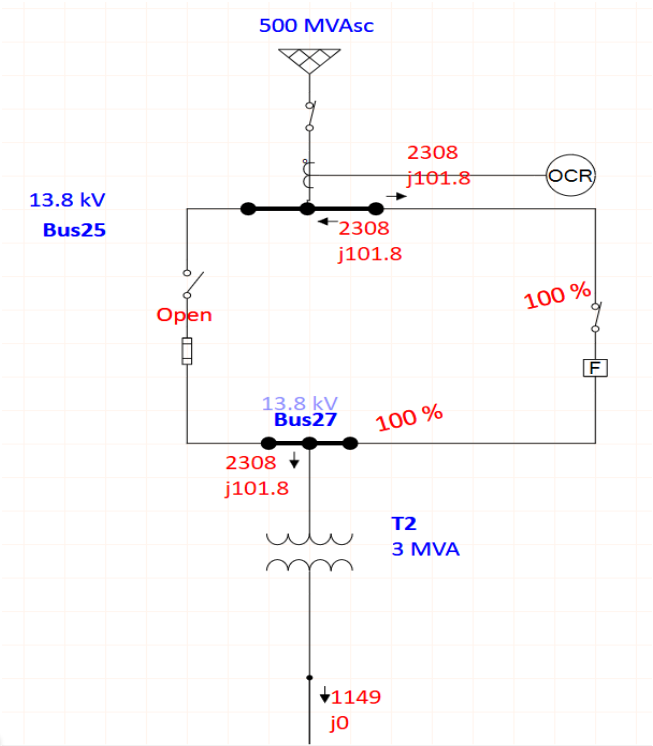

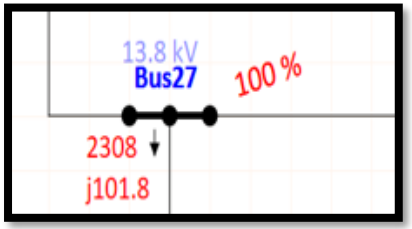

Load Flow Analysis (Cont.)

- ETAP along with other engineering programs save a lot of time doing calculations and simulations
- Very impressive Verified and Validated(V&V) results from Etap test groups compared to the published case studies
- Less than 1% difference in calculations for ETAP vs Published study results for load flow
- ETAP results and the MATLAB hand calculated results have a percent difference less than 0.001% in all cases for Arc flash

$$\text{Complex Power} = \mathbf{S} = P + jQ = \mathbf{V}_{rms}(\mathbf{I}_{rms})^*$$
$$= \mathbf{V}_{rms}\mathbf{I}_{rms}\underline{/\theta_v - \theta_i}$$
$$\text{Apparent Power} = S = |\mathbf{S}| = \mathbf{V}_{rms}\mathbf{I}_{rms} = \sqrt{P^2 + Q^2}$$
$$\text{Real Power} = P = \text{Re}(\mathbf{S}) = S\cos(\theta_v - \theta_i)$$
$$\text{Reactive Power} = Q = \text{Im}(\mathbf{S}) = S\sin(\theta_v - \theta_i)$$
$$\text{Power Factor} = \frac{P}{S} = \cos(\theta_v - \theta_i)$$

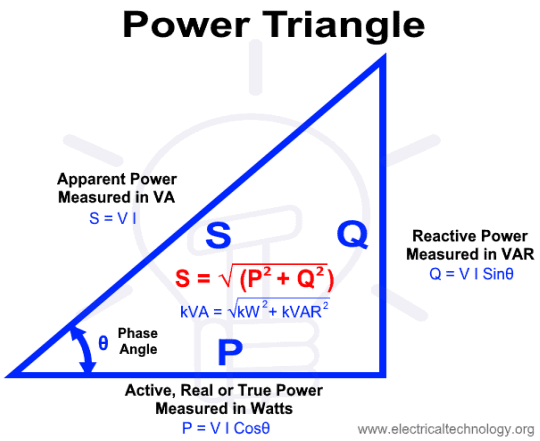

What is Arc flash/Arc blast?

- Electrical current flowing through air gap (ionized air)
- Turning on and off equipment (high voltage switches)
- phase to phase or phase to ground
- Arc flash temperatures can reach 19,400 C (35,000 F)
- Arc flash is specifically the heat and light produced by the arc fault(skin burns and vaporization of metals may occur etc.)
- Arc blast is the mechanical supersonic shockwave(Hearing loss due to pressure wave, blasts from debris etc.)

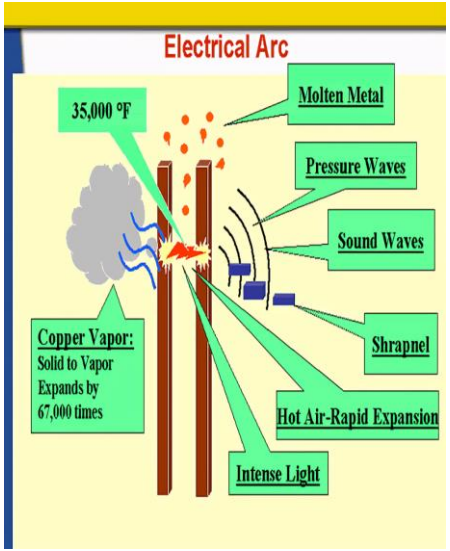

Arc Flash/ Short Circuit Analysis (Cont.)

- Arc flash Boundary
- Incident energies
- PPE classification
- Labels generated from etap along with simulation

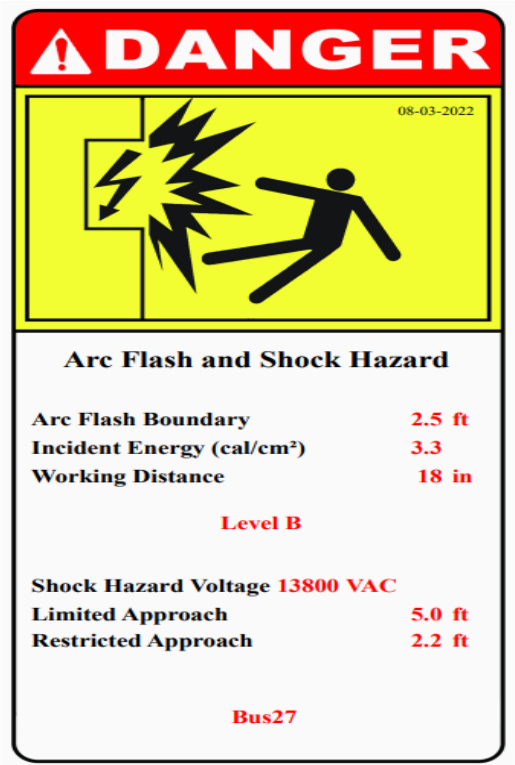

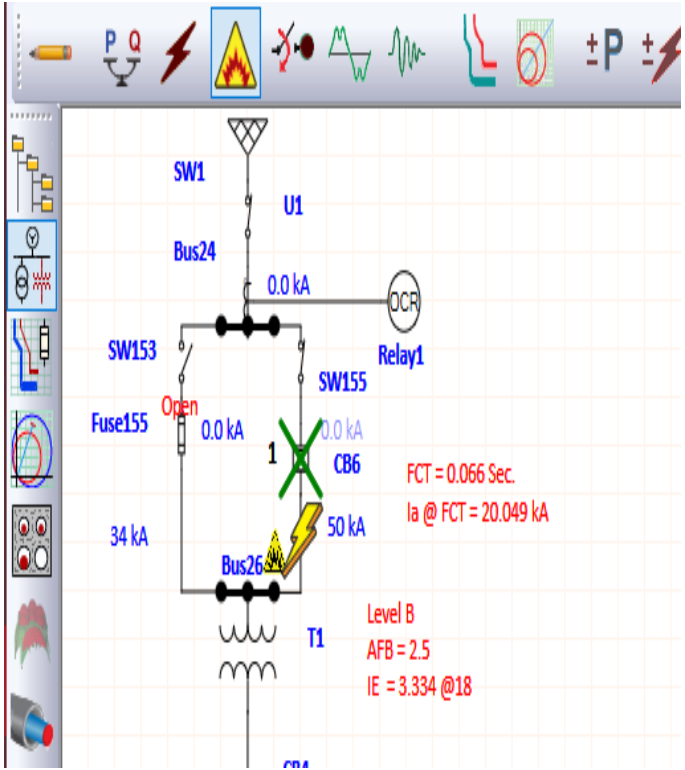

Arc Flash/ Short Circuit Analysis (example fuse vs circuit breaker)

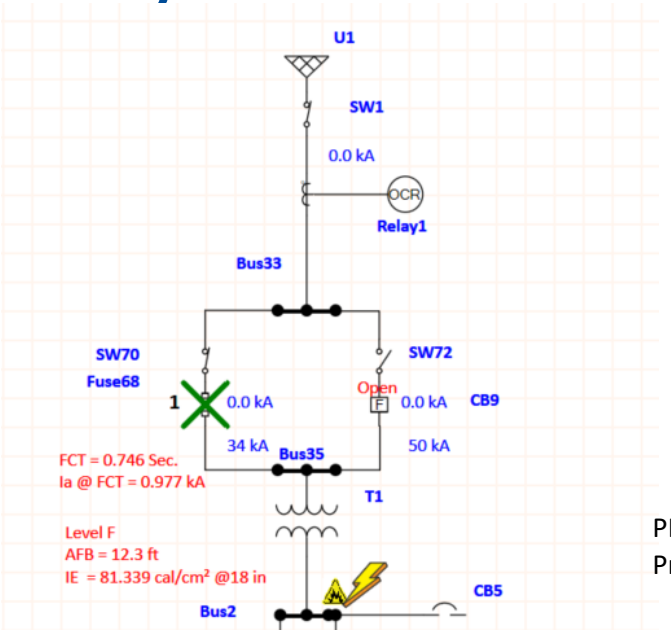

PIP 2 LINAC Complex
Process Power Service A

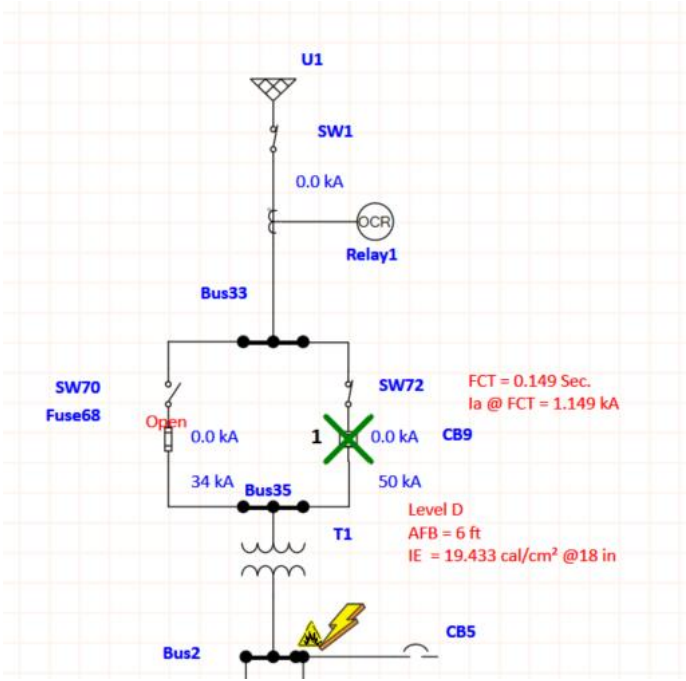

	IE(calories/cm^2)	Fault Clearing Time(second)	AFB(ft)	I_{arc}(kA)
Fuse	**81.39**	**0.746**	12.3	0.977
Circuit Breaker	**19.43**	**0.149**	6	1.149

PPE for Arc Flash/Blast

- Etap quickly assesses incident energies along with arc flash boundaries
- Creates safety labels enforced by NFPA and OSHA

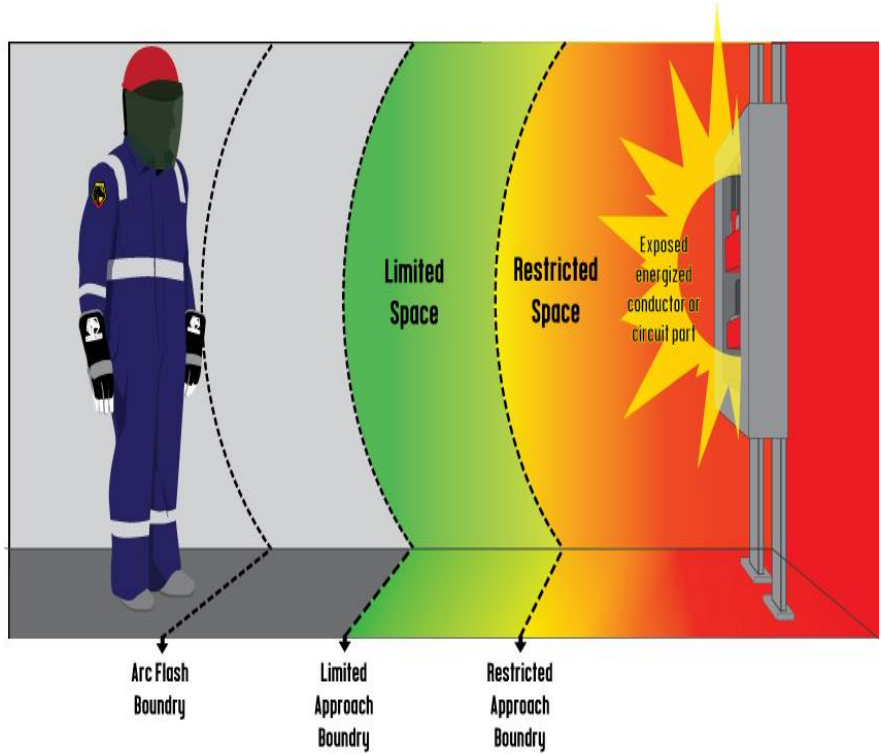

PPE CATEGORY 1	PPE CATEGORY 2	PPE CATEGORY 3	PPE CATEGORY 4
Minimum Arc Rating of **4 cal/cm²**	Minimum Arc Rating of **8 cal/cm²**	Minimum Arc Rating of **25 cal/cm²**	Minimum Arc Rating of **40 cal/cm²**
Arc Rated Clothing: • AR long-sleeve shirt and pants, or AR coverall • AR face shield, or AR flash suit hood • AR jacket, parka, rainwear, or hard hat liner (as needed)	**Arc Rated Clothing:** • AR long-sleeve shirt and pants, or AR coverall • AR flash suit hood, or AR face shield and AR balaclava • AR jacket, parka, rainwear, or hard hat liner (as needed)	**Arc Rated Clothing:** • As required: AR long-sleeve shirt, AR pants, AR coverall, AR flash suit jacket, and/or AR flash suit pants • AR flash suit hood • AR gloves • AR jacket, parka, rainwear, or hard hat liner (as needed)	**Arc Rated Clothing:** • As required: AR long-sleeve shirt, AR pants, AR coverall, AR flash suit jacket, and/or AR flash suit pants • AR flash suit hood • AR gloves • AR jacket, parka, rainwear, or hard hat liner (as needed)
Protective Equipment: • Hard hat • Safety glasses or safety goggles • Hearing protection (with inserts) • Heavy-duty leather gloves • Leather footwear (as needed)	**Protective Equipment:** • Hard hat • Safety glasses or safety goggles • Hearing protection (with inserts) • Heavy-duty leather gloves • Leather footwear	**Protective Equipment:** • Hard hat • Safety glasses or safety goggles • Hearing protection (with inserts) • Leather footwear	**Protective Equipment:** • Hard hat • Safety glasses or safety goggles • Hearing protection (with inserts) • Leather footwear

Moving Forward

- Do arc flash and load flow analysis on all projects
- Compare results with different power system devices to lower the incident energy and speed up FCT
- Have documentation for all pieces of equipment with data from arc flash and load flow analysis
- With more documentation and labels, we can make Fermilab a safer place

Acknowledgement

Thank you to

- Ryan Crawford, Chris Jensen, and Ramfis Colon for their guidance and opportunity to be part of the team to work on PIP2
- All the engineers on the team including Matthew Davidson, Siddharth Poopathi, Peter Drechsler, Ty Omark, Nick Gurley, and Dennis Barak for helping me with any issues I came across and very willingly passing along a lot of knowledge
- The whole Team that coordinates the internships along with all the people that helped with the process and made this opportunity a reality

Questions?

Case study #1 for Load Flow Calculations (Etap vs Published results) extra slides

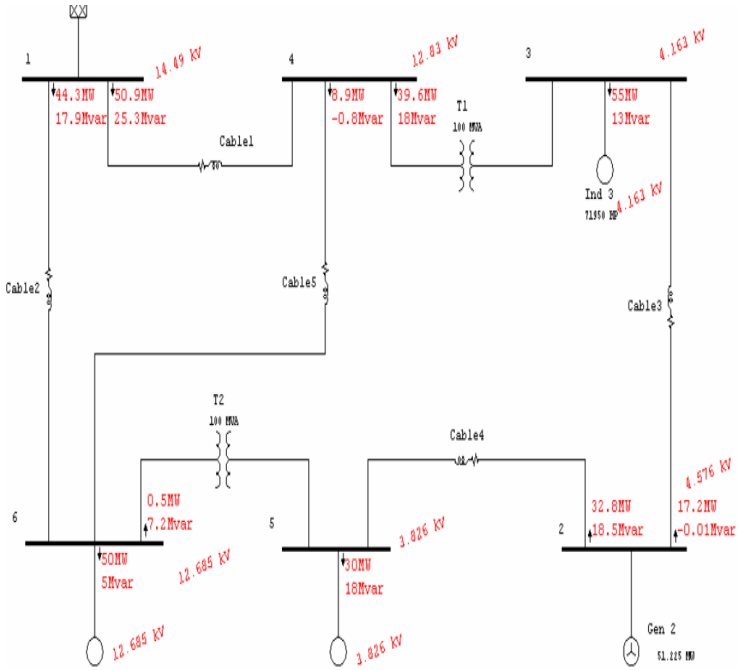

COMPARISON BETWEEN ETAP AND REFERENCE FOR LOAD FLOW											
BUS	REFERENCE		ETAP								
			AGS			NR			FD		
	% Mag.	Ang.	% Mag.	Ang.	% Diff Mag	% Mag.	Ang.	% Diff Mag	% Mag.	Ang.	% Diff Mag
1	105	0	105	0	**0.00**	105	0	**0.00**	105	0	**0.00**
2	110	-3.34	110	-3.3	**0.00**	110	-3.3	**0.00**	110	-3.3	**0.00**
3	100.08	-12.78	100.08	-12.8	**0.00**	100.08	-12.8	**0.00**	100.08	-12.8	**0.00**
4	92.98	-9.84	92.97	-9.8	**0.01**	92.97	-9.8	**0.01**	92.97	-9.8	**0.01**
5	91.98	-12.33	91.98	-12.3	**0.00**	91.98	-12.3	**0.00**	91.98	-12.3	**0.00**
6	91.92	-12.3	91.92	-12.2	**0.00**	91.92	-12.2	**0.00**	91.92	-12.2	**0.00**

Arc Flash/ Short Circuit Analysis extra slides

- 15 years of development for all arc flash analysis in Etap
- AC/DC Arc flash analysis
- IEEE 1584 Method
- Ralph Lee Method
- Doughty Method
- Doan Method

Table D.1 Limitation of Calculation Methods

Section	Source	Limitations/Parameters
D.2	Lee, "The Other Electrical Hazard: Electrical Arc Flash Burns"	Calculates incident energy and arc flash boundary for arc in open air; conservative over 600 V and becomes more conservative as voltage increases
D.3	Doughty, et al., "Predicting Incident Energy to Better Manage the Electrical Arc Hazard on 600 V Power Distribution Systems"	Calculates incident energy for three-phase arc on systems rated 600 V and below; applies to short-circuit currents between 16 kA and 50 kA
D.4	IEEE 1584, *Guide for Performing Arc Flash Calculations*	Calculates incident energy and arc flash boundary for: 208 V to 15 kV; three-phase; 50 Hz to 60 Hz; 700 A to 106,000 A short-circuit current; and 13 mm to 152 mm conductor gaps
D.5	Doan, "Arc Flash Calculations for Exposure to DC Systems"	Calculates incident energy for dc systems rated up to 1000 V dc