Accelerators for a Higgs Factory

Stuart Henderson
November 13, 2012

Thanks to Mark Palmer, Tanaji Sen, Nick Walker, David Neuffer

U.S. DEPARTMENT OF ENERGY

Fermilab

Higgs Factories

Linear Colliders

ILC
CLIC
SLC-type
Adv. Concepts

Circular e^+e^- Colliders

LEP3
TLEP
Super-Tristan
FNAL Site-filler
IHEP, + …

SAPPHIRE, CLICHÉ, + …

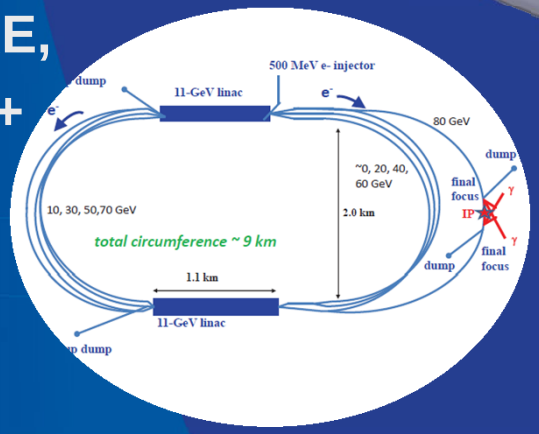

γ-γ Colliders

Muon Colliders

Fermilab

Luminosity Requirements

- Electron-positron collider
  - Produce Higgs in associated production above *ZH* threshold
  - e+e- collisions near E_{cm} = 240 GeV, σ ~ 200 fb
  - $\mathcal{L} = 10^{34}$ gives 100fb^{-1}/yr = 20,000 events per year per IP.
- Muon collider
  - s-channel Higgs production: $\mu^+\mu^- \to H$
  - σ ~40pb
  - Need $\mathcal{L} = 5\text{x}10^{31}$ for 20,000 *H*/year

An Old Topic!

LETTERE ALLA REDAZIONE

(La responsabilità scientifica degli scritti inseriti in questa rubrica è completamente lasciata dalla Direzione del periodico ai singoli autori)

A Possible Apparatus for Electron Clashing-Beam Experiments (*).

M. TIGNER

Laboratory of Nuclear Studies, Cornell University - Ithaca, N. Y.

(ricevuto il 2 Febbraio 1965)

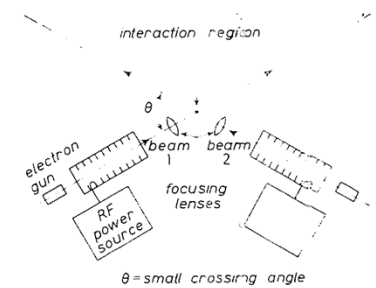

Fig. 1.

NUCLEAR INSTRUMENTS AND METHODS 136 (1976) 47–60; © NORTH-HOLLAND PUBLISHING CO.

VERY HIGH ENERGY ELECTRON–POSITRON COLLIDING BEAMS FOR THE STUDY OF WEAK INTERACTIONS

B. RICHTER

CERN, Geneva, Switzerland and Stanford Linear Accelerator Center, Stanford, Calif. 94305, U.S.A.

Received 2 April 1976

We consider the design of very high energy electron–positron colliding-beam storage rings for use primarily as a tool for investigating the weak interactions. These devices appear to be a very powerful tool for determining the properties of these interactions. Experimental possibilities are described, a cost minimization technique is developed, and a model machine is designed to operate at centre-of-mass energies of up to 200 GeV. Costs are discussed, and problems delineated that must be solved before such a machine can be finally designed.

Fermilab

Livingston Chart for e^+e^- Colliders

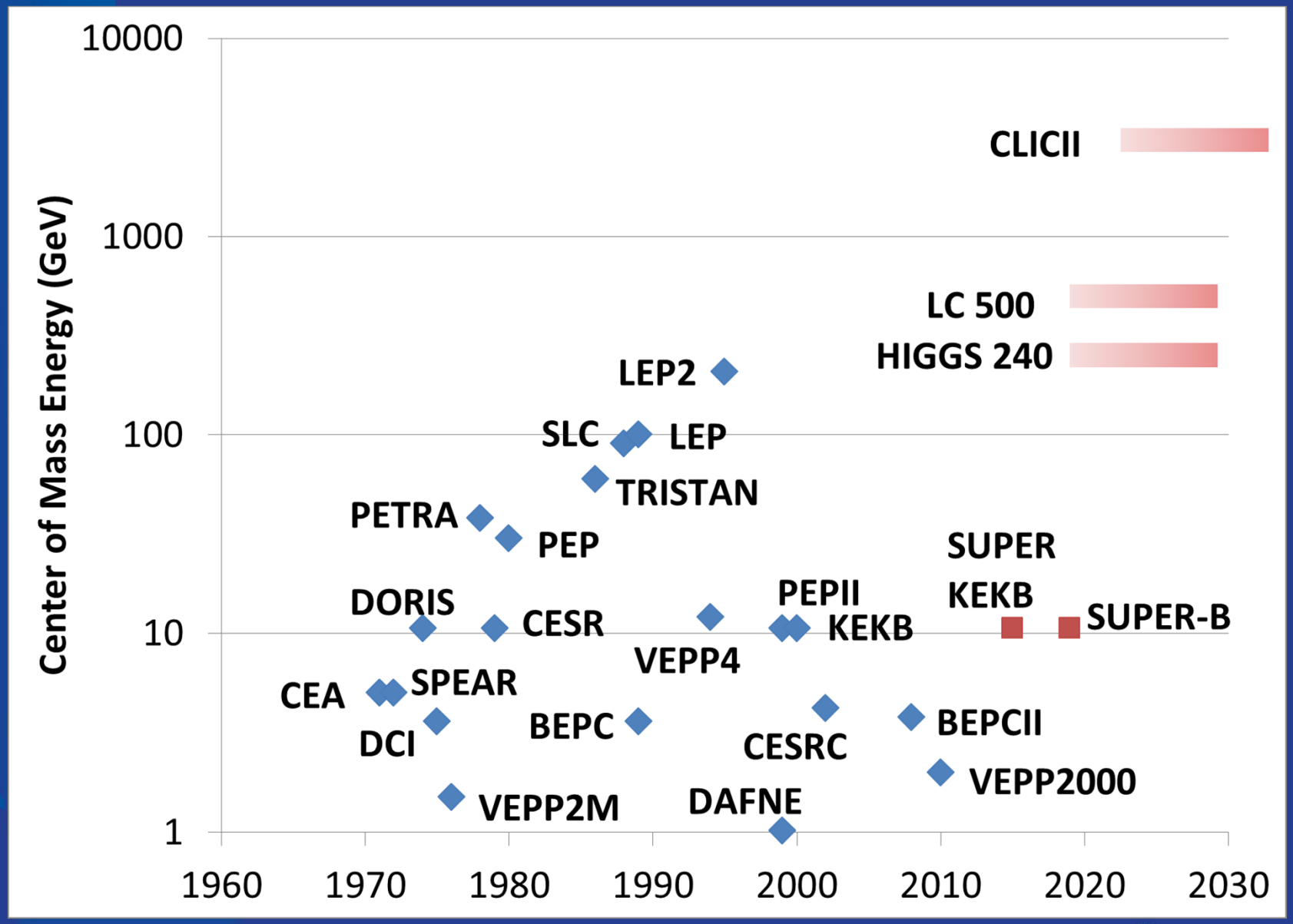

Livingston Chart: Luminosity

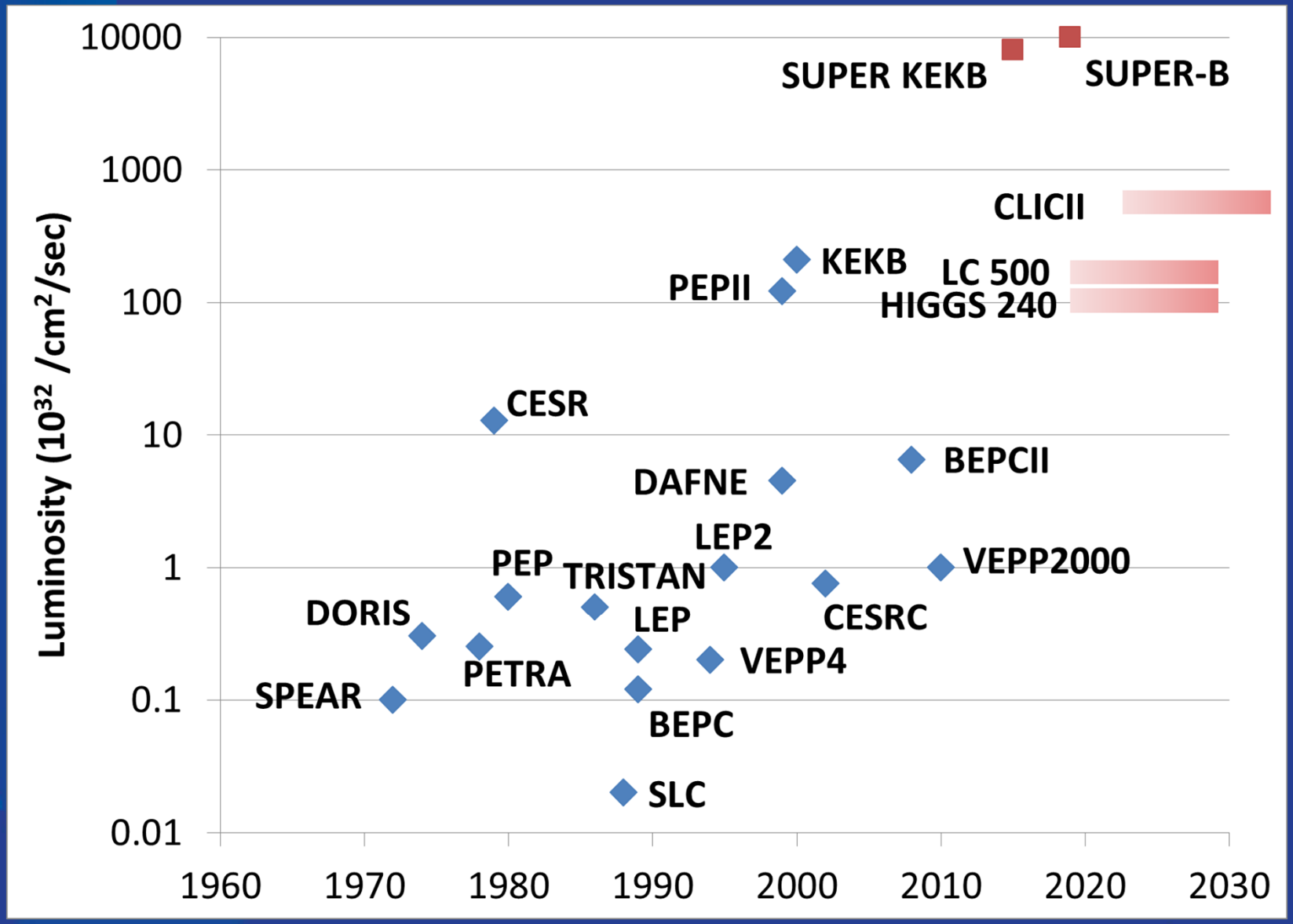

Circular Colliders: Luminosity

$$\mathcal{L} = \frac{N^2 f_c}{4\pi\sigma_x\sigma_y}$$

Number of particles

Collision frequency

Beam sizes at collision point

Beam Current

Ratio of V/H beamsizes

Beam-beam tuneshift parameter

$$\mathcal{L} \approx \frac{EI(1+r)\xi_y}{\beta_y^*} F(\beta_y, \sigma_z)$$

Vertical beta-function at IP

Hourglass luminosity reduction factor if bunch length > beta*

Fermilab

Circular Colliders at Very High Energy

- For a high energy collider, main constraint is set by synchrotron radiation power, which must be replenished by the RF system, which in turn establishes power consumption
- Energy loss per turn:

$$\Delta E[\mathrm{GeV}] = 8.85x10^{-5}\frac{E^4[GeV^4]}{\rho[m]}$$

- Example: 120 GeV e+e- collider in LEP tunnel has 7 GeV loss per turn (6% of beam energy!) compared to
  - 2.7 GeV for LEP2 and
  - 0.004 GeV for KEK-B

Circular Collider Concepts

- Reuse a tunnel:
  - Use LEP tunnel to build LEP3, which coexists with LHC (27 km)
- Constrained to fit on a Site:
  - Fermilab Site Filler (16 km)
- "Green-field" Concepts
  - DLEP (53 km), TLEP (80 km)
  - Super-Tristan (40, 60 km)
  - IHEP
  - Very Large Lepton Collider (233 km in VLHC tunnel)
  - …and others….

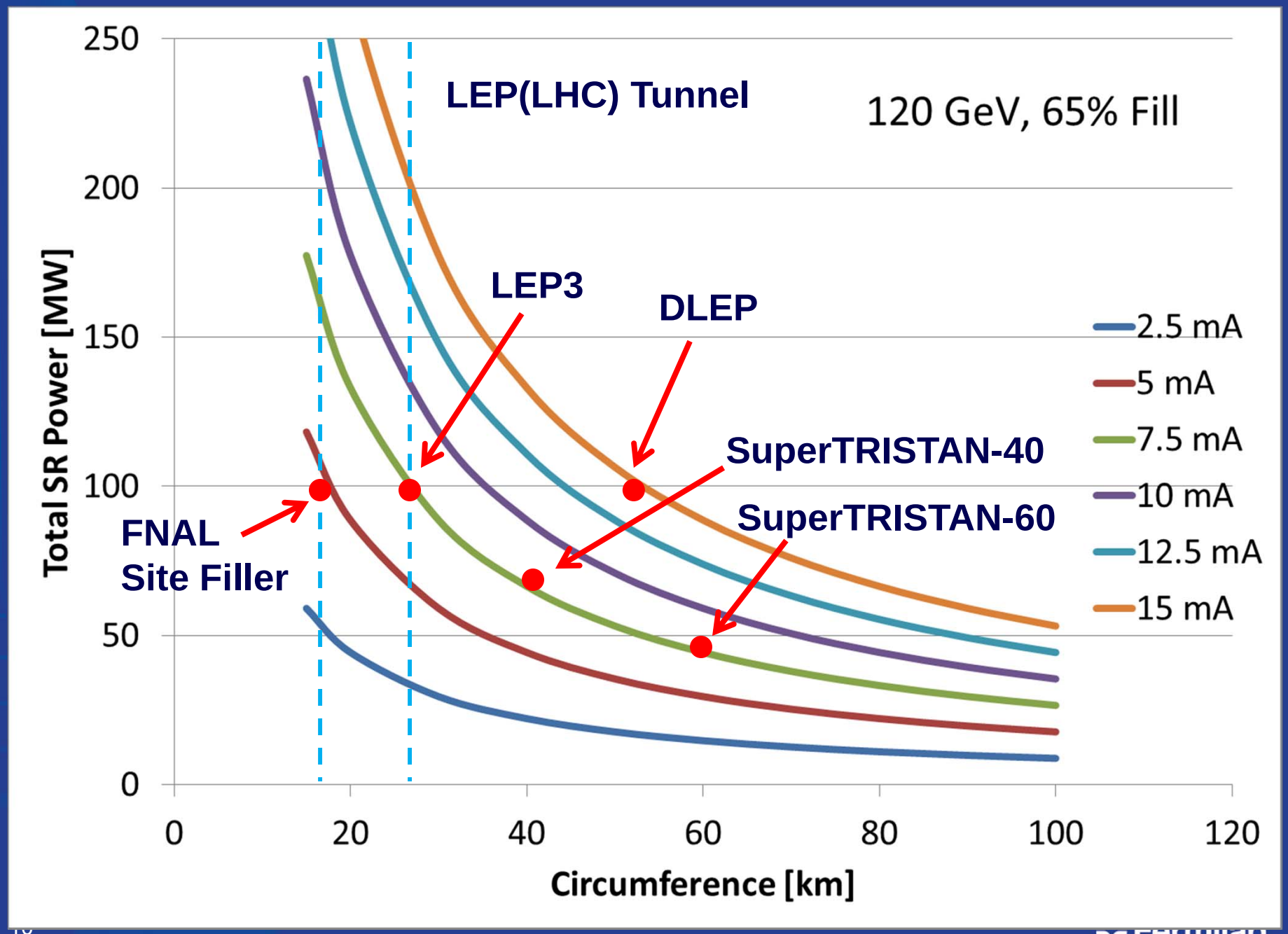
LEP(LHC) Tunnel
120 GeV, 65% Fill
LEP3
DLEP
SuperTRISTAN-40
SuperTRISTAN-60
FNAL
Site Filler
2.5 mA
5 mA
7.5 mA
10 mA
12.5 mA
15 mA
Total SR Power [MW]
Circumference [km]
250
200
150
100
50
0
0
20
40
60
80
100
120

Circular Collider Parameters (not exhaustive!)

	KEK-B	LEP2	LEP3	FNAL Site Filler	SuperTRI STAN-60
Circum [km]	3	27	27	16	60
Energy [GeV]	8/3.5	105	120	120	120
Current/beam [mA]	~1700	4	7.2	4.8	8.6
bunches	1600	4	4	2	18
Beta*x/y [mm]	1200/6	1500/65	200/1	200/2	80/2.5
Emit x/y [nm]	18/0.1	48/0.25	25/0.1	23/0.1	25/0.1
Bunch length [mm]	6	3	3	3	3
Beam-beam tuneshift	0.09	0.065	0.08	0.095	0.15
SR loss/turn [GeV/turn]	0.004/ 0.002	2.75	7.0	10.5	2.15
RF Voltage [GV]	0.010/.005	3.6	12	11.8	3.3
Total SR Power [MW]	5.6/3.4	22	100	100	37
Luminosity/IP [10^34 /cm^2/sec]	2.1	0.013	1.0	0.52	1.0

Key Technical and Design Issues: Circular

- Beamstrahlung
  - energy loss from beamstrahlung will lead to poor lifetime unless momentum acceptance is large
  - Dynamic aperture
  - energy spread
- Beam lifetime and Top-off Injection
  - At high luminosity, radiative Bhabha scattering is large, leading to short beam lifetimes (16 mins for LEP3)
  - Topoff requires full-energy injector
- Achievable beam-beam tuneshift
  - Dependence of tuneshift limit on damping decrement observed at LEP (720 turns)/LEP2(60 turns): $\xi_y \approx \lambda^{0.4}$
- Vertical beta-star pushed to limits
  - Requires short bunches or crab-waist approach
- Very large radiated SR power, with high critical energy
  - Ex: LEP3 would have 3.7 kW/m, 1.5 MeV critical energy
  - Large, expensive CW SC RF system
- Lattice
  - Achievable emittance, IR Chromaticity, …

Linear Colliders

$$\mathcal{L} = \frac{N^2 f_c}{4\pi\sigma_x\sigma_y}$$

$$\mathcal{L} = \frac{P_b}{E_b}\left(\frac{N}{4\pi\sigma_x\sigma_y}\right)$$

- Strong E-M fields at the collision point have important consequences:
  - Luminosity enhancement due to reduction in beam-size, quantified by H_D (pinch, disruption)
  - Beamstrahlung emission: background and energy spread at collision

Linear Colliders: CLIC

- Two-beam technology
  - Normal conducting RF
  - 12 GHz, 100 MV/m
- Maximum energy 3 TeV CoM – Phase I at 0.5 TeV

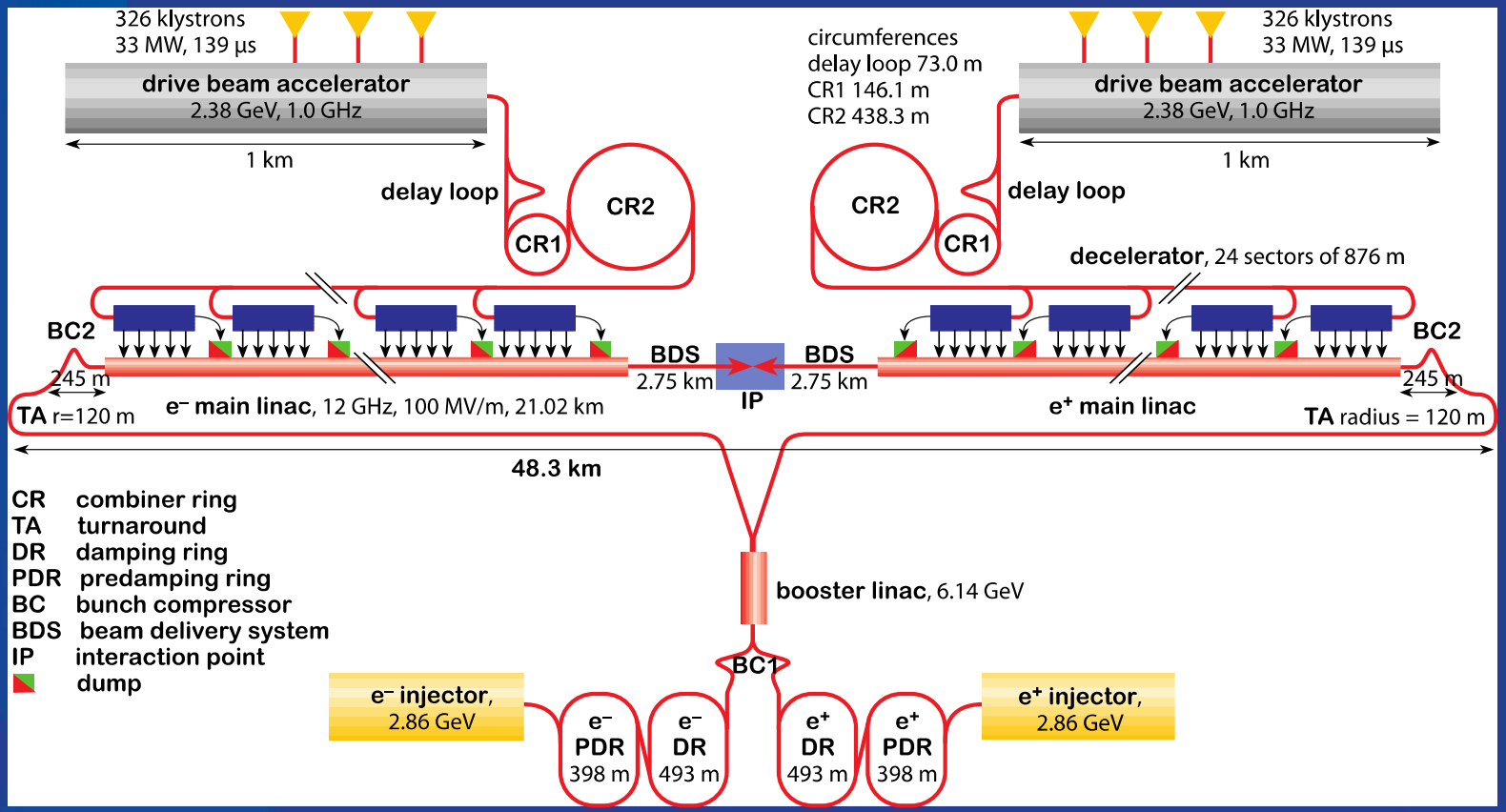

Linear Colliders: ILC

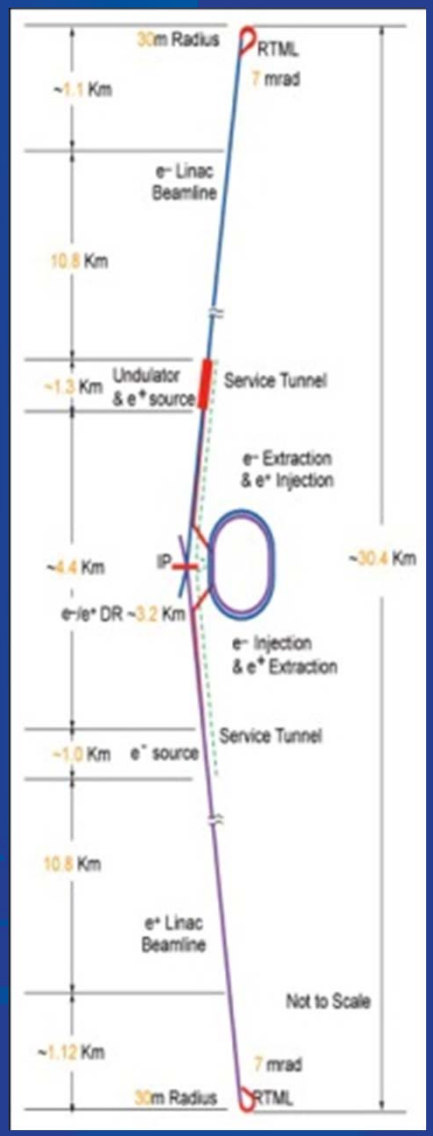

- Established SC RF technology (TESLA, XFEL…)
  - 1.3 GHz, 31.5 MV/m
- Initial phase at 0.5 TeV, maximum energy ~1 TeV CoM

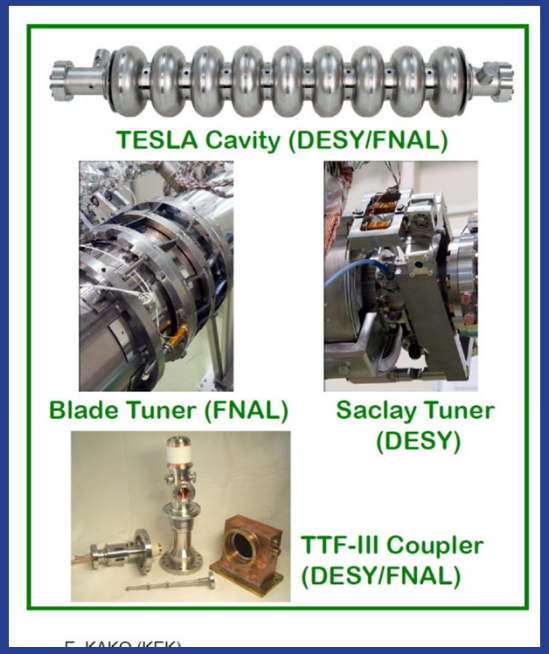

FNAL Advanced SC Test Accelerator

Linear Colliders as Higgs Factories

- ILC Staging Scenarios:
  - Full 500 GeV machine
  - 250 GeV CoM in 250 GeV tunnel
  - 250 GeV CoM in 500 GeV tunnel
  - Cost estimates are being assembled:
- 250 GeV Higgs Factory: ~70% TDR Cost, ~120 MW Power Consumption

Courtesy N. Walker

	500 GeV	250 GeV
Power per beam [MW]	5.3	2.6
Rep-rate [Hz]	5	5
Horiz beam size [nm]	474	729
Vert beam size [nm]	5.9	7.7
Lumi enhancement factor	2.0	1.8
Luminosity	1.8×10^{34}	0.75×10^{34}

"Turn-down" parameters for 250 GeV

Muon Collider Concept

- Some advantages make muon colliders attractive for Higgs as well as TeV, multi-TeV colliders
  - Higgs: s-channel production, can achieve narrow energy spread, measure mass and resonance width with precision
  - No SR: Muon collider is compact relative to e+e- colliders; can fit e.g. on the Fermilab site; cost-effective, reasonable power consumption
  - Other important factors:
    - Synergistic with developing a cutting-edge neutrino capability
    - Good match to existing and planned infrastructure for intensity frontier

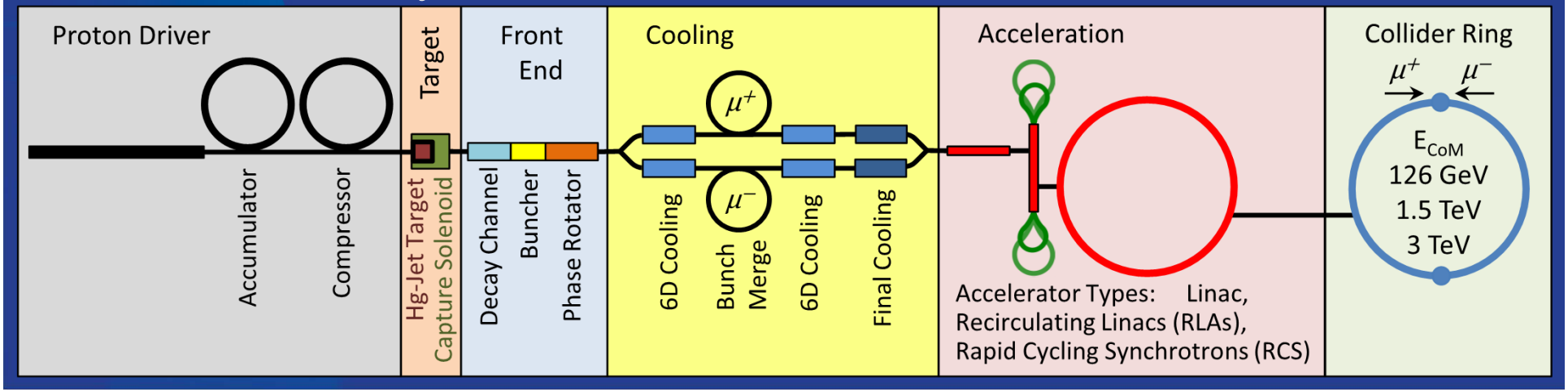

D.Neuffer
AAC12
NuFACT12

Higgs MC Parameters

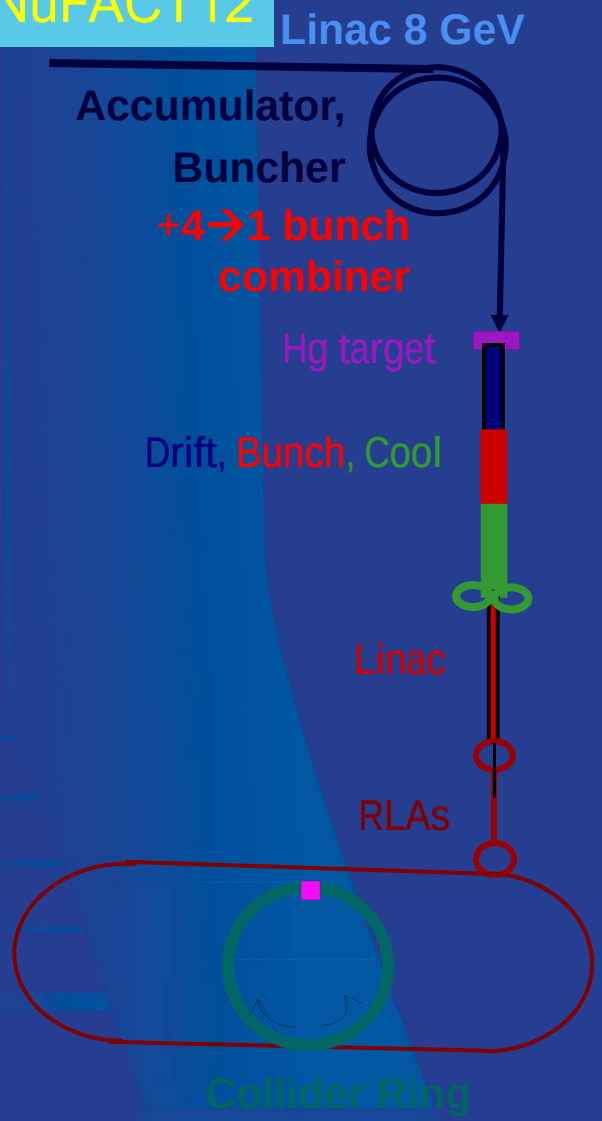

$\delta\gamma_{BB}$ =0.027

Achieves small momentum spread: dp/p = 4×10^{-5}

Parameter	Symbol	Value
Proton Beam Power	P_p	4 MW
Bunch frequency	F_p	15 Hz
Protons per bunch	N_p	$4\times5\times10^{13}$
Proton beam energy	E_p	8 GeV
Number of muon bunches	n_B	1
$\mu^{+/-}$/ bunch	N_μ	5×10^{12}
Transverse emittance	$\varepsilon_{t,N}$	0.0002m
Collision β^*	β^*	0.05m
Collision β_{max}	β^*	1000m
Beam size at collision	$\sigma_{x,y}$	0.02cm
Beam size (arcs)	$\sigma_{x,y}$	0.3cm
Beam size IR quad	σ_{max}	4cm
Collision Beam Energy	$E_{\mu+}, E_{\mu-}$	62.5(125GeV total)
Storage turns	N_t	1000
Luminosity	L_0	10^{32}

Fermilab

Key Technical Challenges

Many technical challenges to be overcome!

- Needs high-intensity proton driver (MW-class +)
- MW target system, pion to muon collection
- Needs muon cooling by large factors:
  - Cooling channel concepts
  - RF cavities in presence of magnetic fields, …
- Acceleration, collider ring, MDI and Detector, …

US Muon Accelerator Program (MAP) is pursuing a dedicated program to explore feasibility of MC technology in the timeframe of 6 years.

Gamma-Gamma Colliders

- High-power lasers are Compton backscattered from electron beams arranged as an e-e- or e+e- collider
- Equivalent e-e luminosity 1-2x10^{34}
- $\gamma\gamma \rightarrow H$ cross-section ~200fb
- Advantages:
  - Lower electron energy is needed (~80 GeV/beam)
  - Positrons are not required
- Concept is applicable to ILC/CLIC

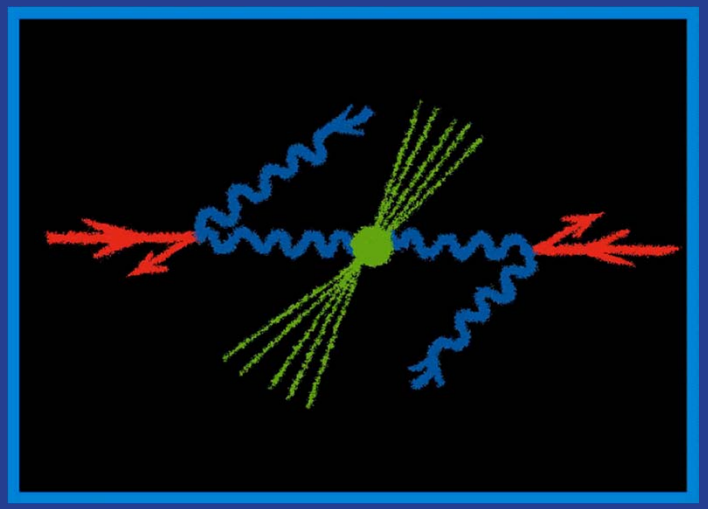

See, e.g., "SAPPHiRE, a small gamma-gamma Higgs factory," S.A. Bogacz et. al., http://arxiv.org/abs/1208.2827

Gamma-Gamma Collider Concepts

- SAPPHiRE: ERL based gamma-gamma based on LHeC ERL concept
- Laser parameters are aggressive; requires optical cavity schemes

CLICHÉ: CLIC Higgs Experiment

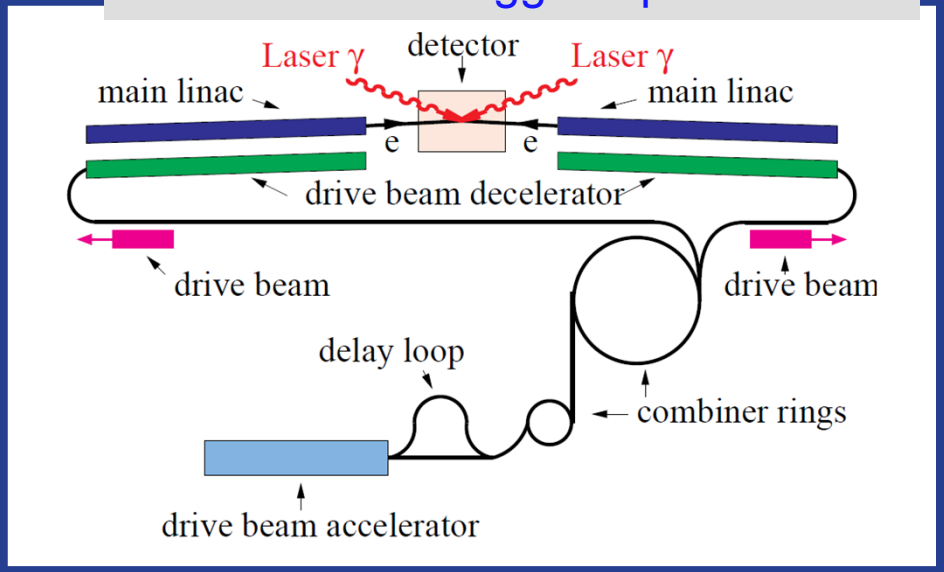

	SAPPHiRE
Beam Energy	80 GeV
Power Consumption	100 MW
Polarization	80%
Ave Beam Current	0.32 mA
E-e- geometric luminosity	2.2x10^34
Laser wavelength	351 nm
Repetition rate	200 kHz
Laser pulse energy	~5 J

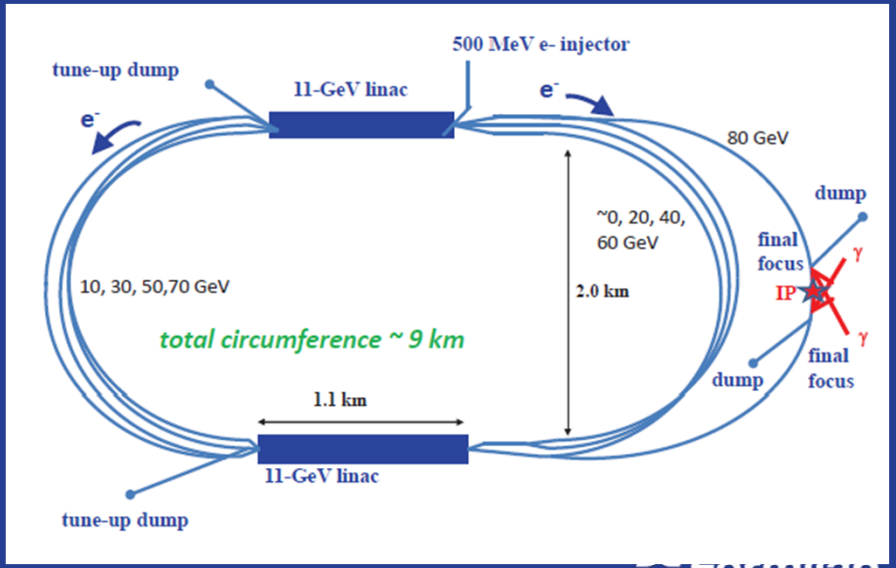

Higgs Factory Accelerator Pros and Cons (My Opinion)

	Linear Collider	Circular Collider	Muon Collider	G-G Collider
Technical Maturity	☺	☺☺	☹	☹
Size	☹	☹	☺	☺*
Cost	☹	😐	😐	☺*
Power Consumption	😐	☹	😐	😐
Energy Resolution	☹	☹	☺	☹
MDI	😐	😐	☹	☹
TeV Upgradability (Energy)	☺	☹☹	☺☺	☺
TeV Upgradability (Cost, Size, Power)	😐	☹☹	☺	😐

What Does a Higgs Factory Cost?

What do you get for a Billion Dollars?

NSLS-II: $0.9B, 0.8 km storage ring

SNS: $1.4B, 1 GeV Linac, Ring, high-power target, 1km

Assessment and Conclusions

- While many have focused for the last decade(s) on TeV (or multi-TeV) colliders, we should not think of a ~250 GeV e+e- collider as either “easy” or “cheap”.
  - Such a machine is extremely challenging and not inexpensive.
- It will be very difficult to upgrade the energy in a circular collider, unless the upfront cost of a large tunnel is included
- A Higgs Factory could be built in the near-term based on either Linear or Circular collider approaches
  - Muon collider and gamma-gamma require continued effort to establish feasibility.
  - In a longer time-frame, MC has many advantages, including size, energy reach, wall-power, …