The International Axion Observatory (IAXO)

Intensity Frontier Workshop

25 April 2013

Julia K. Vogel (LLNL)

On behalf of the IAXO collaboration

Lawrence Livermore National Laboratory

LLNL-PRES-566177

This work was performed under the auspices of the U.S. Department of Energy by Lawrence Livermore National Laboratory under Contract DE-AC52-07NA27344. Lawrence Livermore National Security, LLC

Overview

- Solar Axion Searches
- The International Axion Observatory (IAXO)
  - Magnet
  - X-ray optics for IAXO
  - Low-background detectors for IAXO
  - Prototype testing
- IAXO Prospects
  - Sensitivity prospects
  - Collaboration and schedule
- Conclusions

Journal of Cosmology and Astroparticle Physics
An IOP and SISSA journal

Towards a new generation axion helioscope

I.G. Irastorza,[a] F.T. Avignone,[b] S. Caspi,[c] J.M. Carmona,[a] T. Dafni,[a] M. Davenport,[d] A. Dudarev,[d] G. Fanourakis,[e] E. Ferrer-Ribas,[f] J. Galán,[a,f] J.A. García,[a] T. Geralis,[e] I. Giomataris,[f] H. Gómez,[a] D.H.H. Hoffmann,[g] F.J. Iguaz,[f] K. Jakovčić,[h] M. Krčmar,[h] B. Lakić,[h] G. Luzón,[a] M. Pivovaroff,[j] T. Papaevangelou,[f] G. Raffelt,[k] J. Redondo,[k] A. Rodríguez,[a] S. Russenschuck,[d] J. Ruz,[d] I. Shilon,[d,i] H. Ten Kate,[d] A. Tomás,[a] S. Troitsky,[l] K. van Bibber,[m] J.A. Villar,[a] J. Vogel,[j] L. Walckiers[d]

Irastorza et al. JCAP 06 (2011) 013

Solar axion searches

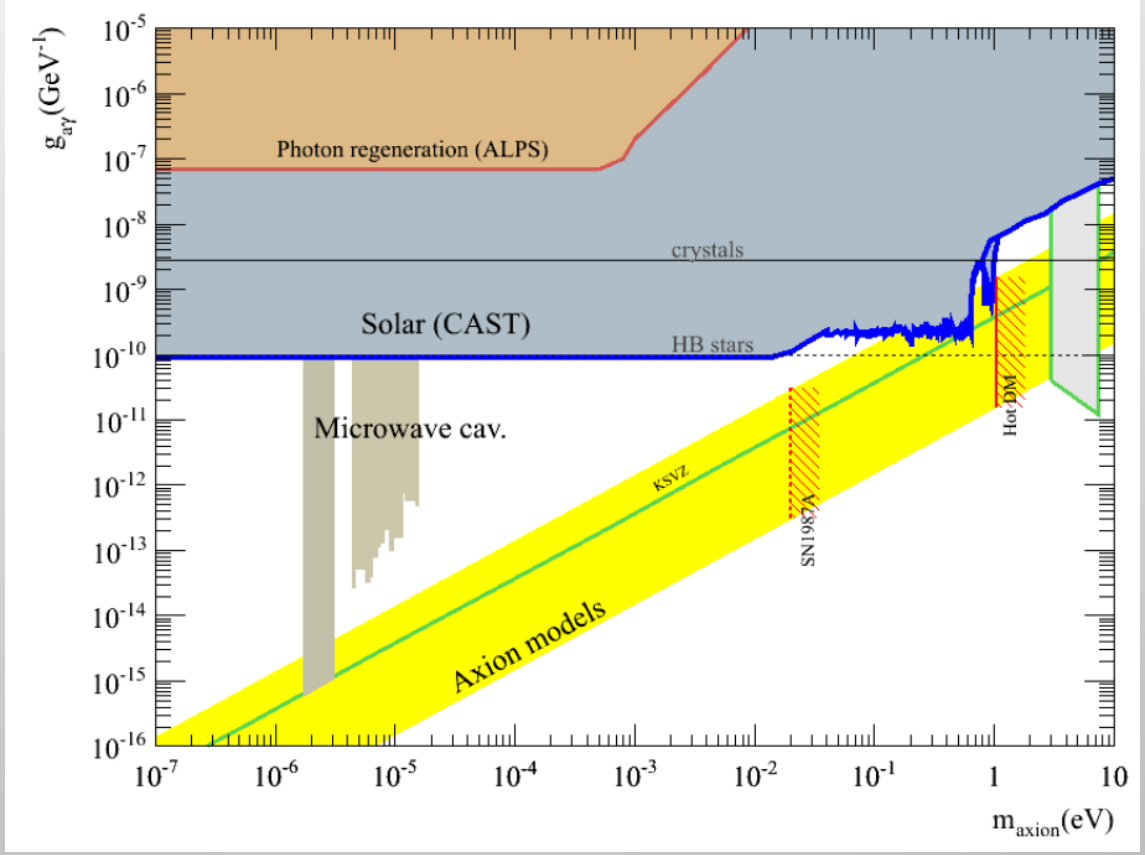

Solar axion searches

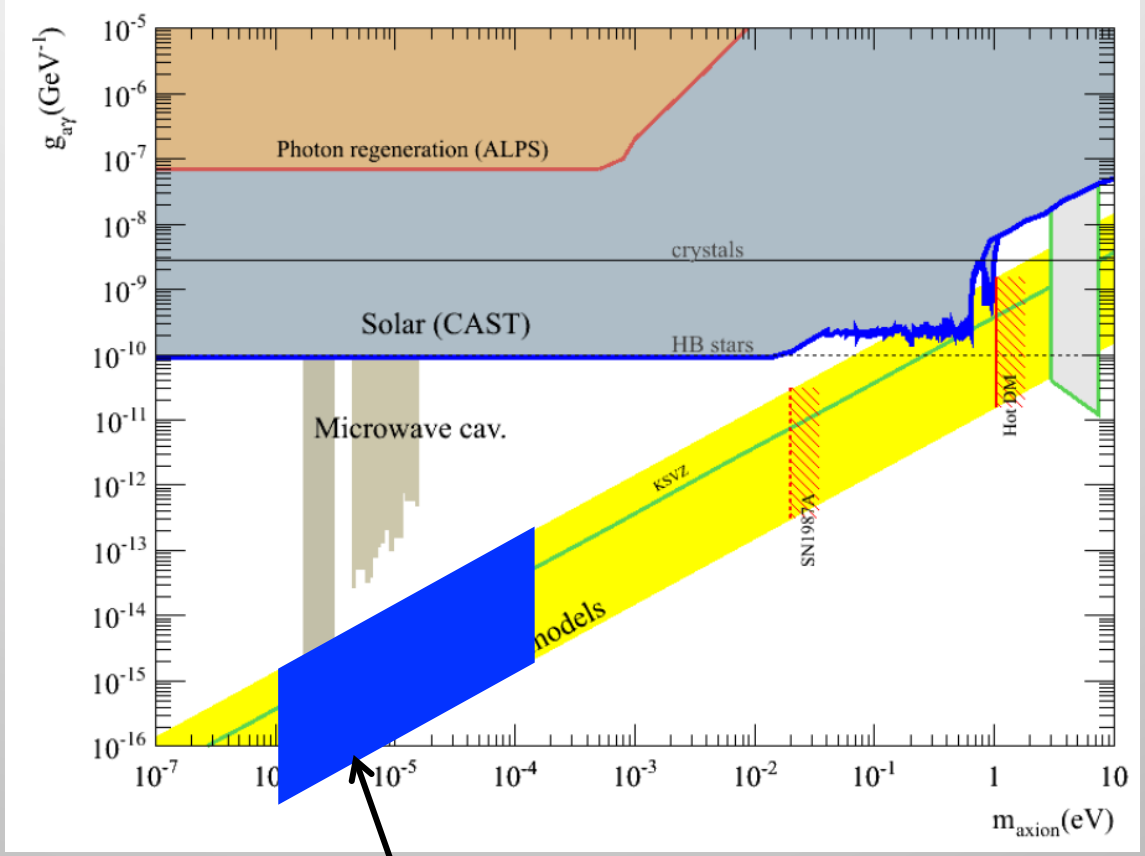

CDM
"classical window"
Vacuum mis. + defects

Solar axion searches

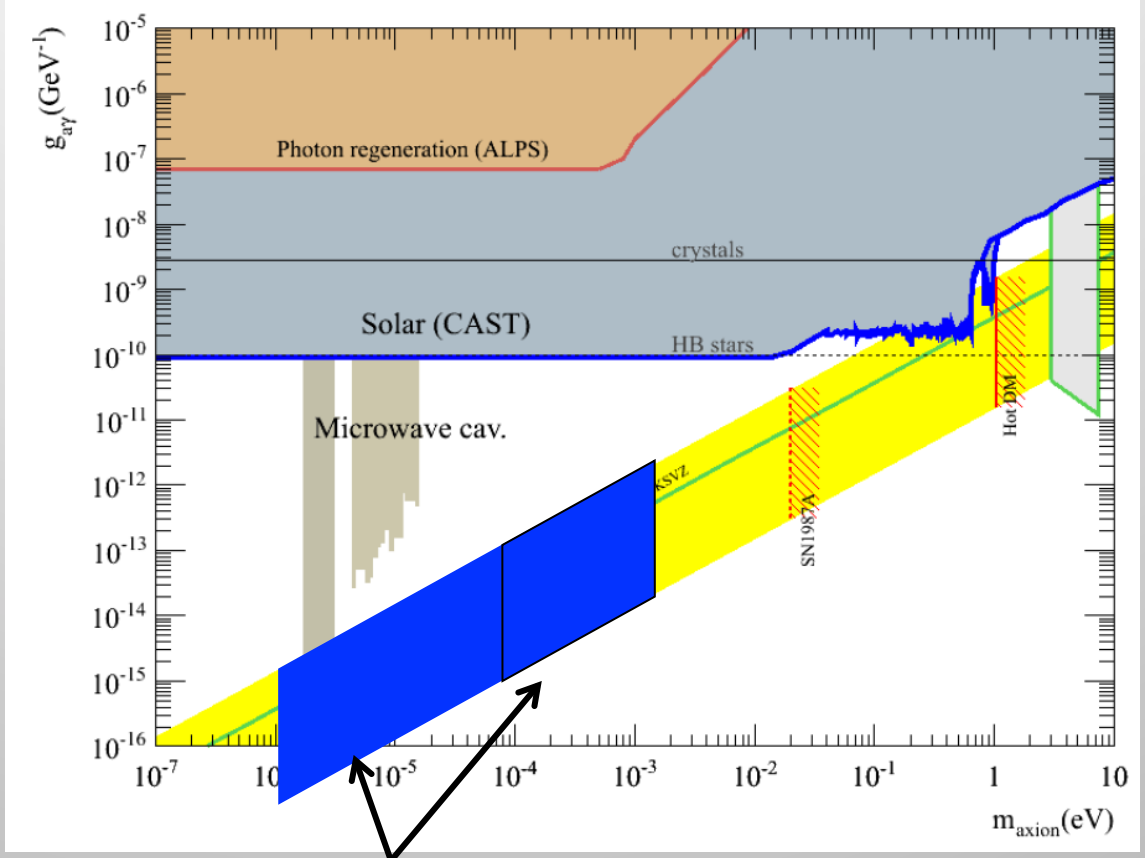

CDM
"classical window"
Vacuum mis. + defects

Solar axion searches

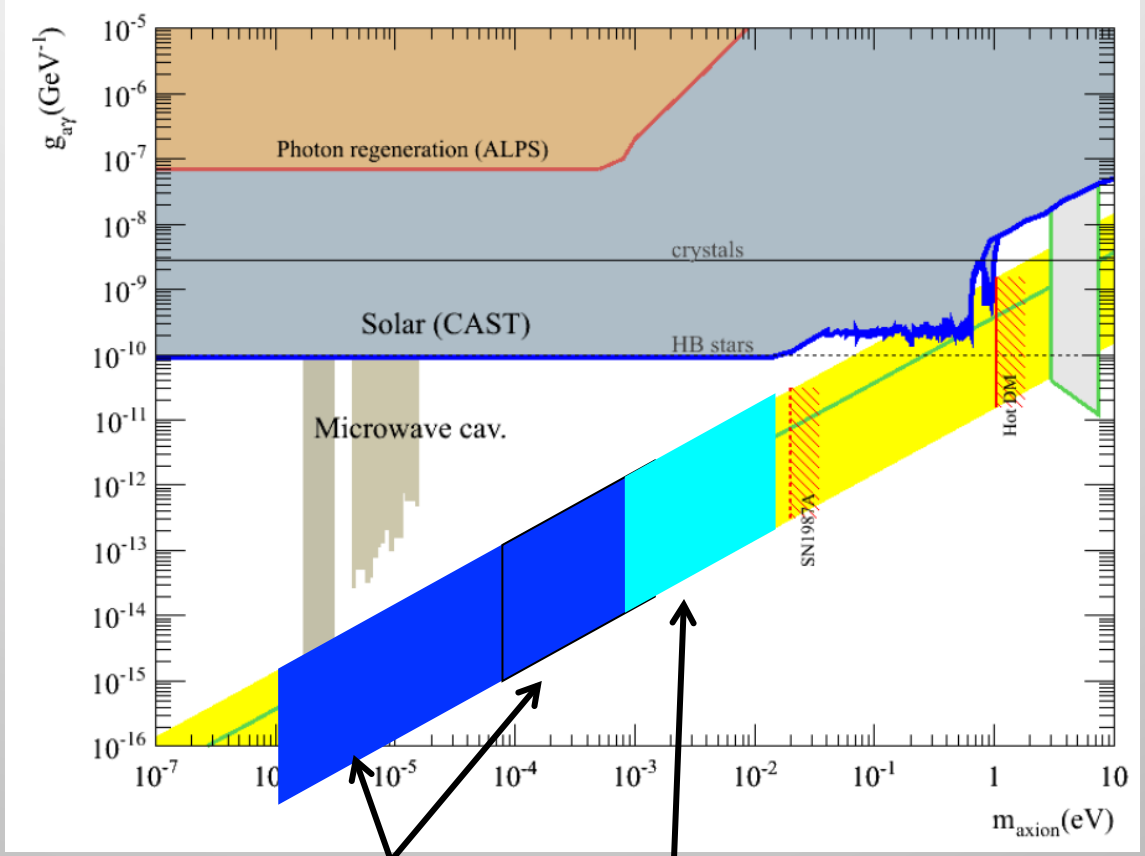

CDM
"classical window"
Vacuum mis. + defects

CDM
Defects dominate
hep-ph/1202-5851

Solar axion searches

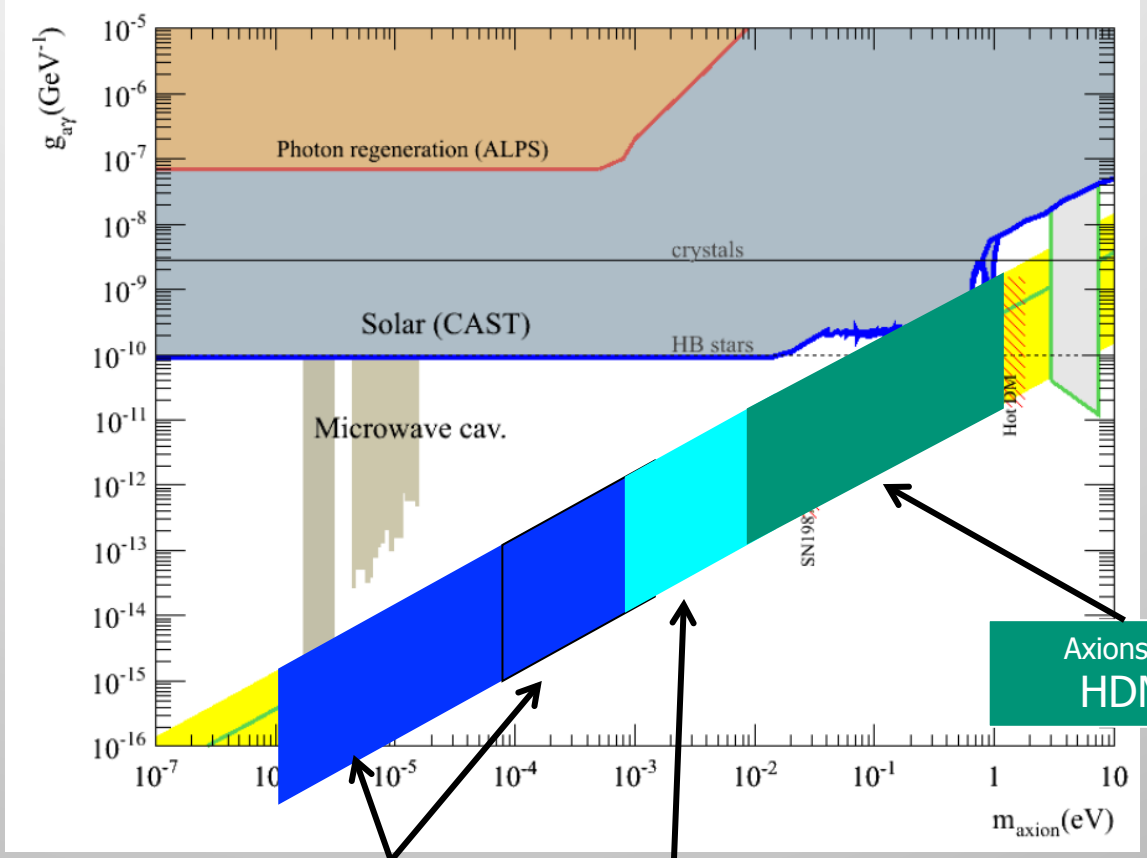

Axions as HDM

CDM
"classical window"
Vacuum mis. + defects

CDM
Defects dominate
hep-ph/1202-5851

Solar axion searches

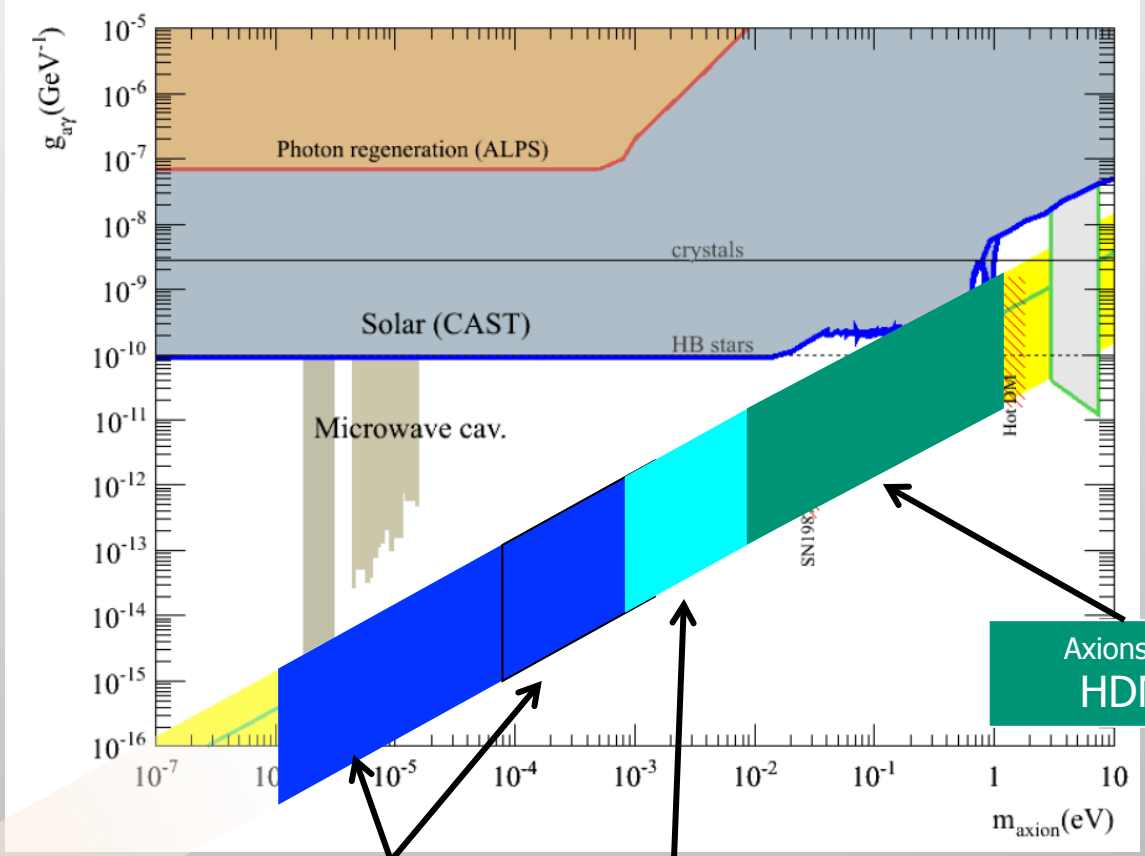

CDM
"anthropic window"

CDM
"classical window"
Vacuum mis. + defects

CDM
Defects dominate
hep-ph/1202-5851

Axions as
HDM

Solar axion searches

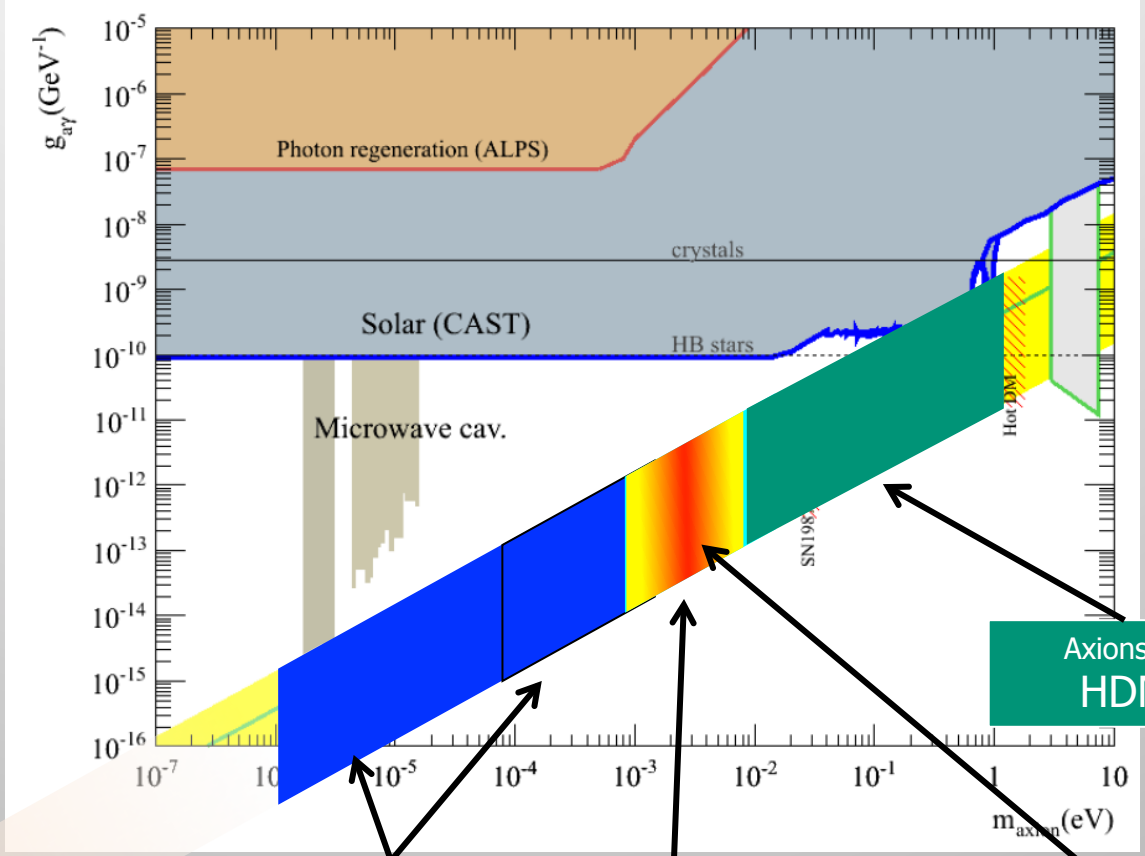

CDM
"anthropic window"

CDM
"classical window"
Vacuum mis. + defects

CDM
Defects dominate
hep-ph/1202-5851

White
Dwarfs

Axions as
HDM

Solar axion searches

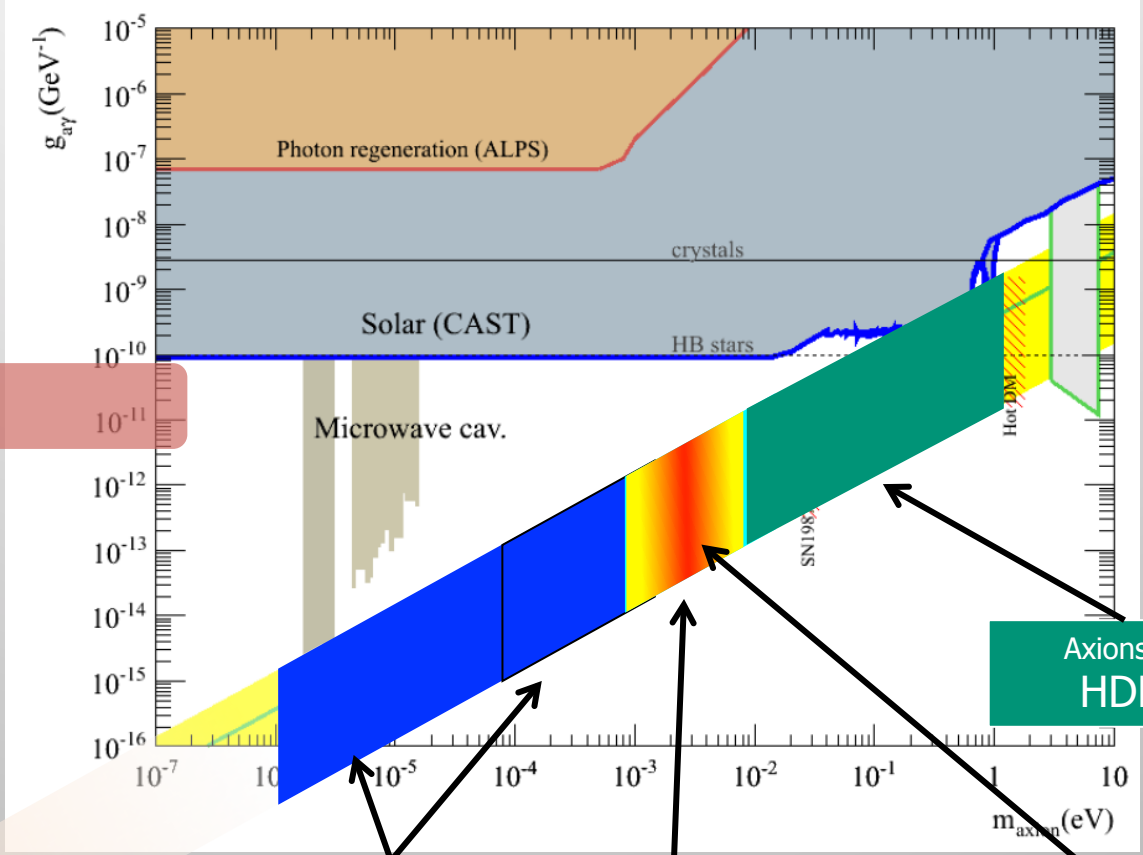

Astrophysical hints for ALPs

CDM
"anthropic window"

CDM
"classical window"
Vacuum mis. + defects

CDM
Defects dominate
hep-ph/1202-5851

White Dwarfs

Axions as HDM

IAXO – 4th generation helioscope

→ 1st generation: Brookhaven Experiment
→ 2nd generation: Tokyo Helioscope
→ 3rd generation: CAST

IAXO = 4th generation axion helioscope

- CAST is established as a reference result in experimental axion physics
- IAXO builds on CAST innovations to improve the helioscope technique…
  - Based on the more than a decade CAST experience
  - Technologies have high maturity [TRL ≥ 7] - no fundamental challenges or high-risk R&D required
- No other technique can realistically improve grasp over a wide mass range for γ–a coupling

Ingredients of a successful helioscope

Large & powerful magnet...

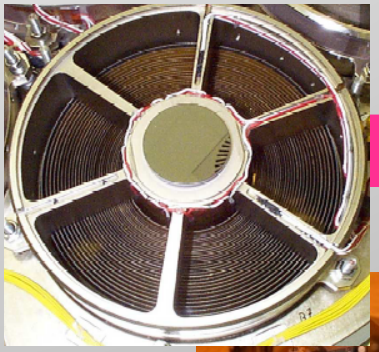

...X-ray optics,...

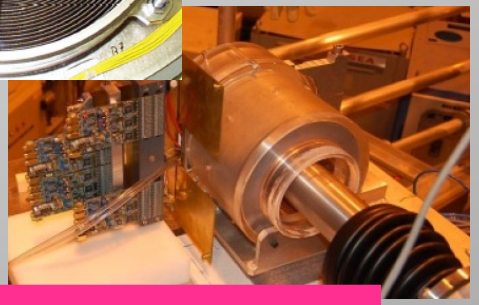

...and low background detectors

IAXO – How to improve sensitivity

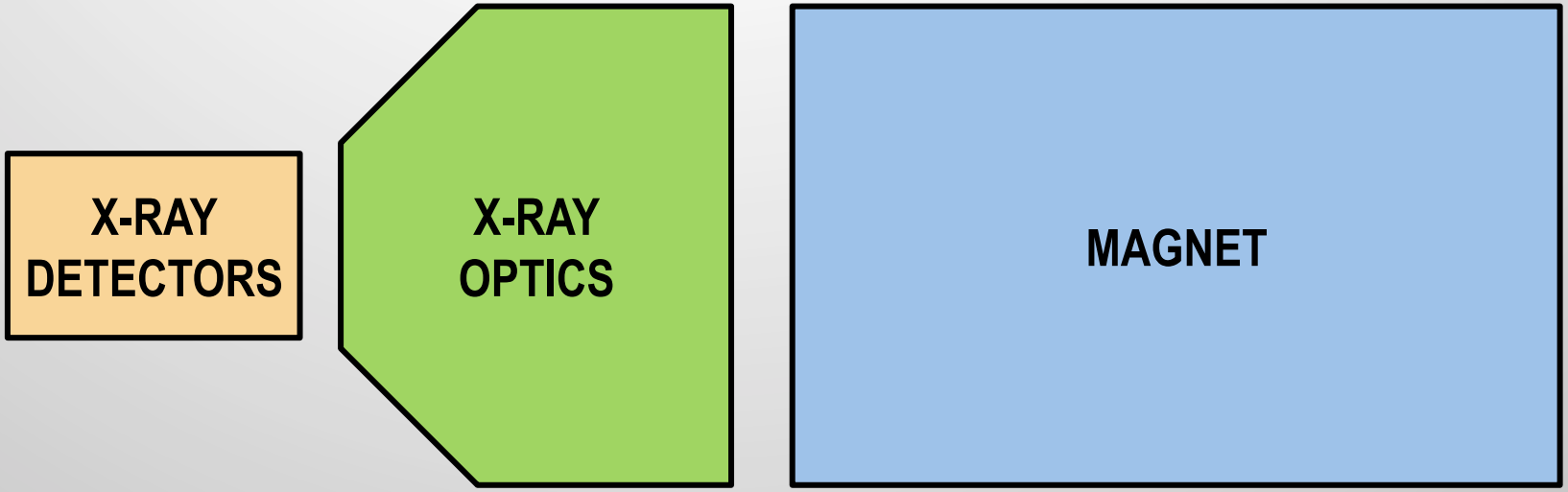

$$g_{a\gamma}^4 \propto \underbrace{b^{1/2}\varepsilon^{-1}}_{\textit{detectors}} \times \underbrace{s^{1/2}\varepsilon_0^{-1}}_{\textit{optics}} \times \underbrace{(BL)^{-2}A^{-1}}_{\textit{magnet}} \times \underbrace{t^{-1/2}}_{\textit{exposure}}$$

detectors

b = background
ε = efficiency

optics

s = spot size
ε_0= efficiency

magnet

B = magnetic field
L = magnet length
A = cross-sectional area

exposure

t = time

IAXO – How to improve sensitivity

Parameter	Unit	CAST-I	Scenario 1	Scenario 2	Scenario 3	Scenario 4
B	T	9	3	3	4	5
L	m	9.26	12	15	15	20
A	m^2	2×0.0015	1.7	2.6	2.6	4.0
f^*_M		1	100	260	450	1900
b	$\frac{10^{-5}\,c}{keV\,cm^2\,s}$	~ 4	3×10^{-2}	10^{-2}	3×10^{-3}	10^{-3}
ϵ_d		0.5–0.9	0.7	0.7	0.7	0.7
ϵ_o		0.3	0.3	0.3	0.6	0.6
a	cm^2	0.15	3	2	1	1
f^*_{DO}		1	6	14	40	40
ϵ_t		0.12	0.3	0.3	0.5	0.5
t	year	~ 1	3	3	3	3
f^*_T		1	2.7	2.7	3.5	3.5
f^*		1	1.6×10^3	9.8×10^3	6.3×10^4	2.7×10^5

Current design have IAXO with performance between Scenarios 3&4

IAXO – The new generation helioscope

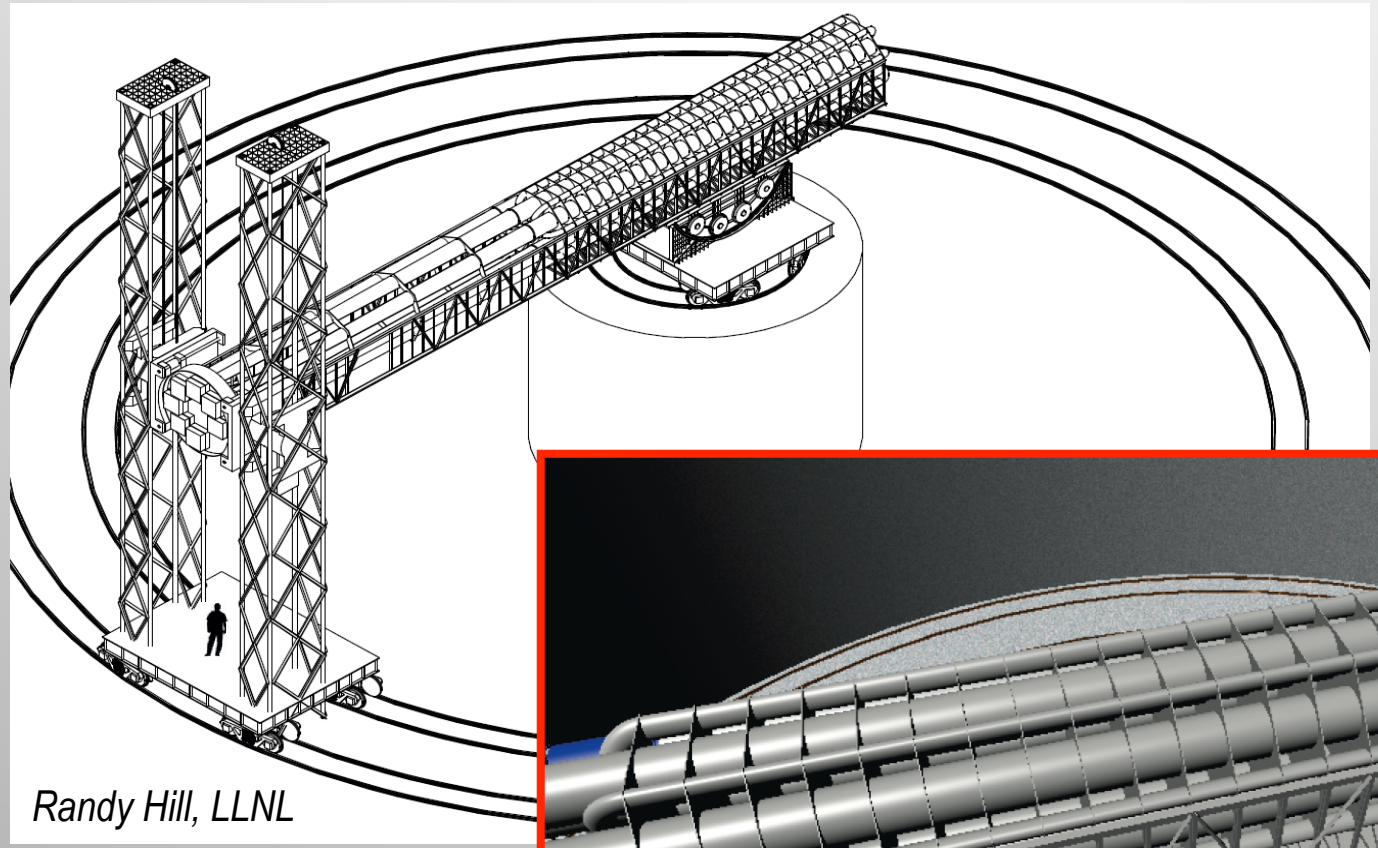

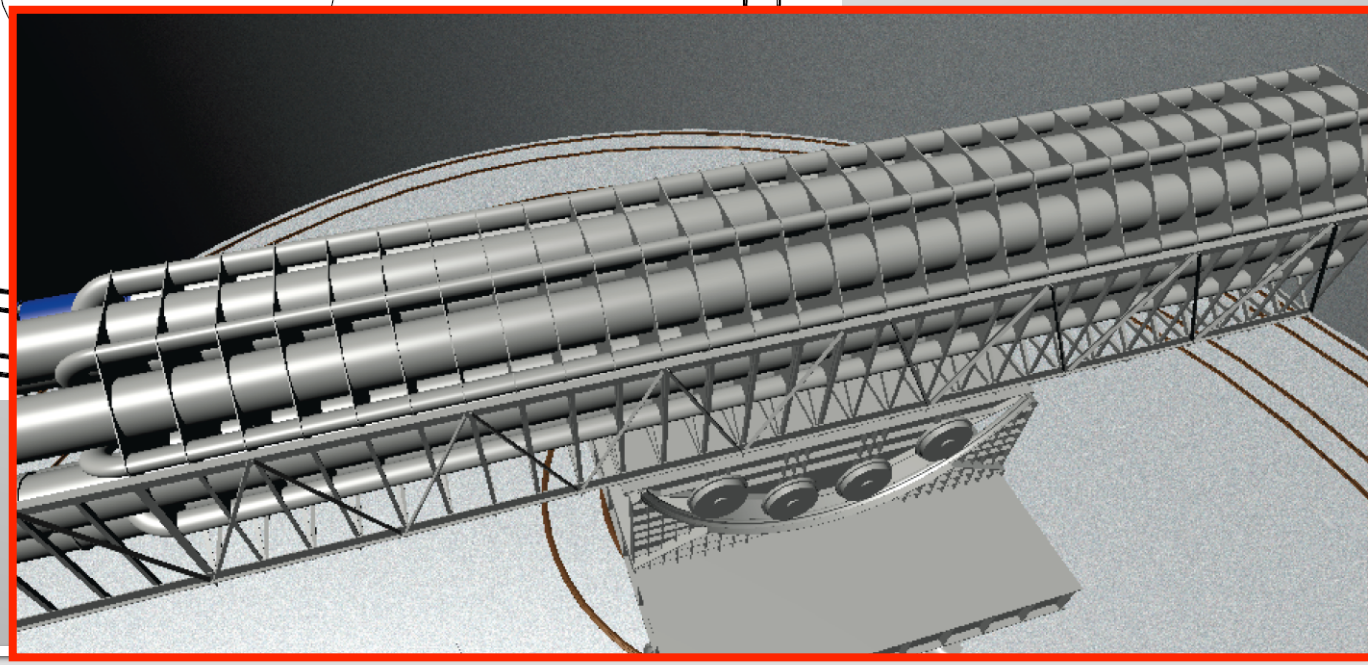

IAXO – The new generation helioscope

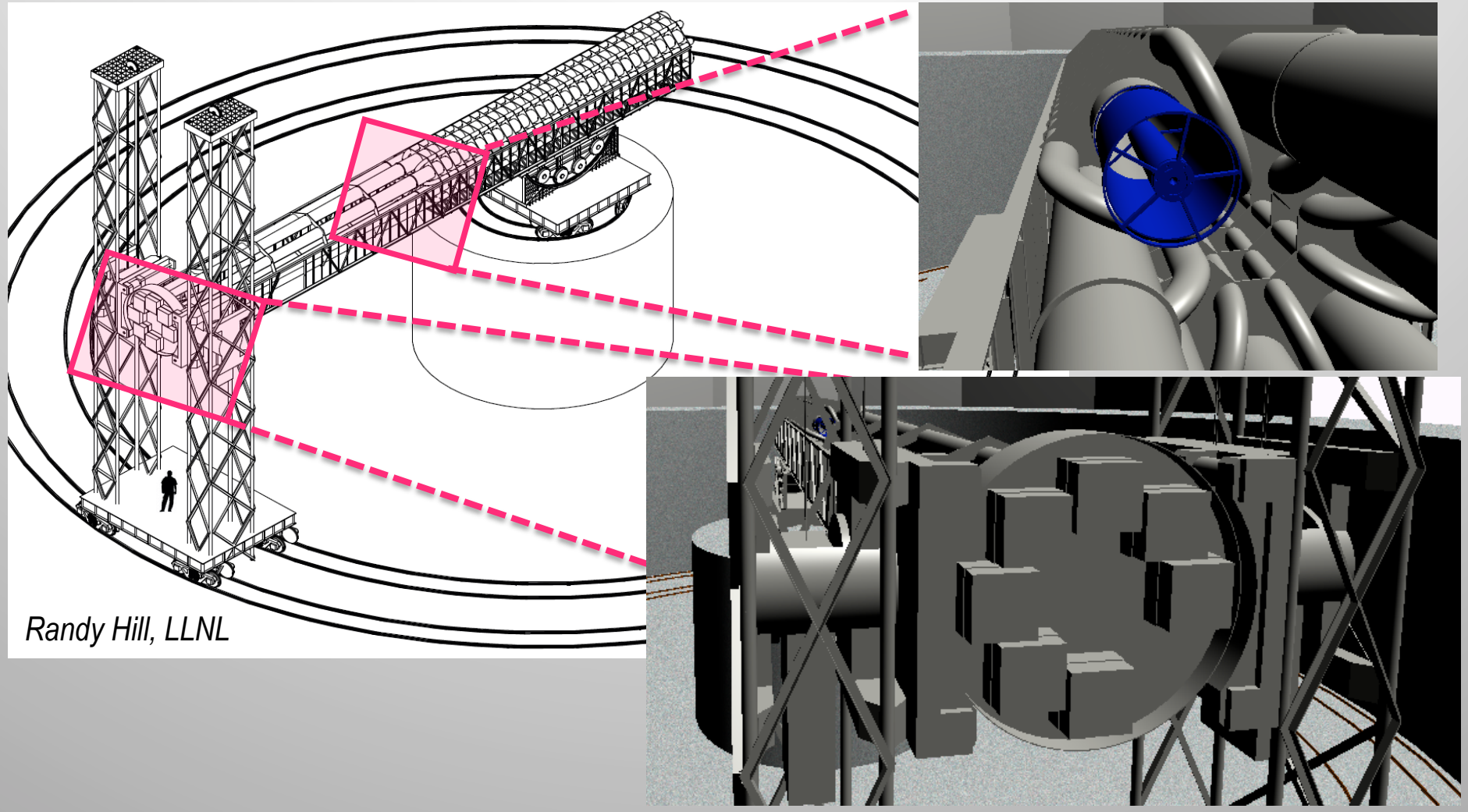

Magnet for IAXO

- CAST has pushed the limits of "recycling", by using one of the best existing magnets (LHC test magnet)
- Only way to markedly improve reach is to build a new magnet for axions
- Significant modeling and design work completed

- Optimal design is a toroidal configuration (similar to ATLAS):
  - Much bigger bores than CAST
    - 60 cm versus 14 cm
  - Relatively light (no iron yoke)
  - Bores at room temperature
- Incorporate operational principles of a detector magnet with the performance required for axion physics

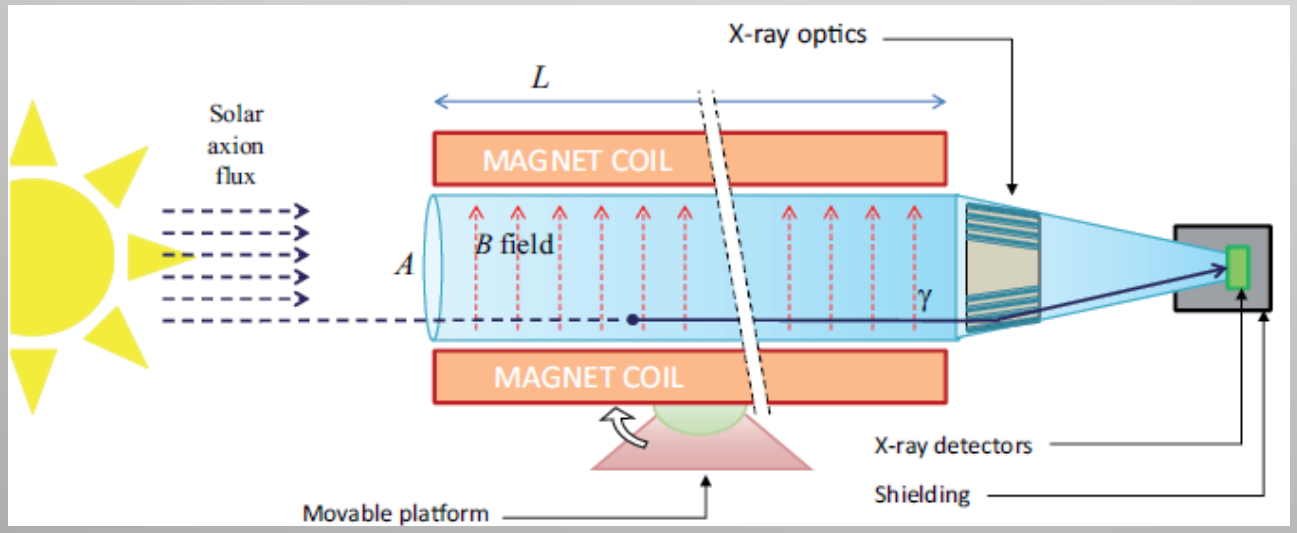

Total Radius	**= 2 m**
Bore diameter	**= 600 mm**
Number of bores	**= 8**
Peak field	**= 5.4 T**
Stored Energy	**= 500 MJ**
M_{FOM}	**≈ 300**

Shilon et al. arXiv:1212.4633v1
IEEE Trans Appl Supercond 23 (2013)

Magnet for IAXO

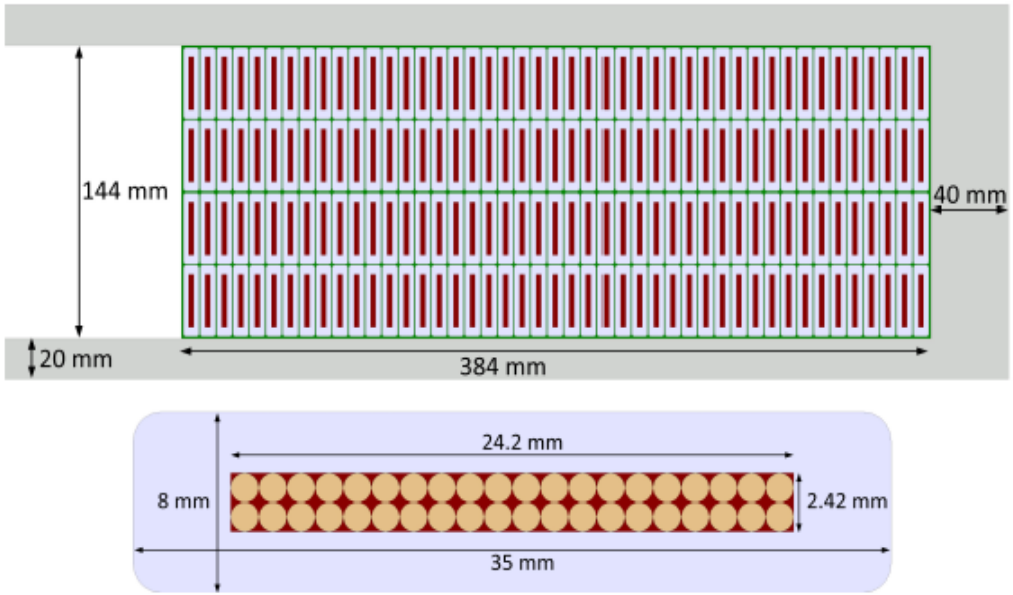

Fig. 4. Cross section of the conceptual design of the two double pancake winding pack and the coil casing (top) and the conductor with a 40 strands NbTi Rutherford cable embedded in a high purity Al stabilizer (bottom).

Shilon et al. arXiv:1212.4633v1
IEEE Trans Appl Superc 23 (2013)

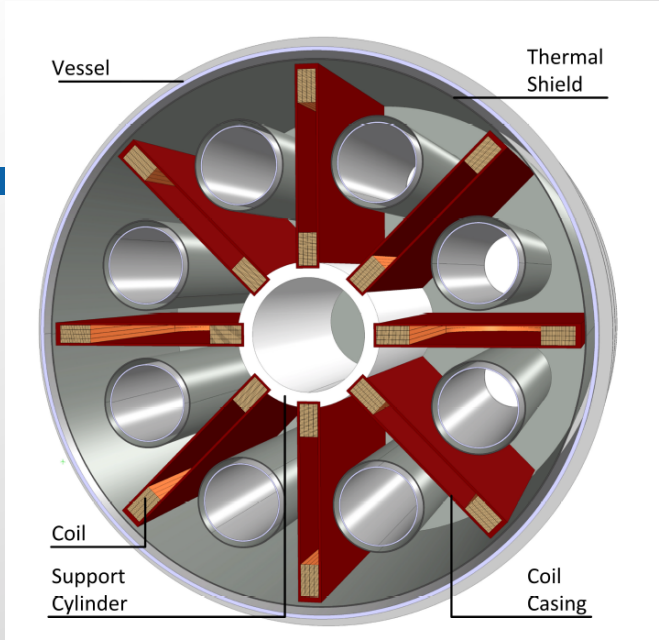

Plot of magnetic fields

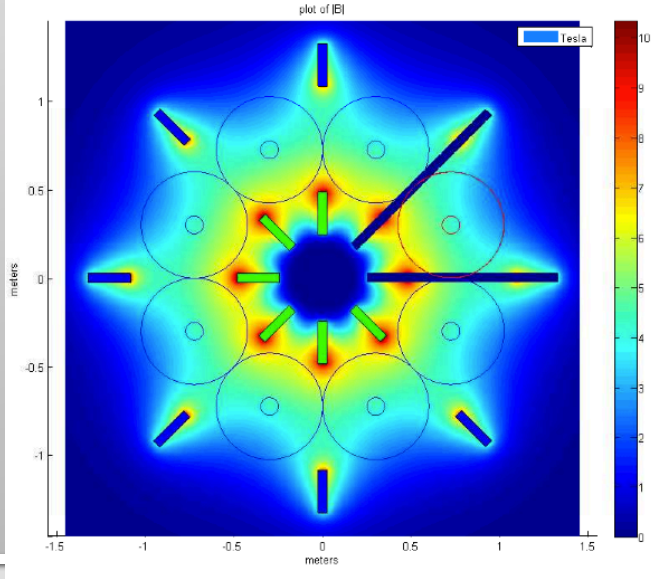

Conceptual design for magnet

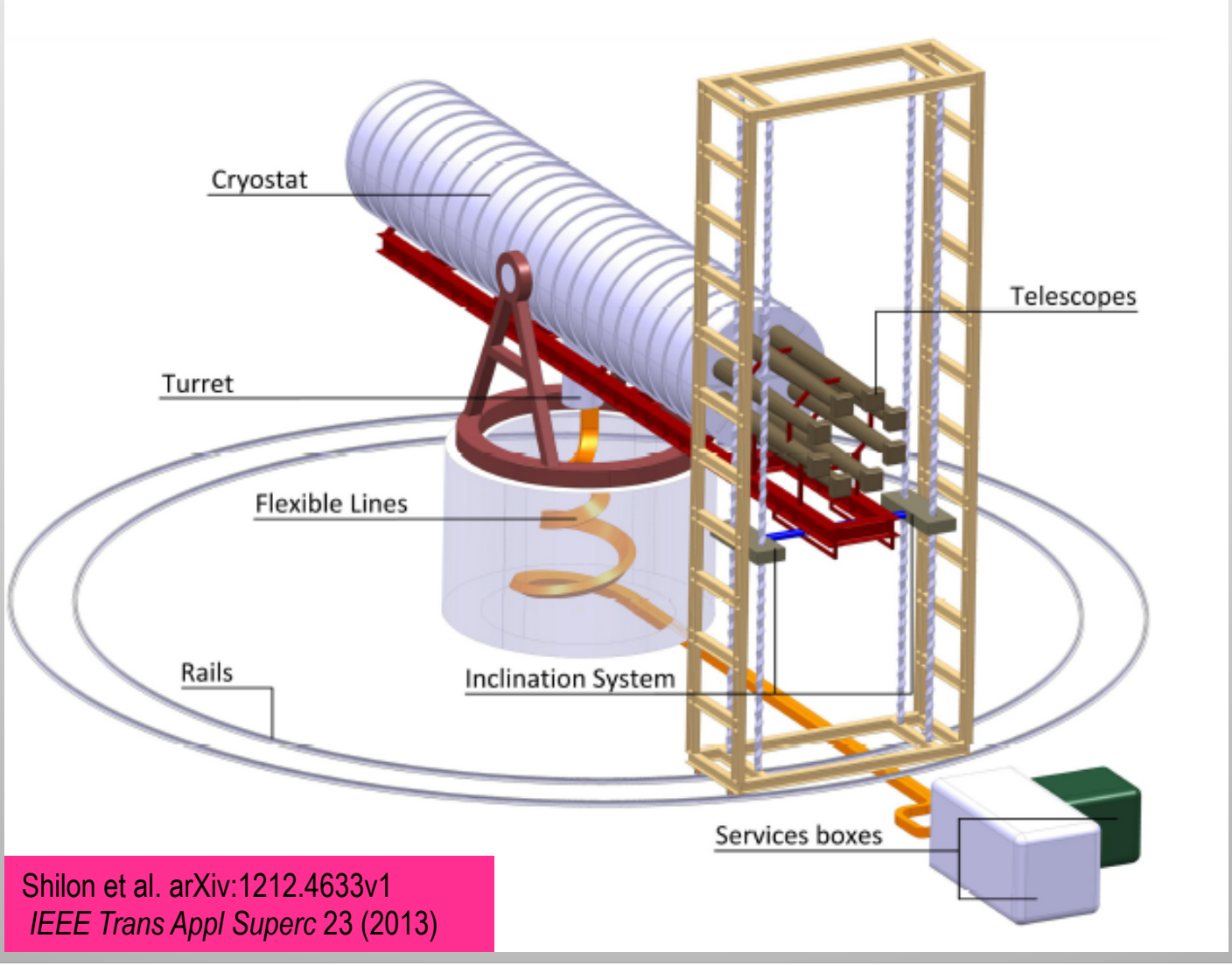

Shilon et al. arXiv:1212.4633v1
IEEE Trans Appl Superc 23 (2013)

X-ray optics

- X-ray astrophysics community has invested heavily in the development of reflective x-ray optics:
  - 40+ years of telescopes in space
  - Excellent imaging capabilities
- Innovations include:
  - Nested designs (*e.g.,*Wolter telescopes)
  - Low-cost substrates
  - Highly reflective coatings
- IAXO optics requirements:
  - Exquisite imaging not needed for solar studies
  - Optics aperture matched to magnet bore size
    → IAXO requires dedicated but cost-effective optics
  - Good throughput (30-50% integrated reflectivity)

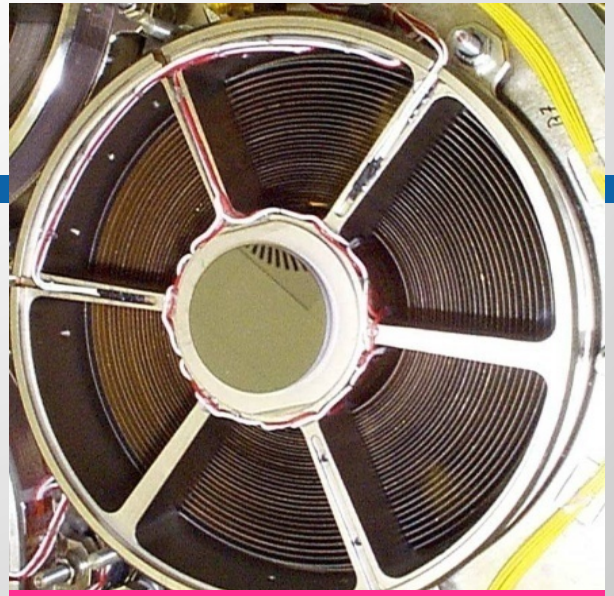

ABRIXAS flight-spare telescope

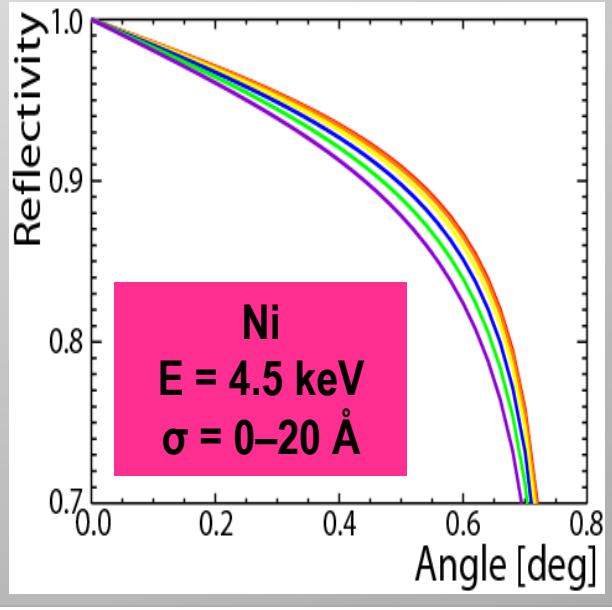

X-ray optics

- Thermally-formed glass substrates optics
  - Successfully used for NuSTAR
  - Leverage of existing infrastructure
    → Minimize costs & risks
  - Allows for optimization of the reflective coating (multilayers or thin metal films) of each layer

- NuSTAR launched 13 June 2012
  - Specialized tooling to mirror production and telescope assembly now available
  - Hardware can be easily configured to make optics with a variety of designs and sizes

- Many institutes from NuSTAR optics team [Columbia U, DTU Space, LLNL] in IAXO

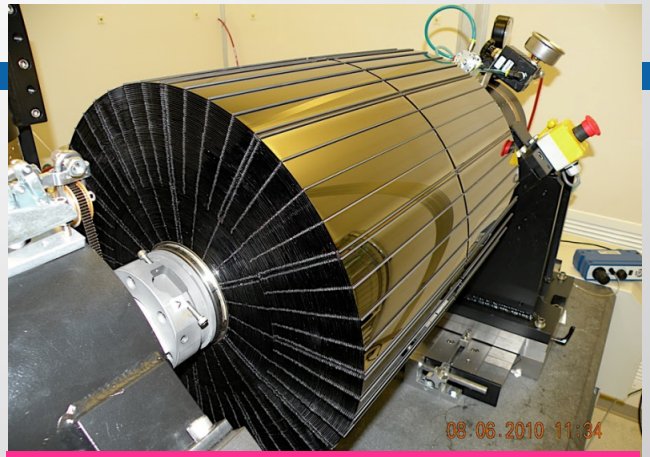

NuSTAR telescope

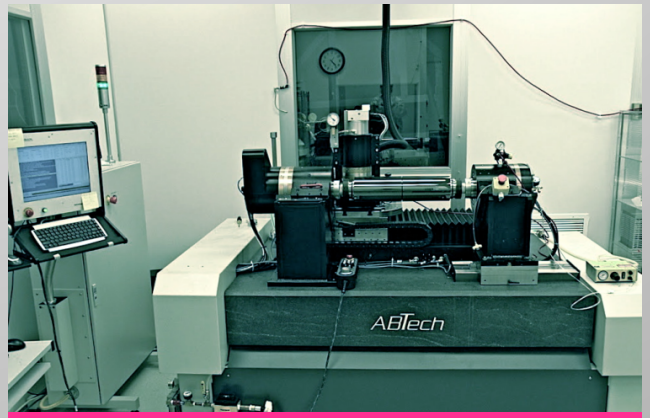

NuSTAR optics assembly machine

J Koglin *et al.*, *Proc SPIE*, **8147,** (2011)
W Craig *et al.*, *Proc SPIE*, **8147,** (2011)

Low-background detectors

- **Goal**
  - Micromegas detectors with at least 10^{-7} cts/(keV×cm^2×s)
  - May be possible to reach 10^{-8} cts/(keV×cm^2×s)
- **Work ongoing**
  - Experimental tests with current micromegas detectors at CERN, Saclay & Zaragoza
  - Underground setup at Canfranc
  - Simulation works to build up a background model
  - Design a new detector with improvements implemented

Simulations

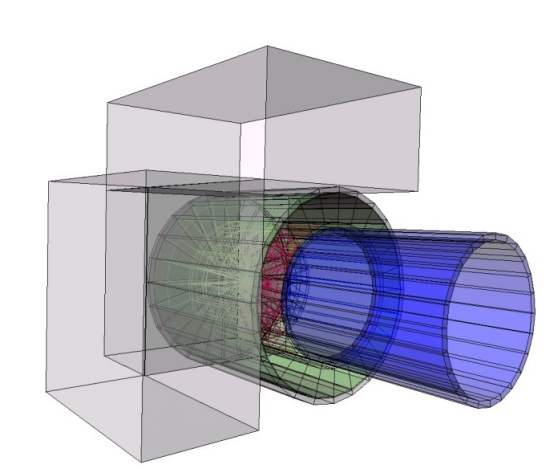

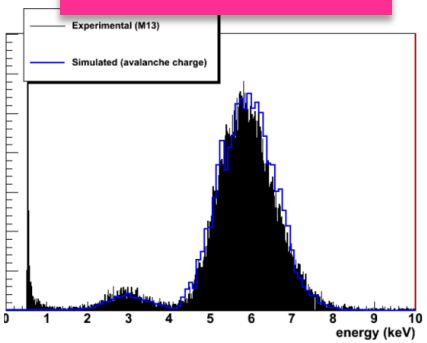

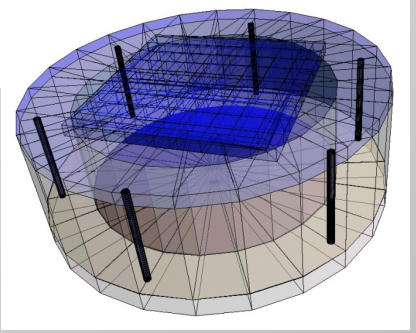

Shielding

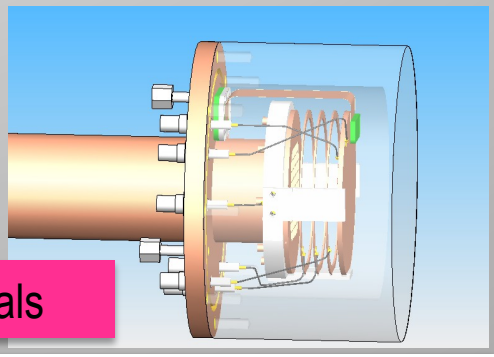

Radiopure materials

Low-background detectors

History of background improvement of Micromegas detectors at CAST

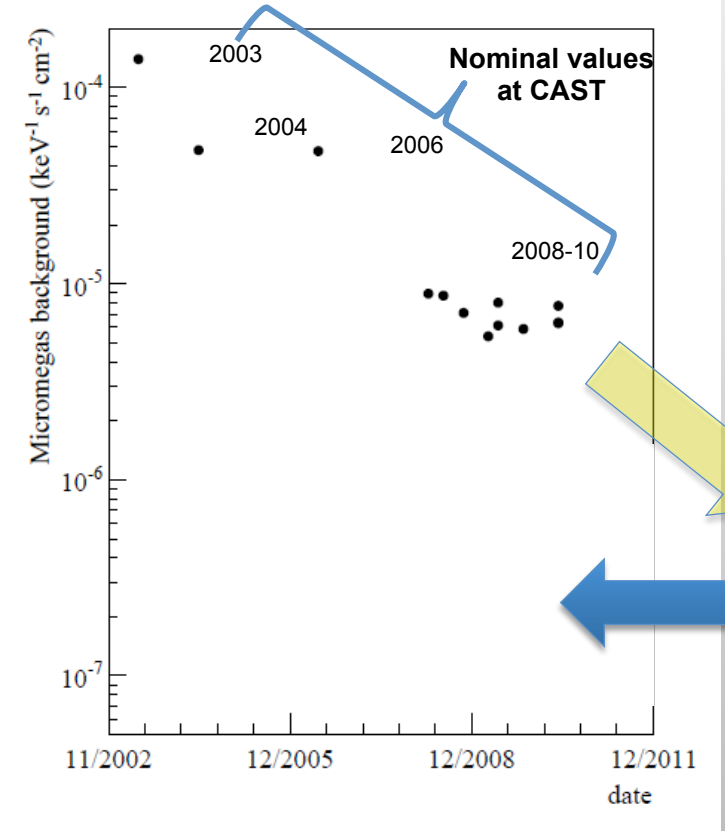

- Latest Micromegas: background improved by factor 20
  - Shielding
  - Radiopure materials & new manufacturing techniques (microbulk readouts)
  - More powerful post-processing methods
- Tests in controlled conditions underground at Canfranc:
  - Better shielding coverage
  - Thicker shielding

Underground testing of new configurations

Backgrounds around 2x10-7 cts/keV/s/cm^2 with improved shielding ~ 30× better than CAST

Pathfinder detector+optics for IAXO

- Small x-ray optics
  - Fabricated purposely using thermally-formed glass substrates (NuSTAR-like)
- Micromegas low background detector:
  - Apply lessons learned from R&D: compactness, better shielding, radiopurity,…
  - Aim for background of 10^{-7} cts/(keV×cm^2×s) or lower
- Collaboration of key groups: Saclay, Zaragoza, LLNL, DTU, Columbia

➡ Installation at CAST in 2014

➡ Tests of techniques and instrumentation; gain operational knowledge for IAXO

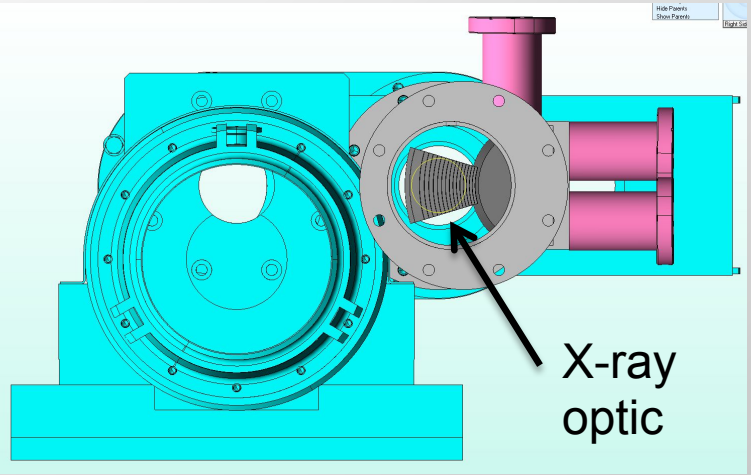

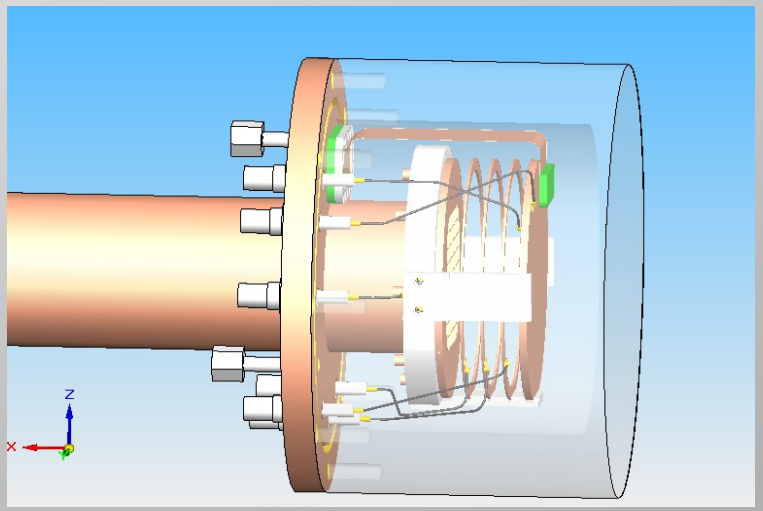

IAXO sensitivity prospects

- **Hadronic axion models**
  - Improvements of **factor 8-30** in $g_{a\gamma}$ ($4\times10^3 - 1\times10^6$ in signal strength)
  - QCD axions at masses of ~meV seem out of reach even for an improved axion helioscope... ***but ….***
- **Non-hadronic axion models** provide extra axion emission from the Sun through axion-electron Compton and bremsstrahlung processes

IAXO could improve current CAST sensitivity to non-hadronic axions by about 3 orders of magnitude

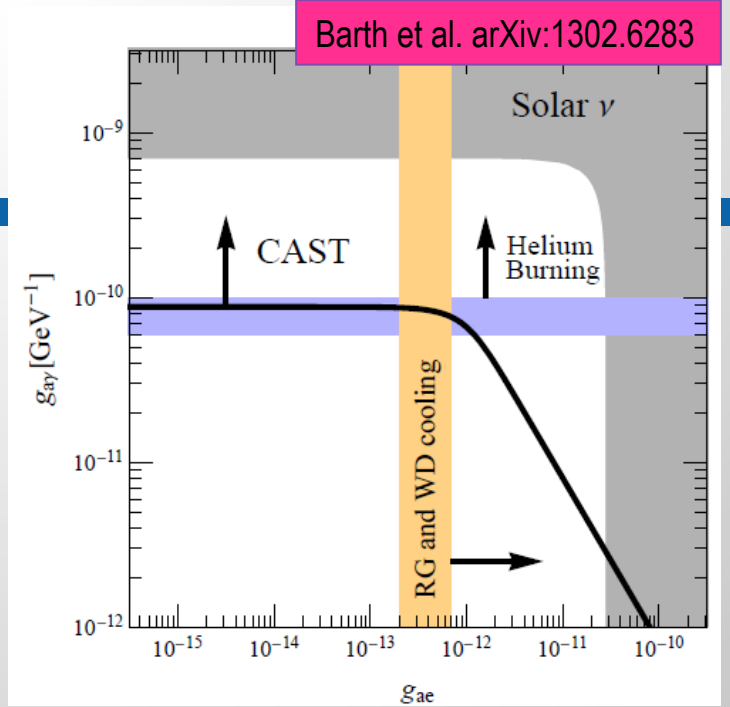

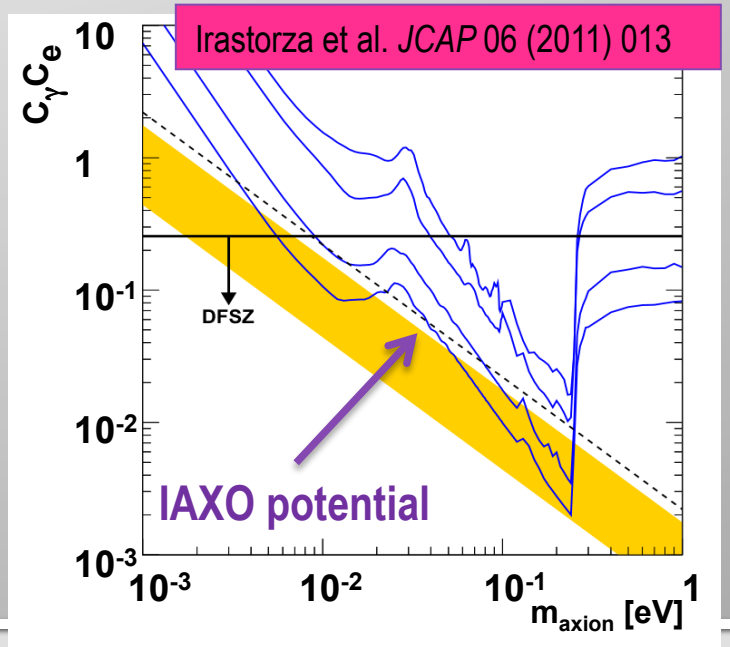

IAXO sensitivity prospects

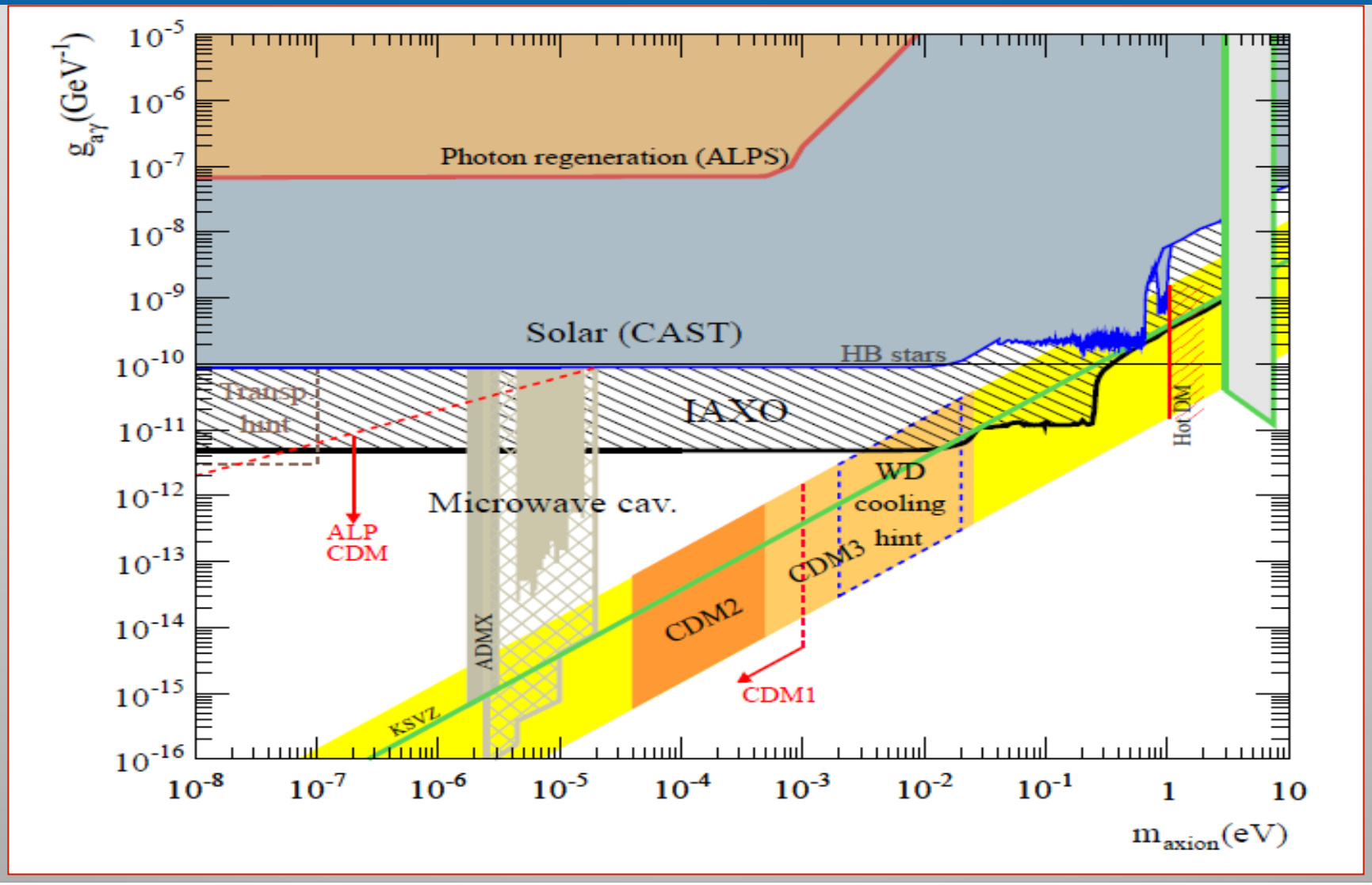

IAXO sensitivity prospects

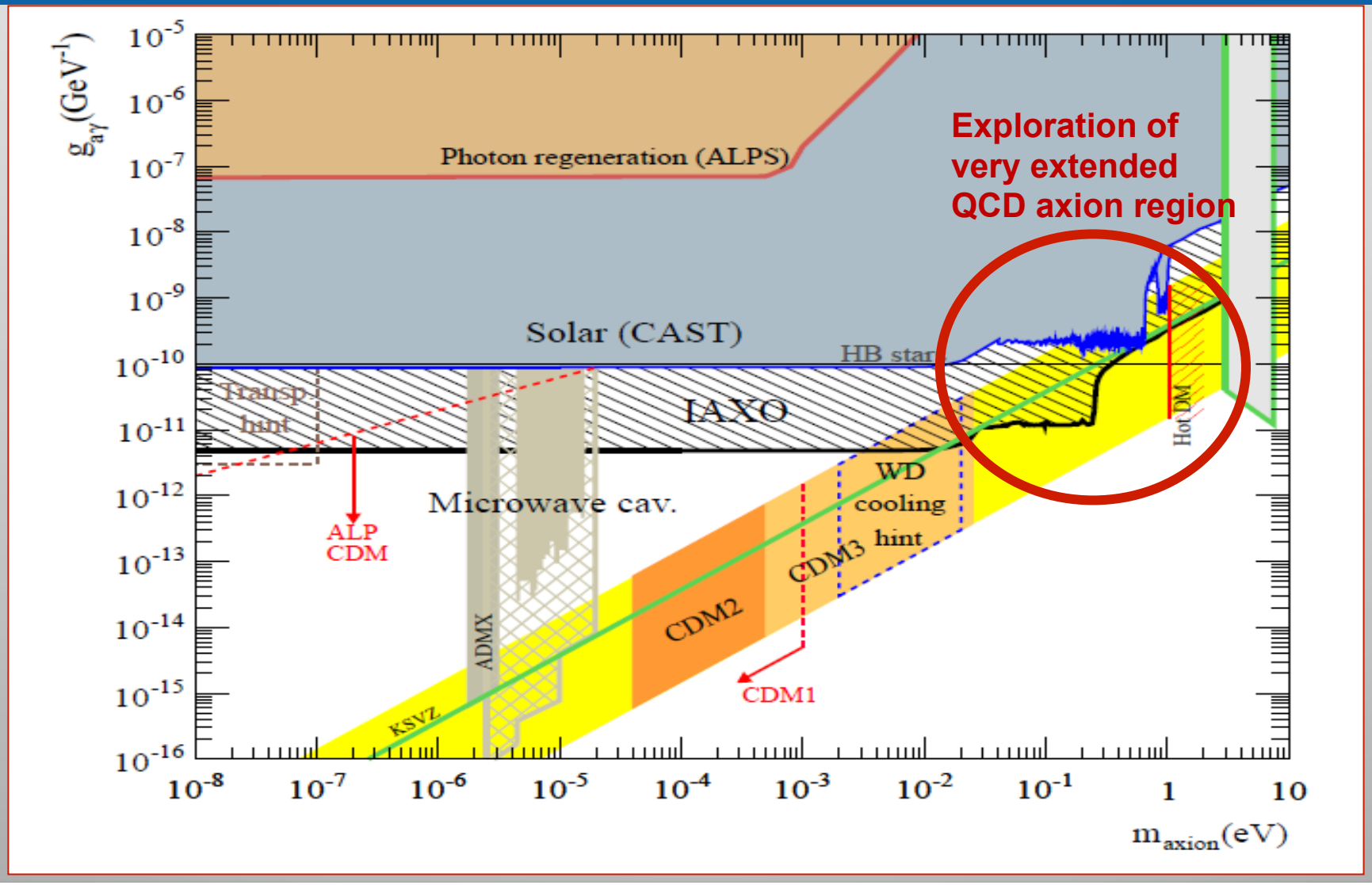

IAXO sensitivity prospects

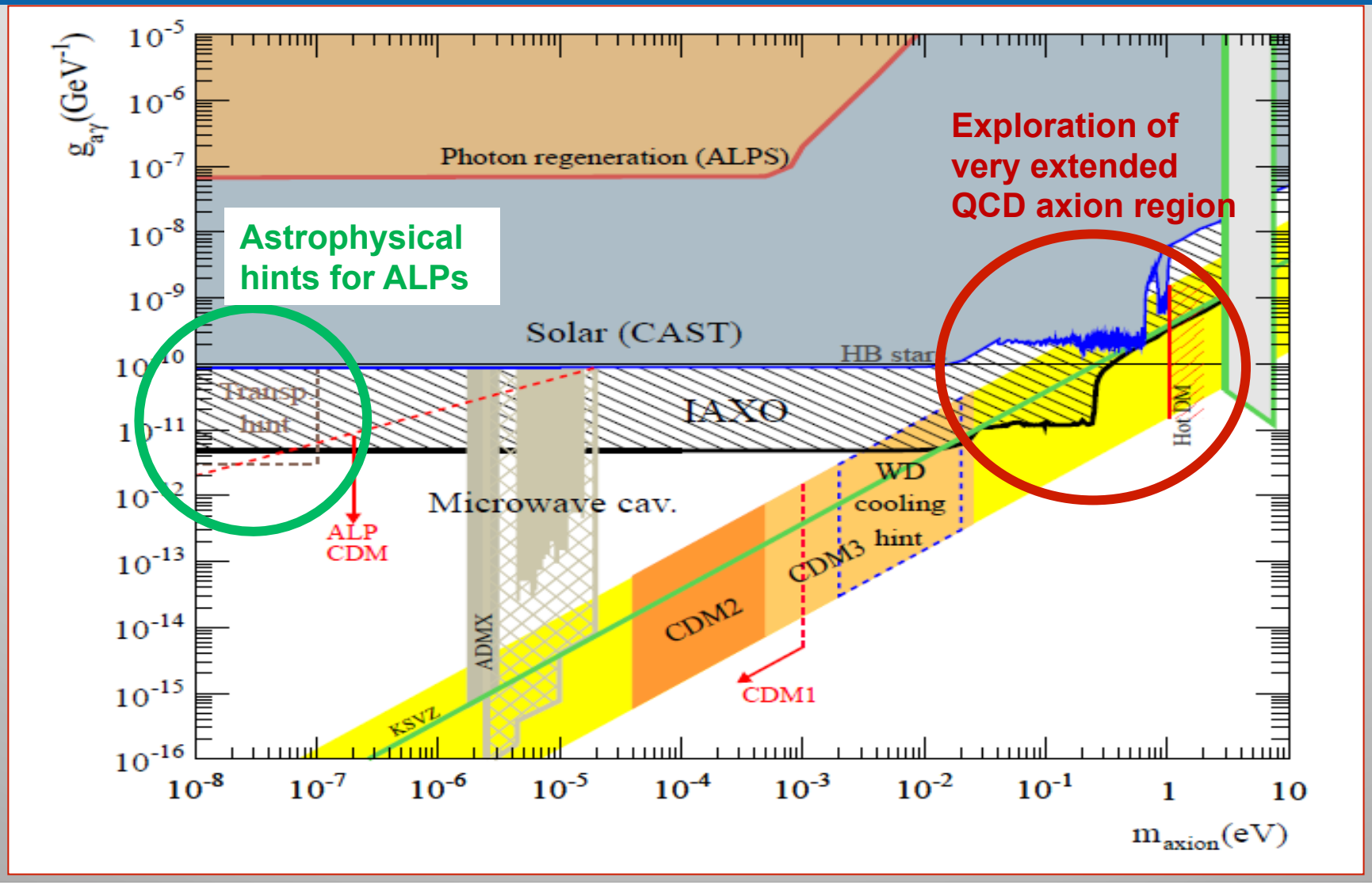

IAXO sensitivity prospects

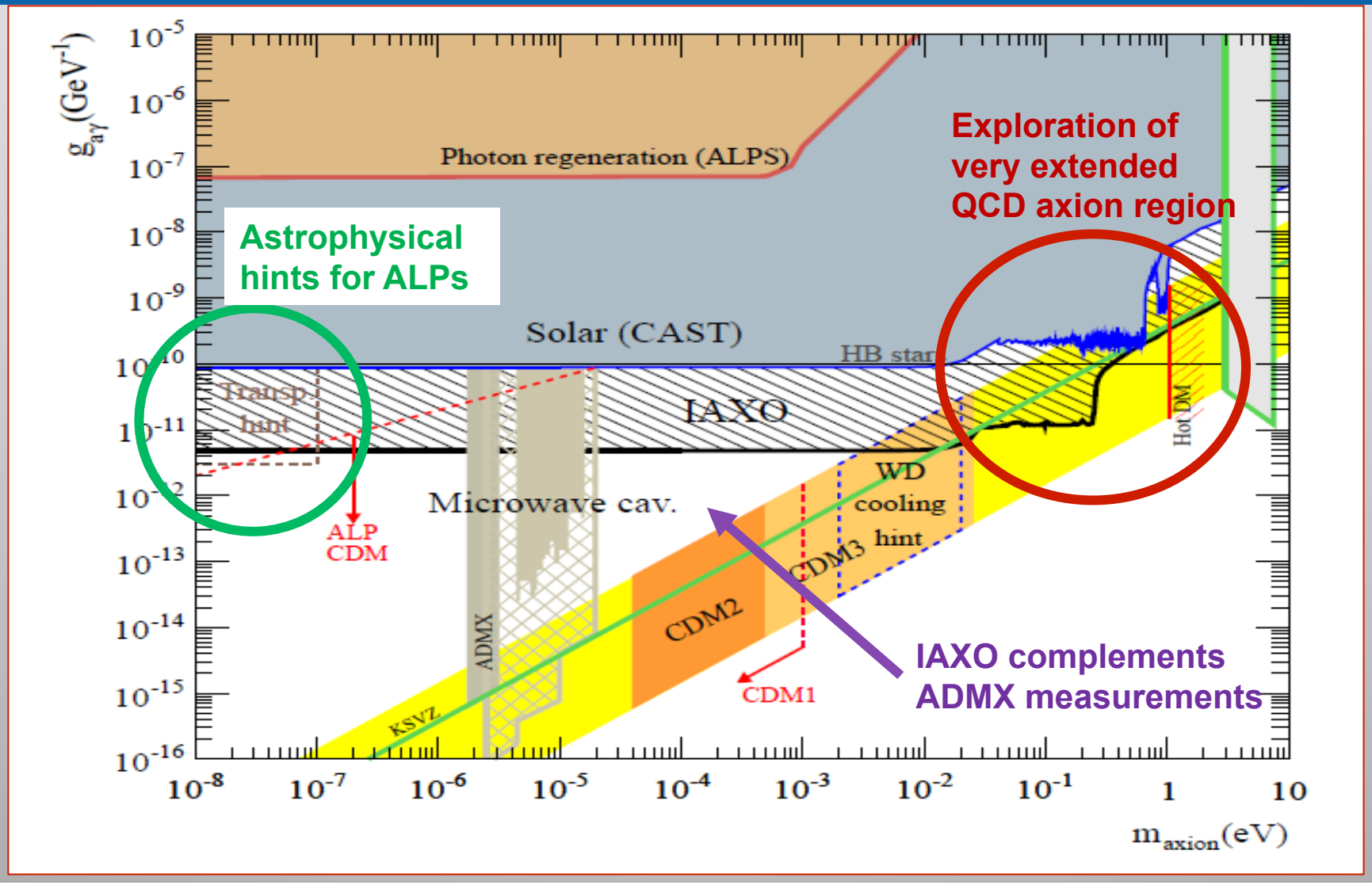

Collaboration status and schedule

- Collaboration formed and growing
  - 100 physicists, 20 institutions, 15 countries
- Conceptual design report in preparation; LOI solicited by CERN
- 4th gen helioscope supported in 2011 ASPERA roadmap
- Socializing IAXO with DOE/SC/HEP and communities of interest (dark matter, particle astrophysics, …)
- Budget [ROM] = $90−130M
  - $50−70M magnet
  - $20−30M CF
  - $15−20M optics
  - $ 5−10M detectors

Yr 1	Yr 2	Yr 3	Yr 4	Yr 5	Yr 6	Yr 7	Yr 8	Yr 9	Yr 10	Yr 11
Phase I		Phase II			Phase III		Phase IV			
Risk reduction Prototype: optics, detector, magnet elements		**Construction** Build: conventional facilities, magnet, optics detectors			**Commission** Integrate elements, calibrate, test operations		**Science observations:** Solar searches Extragalactic? Microwave cavities?			

Conclusions

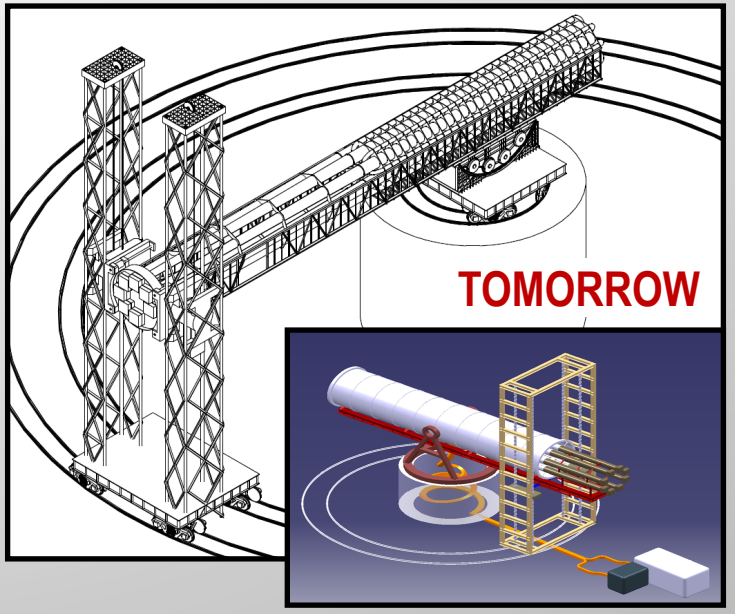

- **CAST is at the forefront of experimental axion physics**
  - CAST PRL2004 most cited experimental paper in axion physics
  - Expertise gathered in magnet, optics, low background detectors, gas systems
  - No other technique can realistically improve on CAST sensitivity over a wide mass range.
- **IAXO is a proposed 4th generation axion helioscope**
  - Good prospects to improve CAST by 1−1.5 orders of magnitude in sensitivity
  - Conceptual design effort is underway and will be completed in 2013
  - Together IAXO and haloscopes (ADMX) could explore a large part of the QCD axion model region in the next decade
  - Potential for other physics (White Dwarfs, ALPs,…)

Further physics cases

- More specific ALP or WISP (weakly interacting slim particle) models could be searched for at the low energy frontier of particle physics:
  - Paraphotons / hidden photons
  - Chamaleons
  - Non-standard scenarios of axion production
- Axions will also have more subtle implications on other astrophysical objects:
  - Neutron stars
  - SN
  - Red Giants in Glubular Clusters
- If equipped with microwave cavities, **dark matter** halo axions could be searched for, extending the sensitivity to lower masses.
  → under study [Baker et al. PRD 85]
- **IAXO as a true "axion facility" open to the community:**
- **Groups invited to contribute and enrich the science programme of IAXO.**