IF6: Nucleons, Nuclei and Atoms

Krishna Kumar (Umass), Zheng-Tian Lu (Argonne), Michael Ramsey-Musolf (Wisconsin)

Nuclear and Particle Physics at the Intensity Frontier, Part II

- Search for EDMs
- Measure the Neutron
- Test QCD

Zheng-Tian Lu

Physics Division, Argonne National Laboratory

Department of Physics, University of Chicago

Searches for Permanent Electric Dipole Moments (EDM)

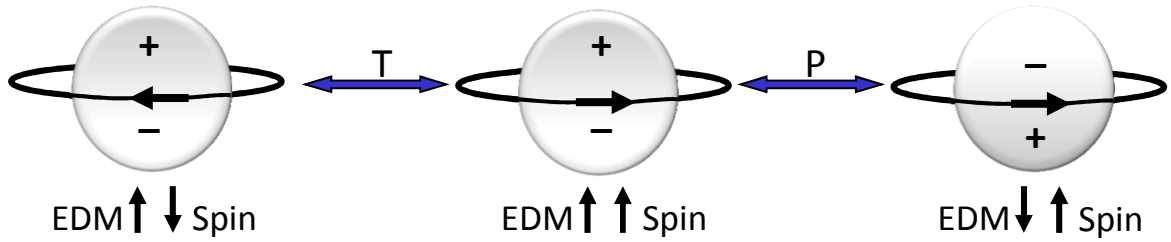

"EDMs extremely well motivated by possible CP violation in Hγγ and possible heavy m_{susy} , should be pushed as far as possible"

-- Bill Marciano, 4/25/2013

Mass Scale & ϕ_{CP} Sensitivity

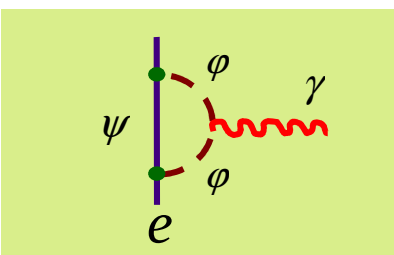

$$d_f \propto e \cdot \sin\phi_{CP} \cdot \frac{m_f}{\Lambda^2}$$

- *$\sin\phi_{CP} \sim 1$! $M > 5$ TeV*
- *$M \sim 500$ GeV! $\sin\phi_{CP} < 10^{-2}$*

Can provide the missing link for explaining matter – antimatter asymmetry *Electroweak baryogenesis*. Morrisesy & Ramsey-Musolf, arXiv:1206.2942 (2012)

Opportunities at the Intensity Frontier

Present: ^{225}Ra: 10^7 – 10^8 /s

Radioactive isotope facilities:

- FRIB (B. Sherrill, MSU) ^{225}Ra: 10^9 - 10^{10} /s
- ISOL@FRIB, Project-X (J. Nolen, Argonne)
  - 1 mA of protons on thorium target
  - ^{225}Ra: 10^{13} /s, ^{223}Rn: 10^{11} /s

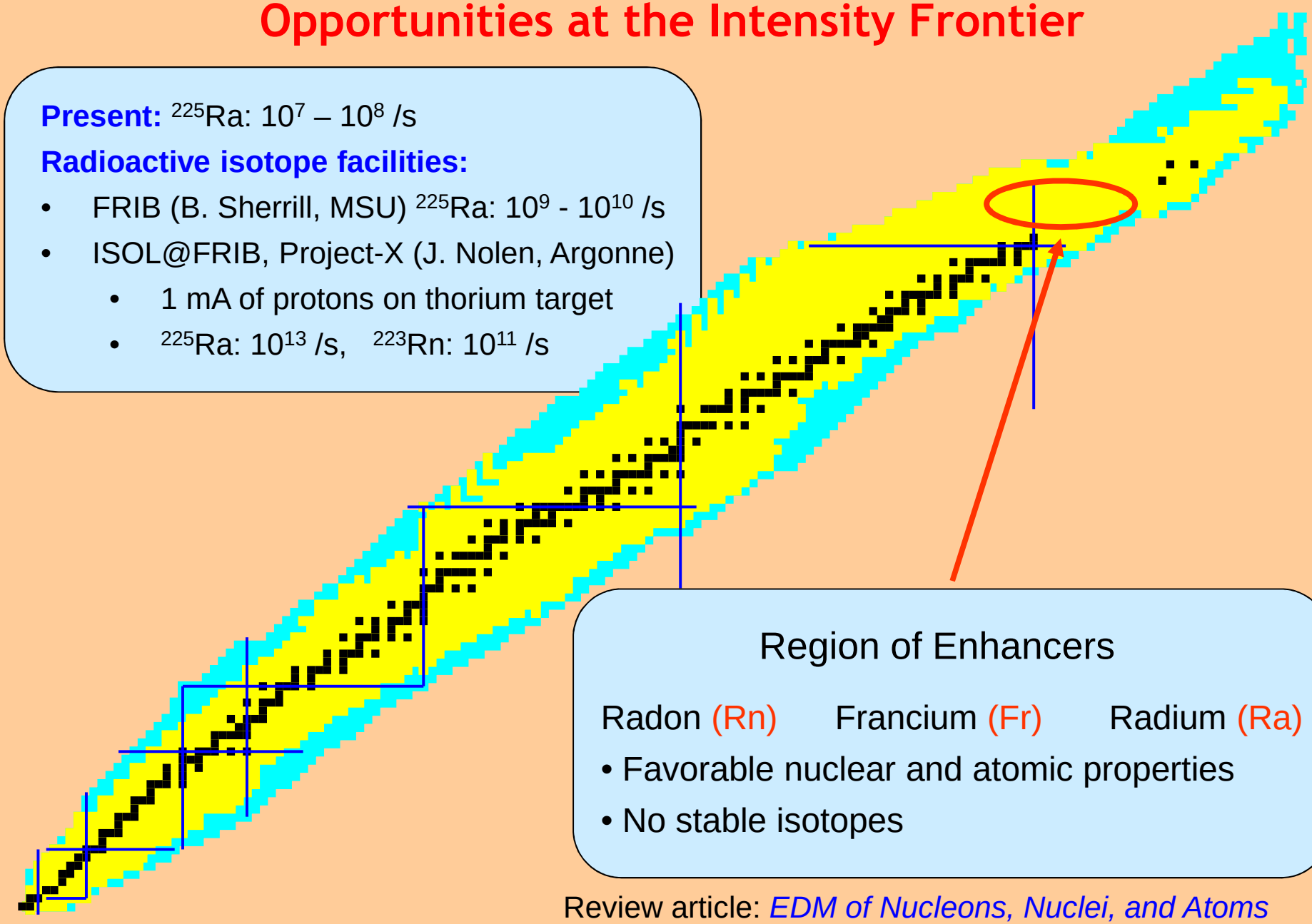

Region of Enhancers

Radon (Rn) Francium (Fr) Radium (Ra)

- Favorable nuclear and atomic properties
- No stable isotopes

Review article: *EDM of Nucleons, Nuclei, and Atoms*
Engel, Ramsey-Musolf, van Kolck, arXiv:1303.2371 (2013)

Radium EDM Search at Argonne

Progress

- 2007 – Magneto-optical trap (MOT) of radium realized;

  J.R. Guest *et al.*, Phys. Rev. Lett. (2007)
- 2010 – Optical dipole trap (ODT) of radium realized;
- 2011 – Atoms transferred to the measurement trap;

  R.H. Parker *et al*. Phys. Rev. C (2012)
- 2012 – Spin precession of Ra-225 observed.

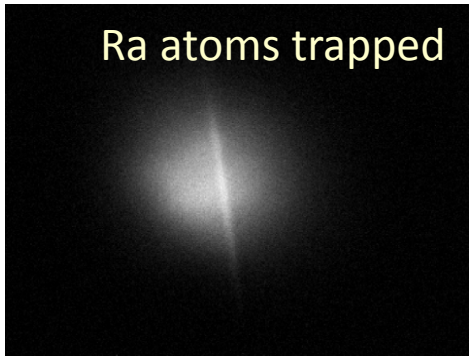

Outlook

- Next 5 years: 10 – 100 x 10^{-28} e-cm
- 2020 and beyond: 1 x 10^{-28} e-cm *

  * at an accelerator-based isotope production facility

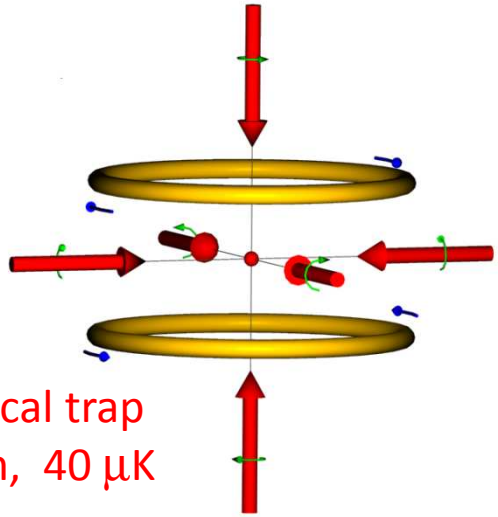

Magneto-optical trap
1 mm, 40 µK

We acknowledge support by DOE, Office of Nuclear Physics

A proposed proton EDM experiment

- 40 m radius, all-electric storage ring
- Brookhaven National Lab
- Fermi Lab: accumulator ring, need polarized proton source

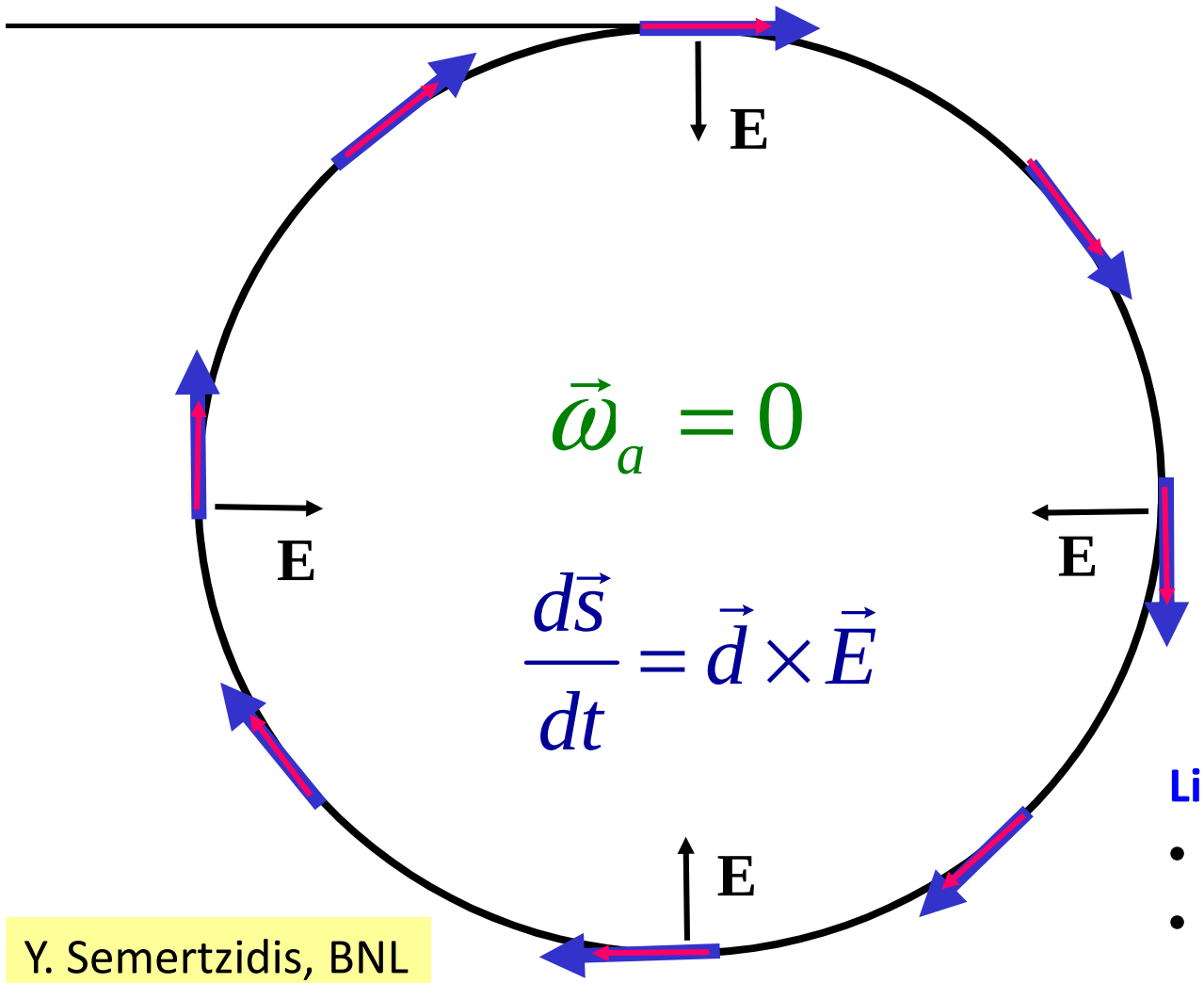

$$\vec{\omega}_a = 0$$

$$\frac{d\vec{s}}{dt} = \vec{d} \times \vec{E}$$

At the magic momentum

$$p = \frac{m}{\sqrt{a}} = 0.7 GeV / c$$

the spin and momentum vectors precess at the same rate in an E-field

Limits and Sensitivities

- 2020: 0.1 x 10^{-28} e-cm
- Ultimate: 0.01 x 10^{-28} e-cm

Y. Semertzidis, BNL

Origin of elementary EDMs

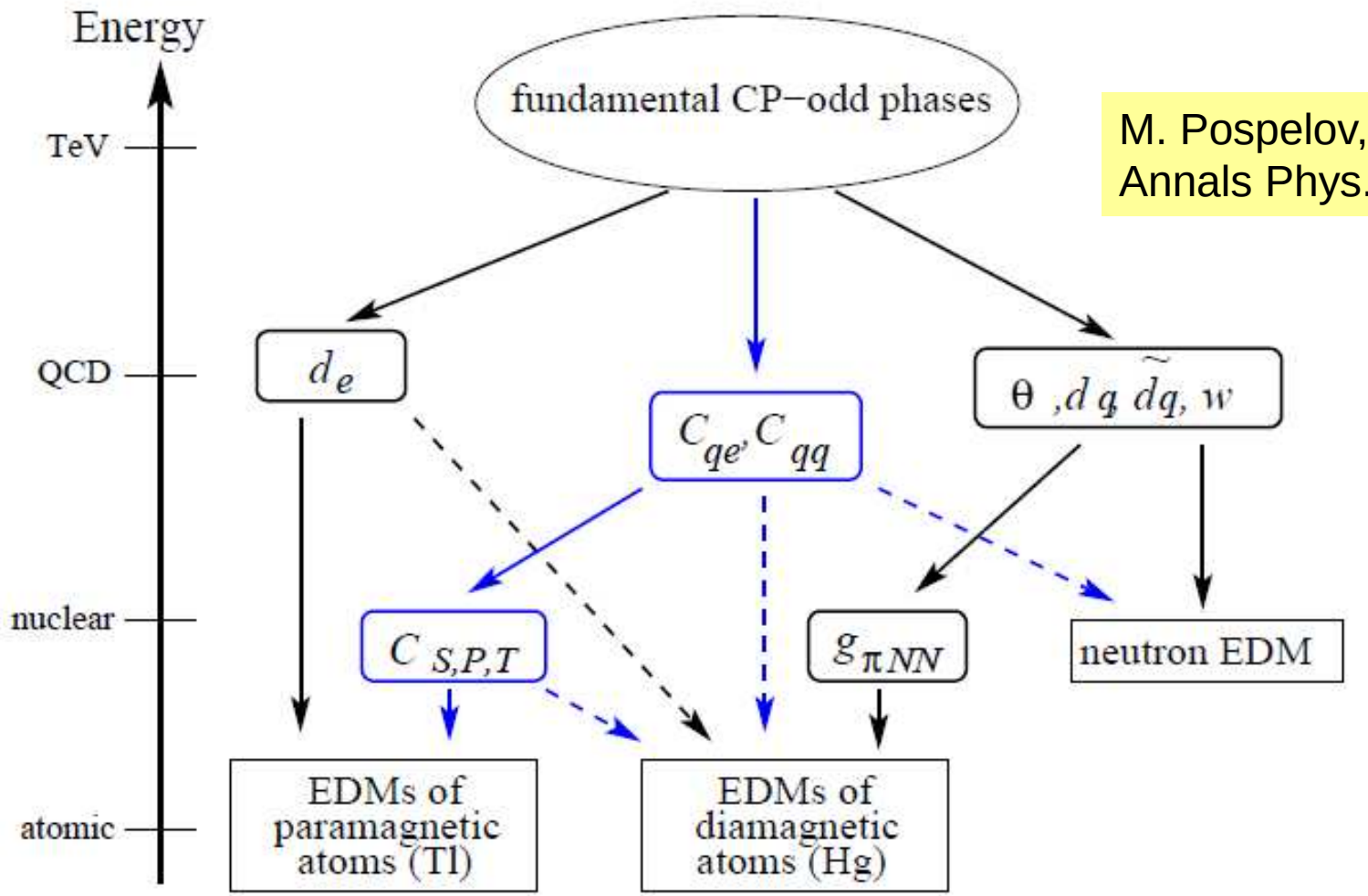

M. Pospelov, A. Ritz, Annals Phys.(2005)

"Clearly, if EDM is found, we will need multiple systems to identify the origin of new CP violation." -- B. Filippone, Caltech

Neutron EDM

nEDM @ SNS

Limits and Sensitivities

- Current: 300 x 10^{-28} e-cm
- Next 5 years: 50 – 100 x 10^{-28} e-cm
- 2020 and beyond: 3 – 5 x 10^{-28} e-cm

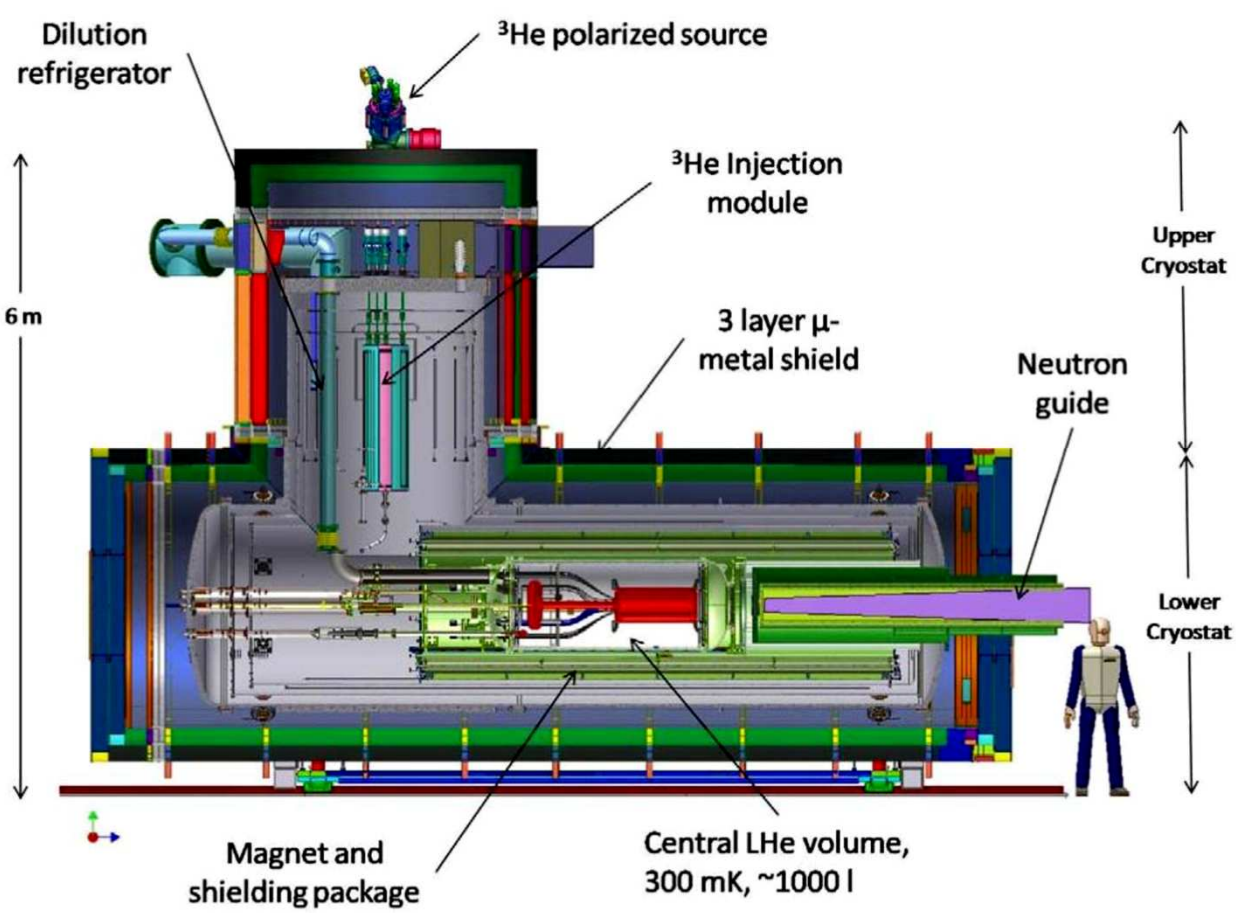

Dispersion curves for He-II and free neutrons

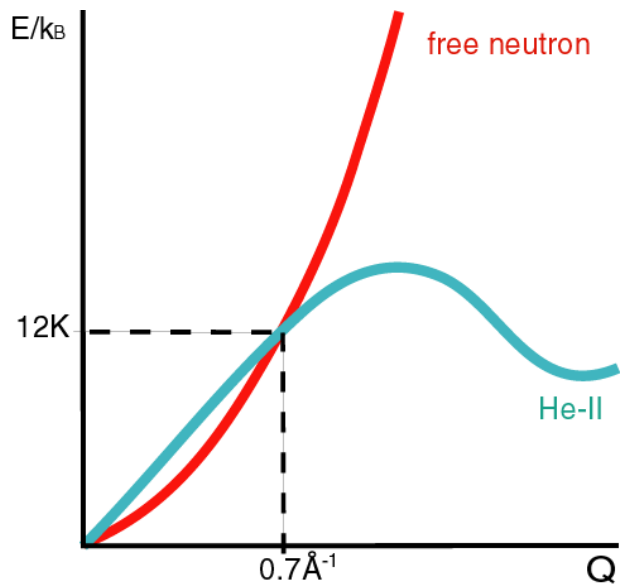

Golub & Pendlebury Phys. Lett. (1977)

B. Filippone, Caltech

Cold and Ultracold Sources for Fundamental Neutron Physics

Dedicated sources and CN beams optimized for particle and nuclear physics experiments can dramatically increase the physics reach of current and planned experiments

Ideas

Cold Neutrons

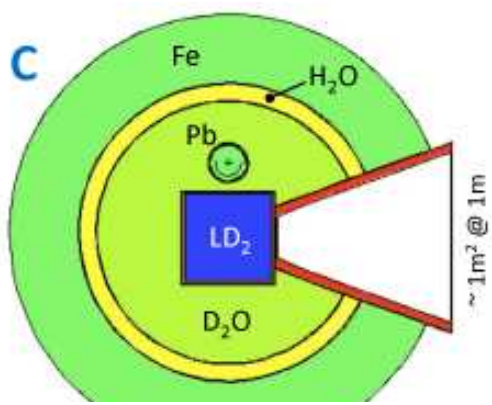

Project X N-Nbar Source

Initial UT model (C) L. Castellanos/UT

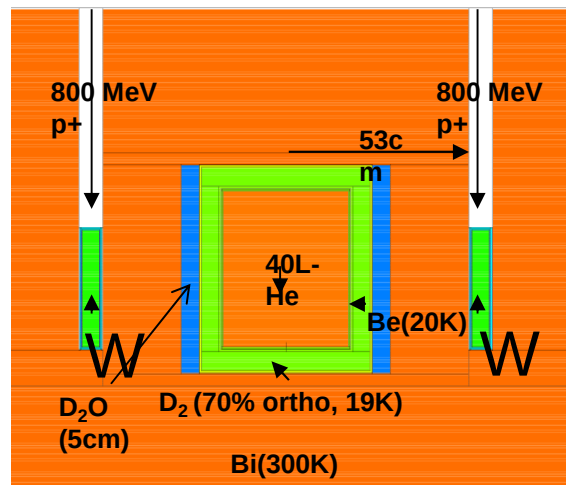

UCN

Concept for LANL UCN Source

Physics Opportunities at the Intensity Frontier:

(CN)
- Neutron-Antineutron Oscillations
- Hadronic Parity Violation
- Interferometry

(UCN)
- Neutron EDM
- Gravitational Bound States
- Mirror Neutron Search

(CN or UCN)
- Weak Decays
- WISPS
- Limits on Neutron El. Charge
- Dark Energy Tests

A. Young, NCState

Neutron Beta-Decay with UCN

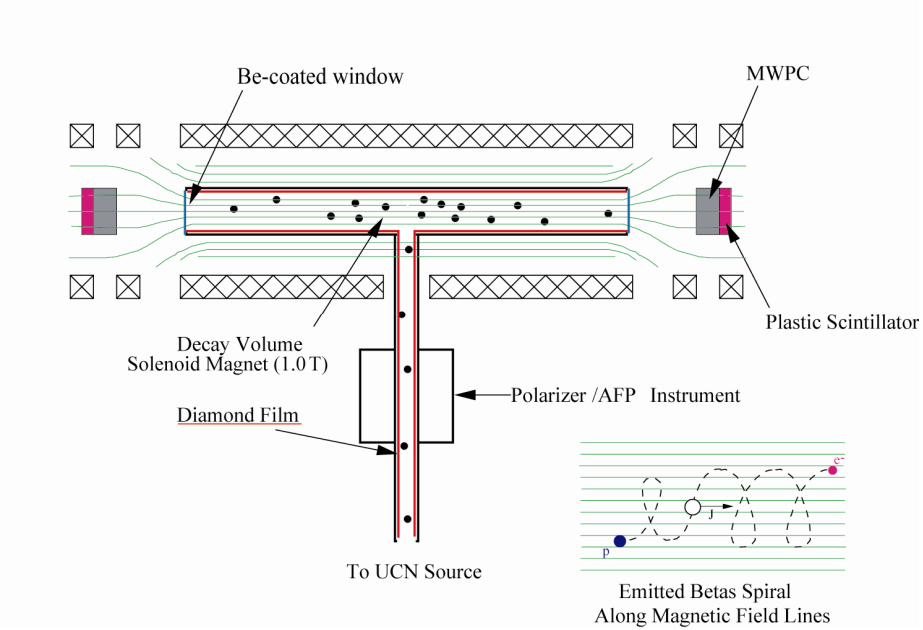

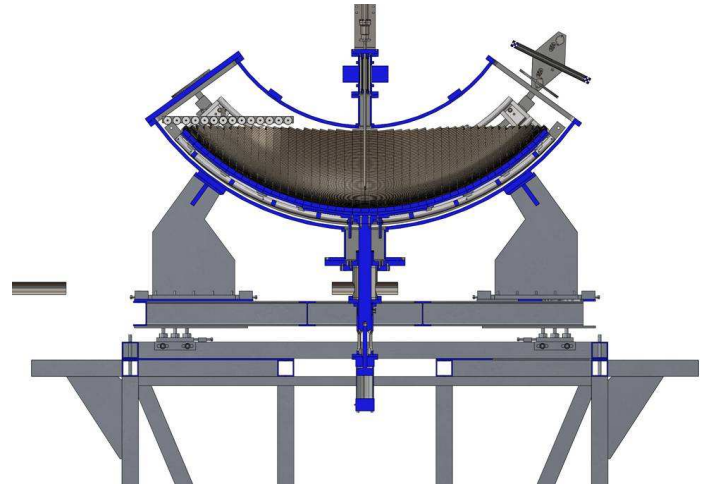

UCNA and UCNB

β-asymmetry
0.3%

ν-asymmetry
0.1%

Angular correlations using
Polarized UCN

(holding time ≈17 s)

UCNτ

1 s

Lifetime using magnetically
stored UCN

(volume ≈ 700 liter)

All limited by available UCN current...(total production)
Roughly factor of 5 before experiments "saturate" potential

A. Young, NCState

π_{l2} & β Decay: Diagnostic Tool

CKM Unitarity

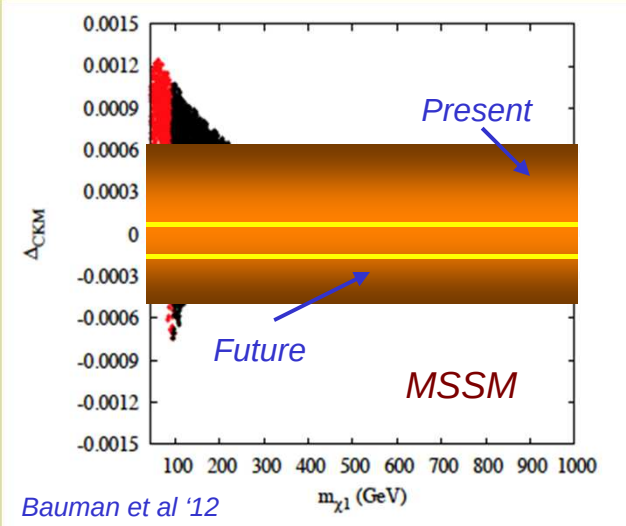

Bauman et al '12

CKM Unitarity

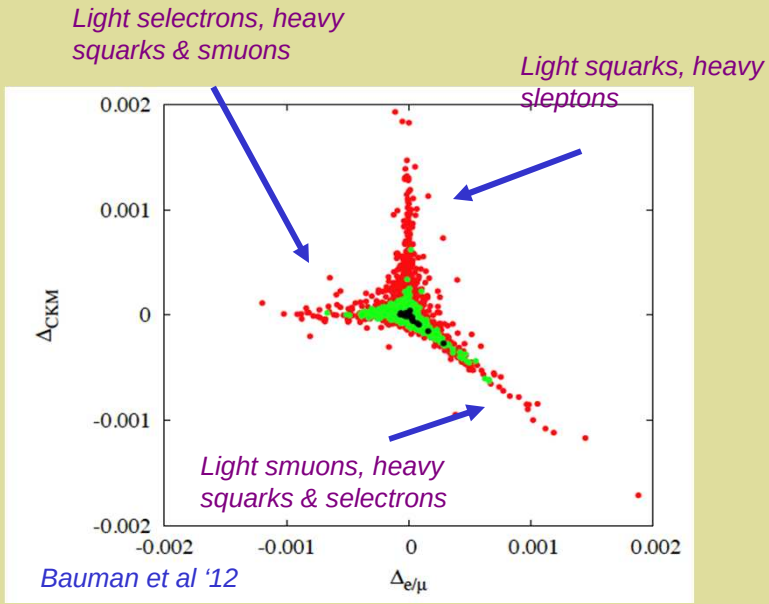

Bauman et al '12

Pion leptonic

Scalar

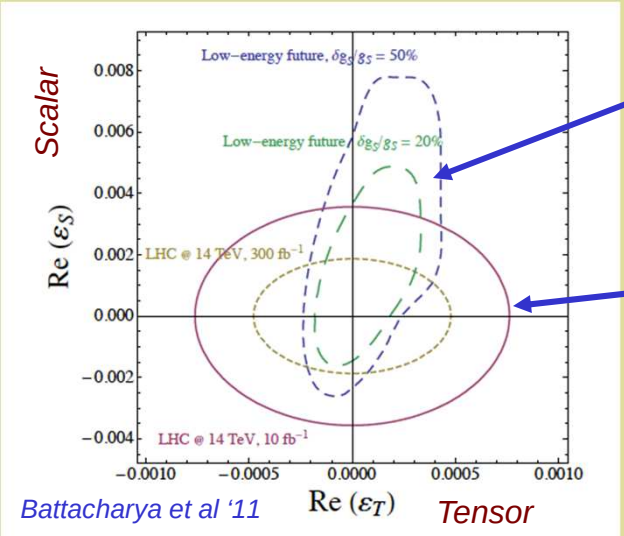

Battacharya et al '11

Tensor

M. Ramsey-Musolf, Wisconsion

Polarized Drell-Yan @ Fermilab Main Injector

- **Test Fundamental Prediction of QCD Gauge formalism and factorization**

$$f_1^{\perp}(x,k_T)\big|_{\mathrm{DIS}} \stackrel{?}{=} -f_1^{\perp}(x,k_T)\big|_{\mathrm{DY}}$$

  - Does the Sivers' function change sign?
- Requires Polarized beam
  - Advantage—the beam is a blow torch—Luminosity
  - Disadvantage—polarized beam is presently ***virtual***
  - Cost:

    $6.5M + 65% (contingency and management) = $10.5M

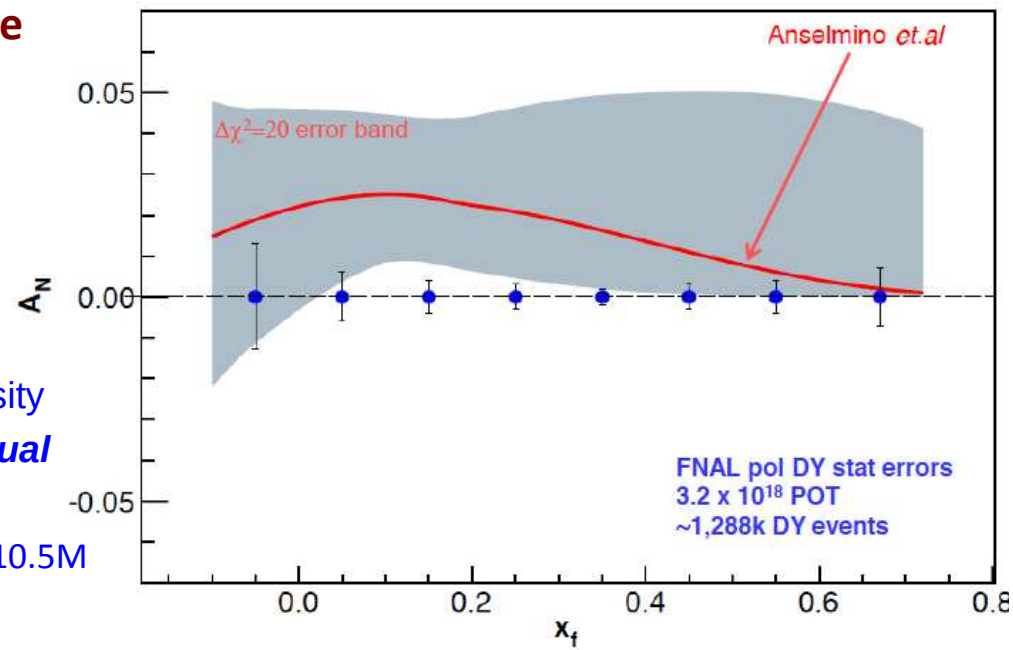

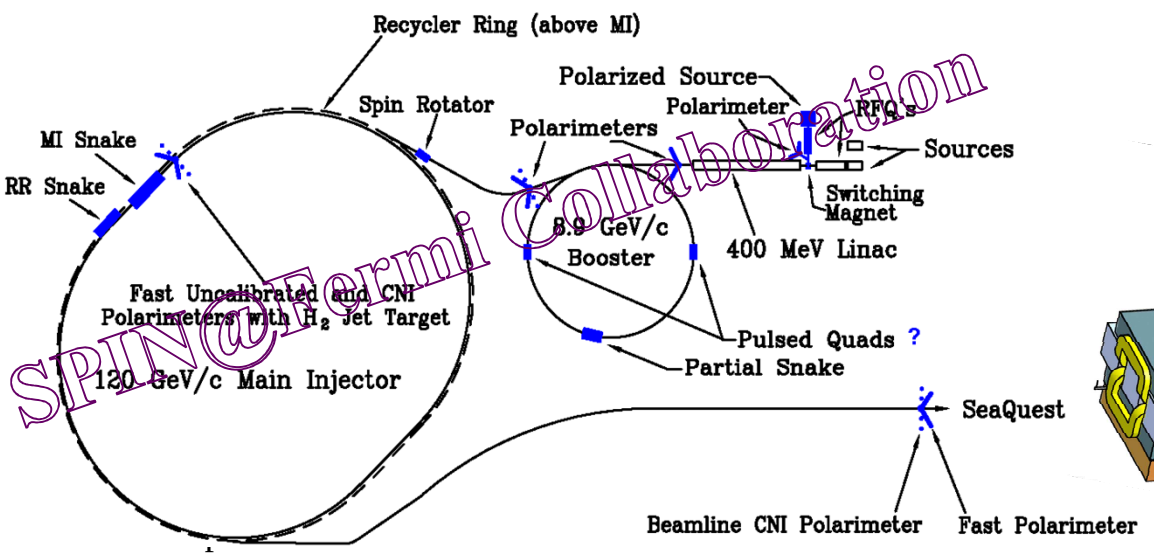

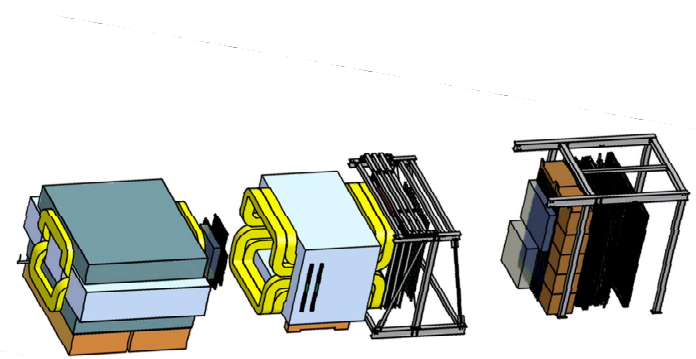

P. Reimer, Argonne

Conclusions

Based on remarks by R. S. Tschirhart, FNAL

- Fundamental symmetries are of great interests to both particle physics and nuclear physics communities:
  - EDMs, n-nbar, weak decays…
- Research opportunities with Project X (http://projectx.fnal.gov/index.shtml)
- Partnerships on critical R&D issues among DOE/NP+HEP, NSF/NP+EPP, NIST
- Join neutrinos and fundamental symmetries interest group (https://lansce.lanl.gov/adeps/NuFunSym.shtml)