# Accelerator Science and Technology and Accelerator Stewardship at Argonne National Laboratory

**Rod Gerig**
Argonne Accelerator Institute Director

Argonne-Uchicago-Fermilab Collaboration Meeting
May 28, 2013

# Accelerator S&T at Argonne

- Accelerator S&T considered an Argonne Core Competency
- Primarily done in three divisions
  - Accelerator Systems Division of the APS (BES)
  - High Energy Physics Division (HEP)
  - Physics Division (NP)

and loosely coordinated by the Argonne Accelerator Institute. The AAI board consist of AAI director and the division directors of the three divisions, and meets regularly.

AAI provides single POC for Argonne Accelerator interaction and stewardship activities.

# APS

- Key accelerator S&T in APS-U, $393.0 M project
  - Development of first superconducting undulator
  - Development of transverse deflecting SCRF cavities
- Much of APS-U involves x-ray beamline build-out and enhancements
- Also involved in SC stewardship initiative to identify high-efficiency alternatives to existing RF sources

# SCU Design – Cryostat Structure

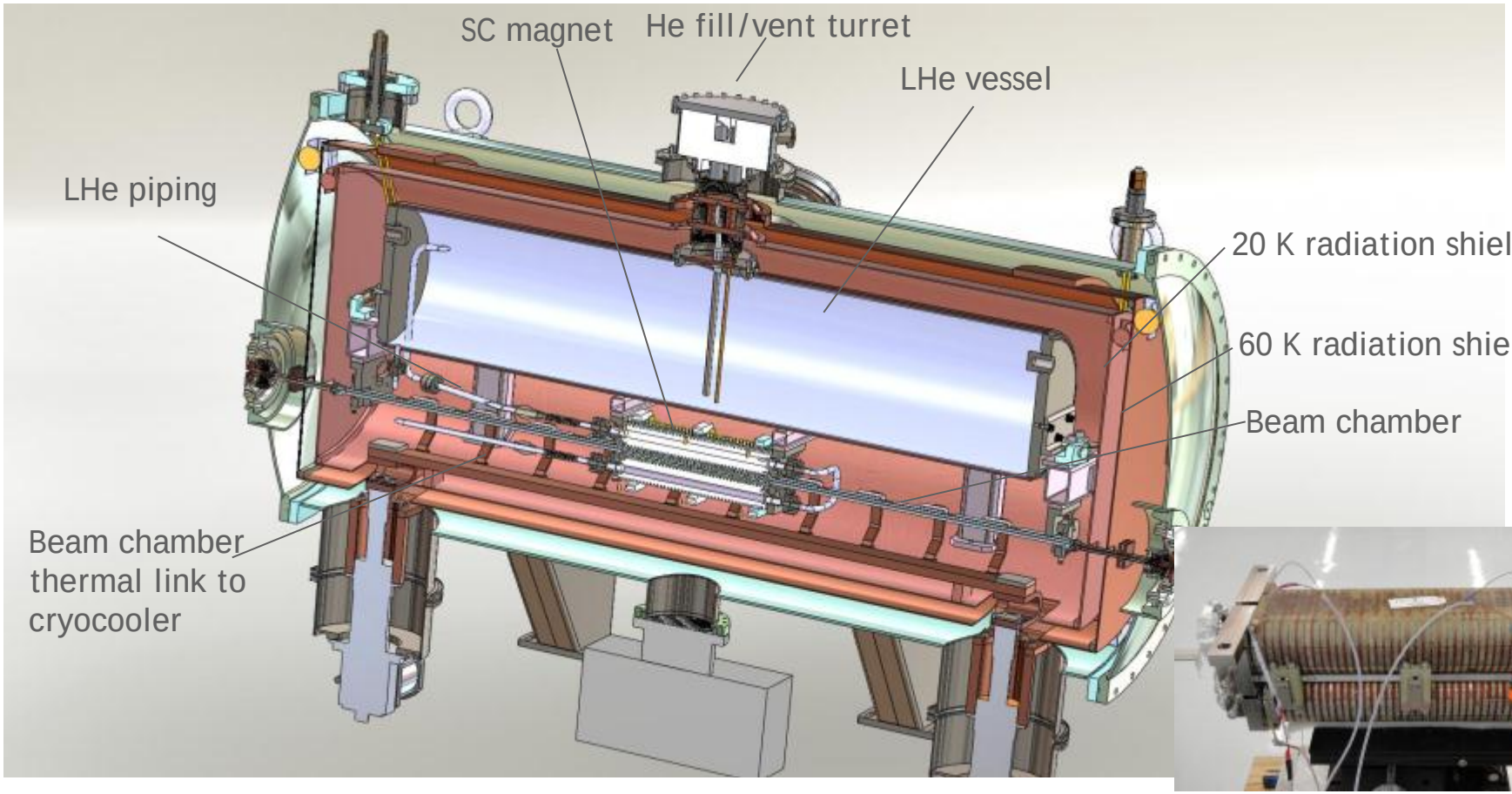


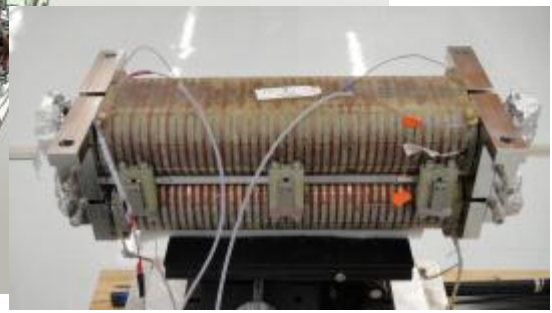

Design of SCU0 is based on the APS experience of making short SC magnetic structures and on experience by a team from Budker Institute, Novosibirsk of making cryostats for their SC wigglers.

slide courtesy George Srajer

# SCU0 Installed in December 2012

slide courtesy George Srajer

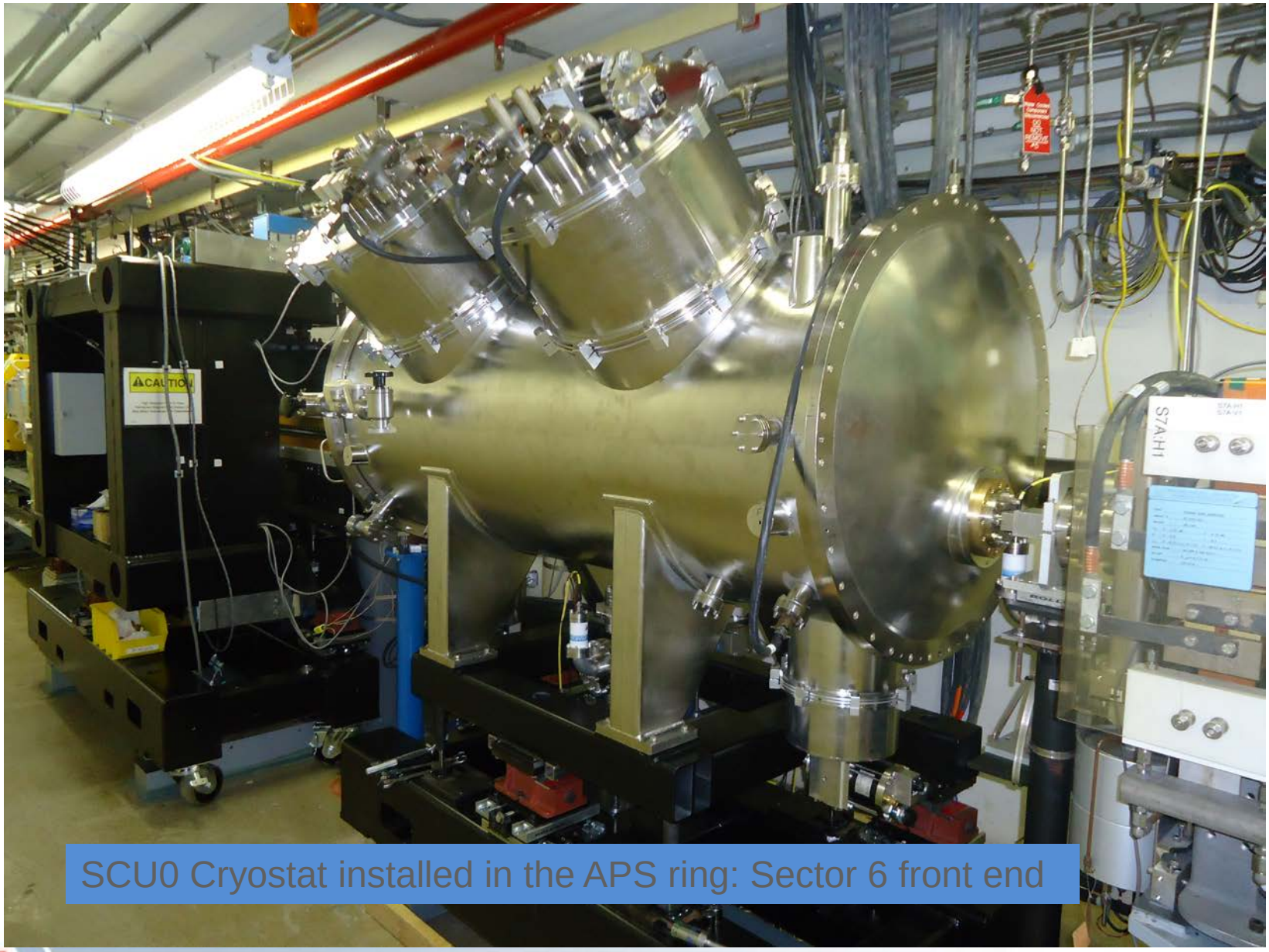


SCU0 Cryostat installed in the APS ring: Sector 6 front end

# SCU0 5th Harmonic and Undulator A at 85 keV

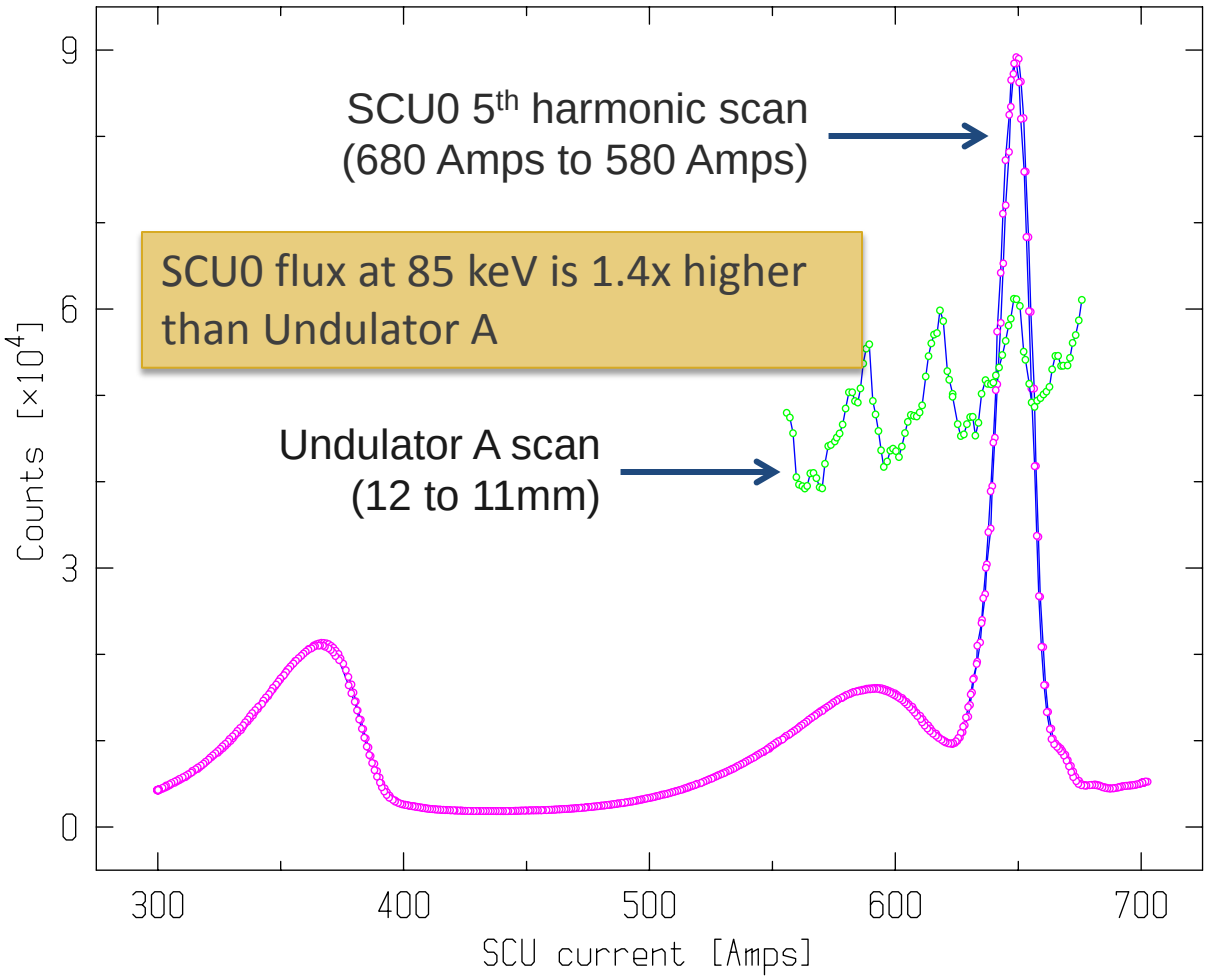

SCU0 spatial distribution at 85 keV as undulator current is scanned

slide courtesy George Srajer

SCU0 – 1.6 cm period with 20 poles (~ 0.35 m long)
Undulator A – 3.3 cm period 70 poles (2.3 m long)

# SCU Team

Y. Ivanyushenkov (ASD)
Technical Lead and Commissioning Co-Lead

**Core Team**
Management: E. Gluskin*(ASD-MD)
*Simulation: R. Dejus (ASD-MD)*
S. Kim (ASD-MD)
R. Kustom (ASD-RF)
Y. Shiroyanagi (ASD-MD)
*Design: D. Pasholk (AED-DD)*
D. Skiadopoulos (AES-DD)
E. Trakhtenberg (AES-MED)
*Cryogenics: J. Fuerst (ASD-MD)*
Q. Hasse (ASD-MD)
*Measurements: M. Abliz (ASD-MD)*
C. Doose (ASD-MD)
M. Kasa (ASD-MD)
I. Vasserman (ASD-MD)
*Controls: B. Deriy (ASD-PS)*
M. Smith (AES-CTL)
*Tech. support*: *S. Bettenhausen (ASD-MD)*
K. Boerste (ASD-MD)
J. Gagliano (ASD-MOM)
M. Merritt (ASD-MD)
J. Terhaar (ASD-MD)

**Budker Institute Collaboration**
(*Cryomodule and Measurement System Design)*
N. Mezentsev
V. Syrovatin
V. Tsukanov
V. Lev
**FNAL Collaboration**
*(Resin Impregnation)*
A. Makarov
**UW-Madison Collaboration**
*(Cooling System)*
J. Pfotenhauer
D. Potratz
D. Schick

K. Harkay
Commissioning Co-Lead
*Commissioning Team*
L. Boon (ASD-AOP)
M. Borland (ASD-ADD)
G. Decker* (ASD-DIA)
J. Dooling (ASD-AOP)
L. Emery* (ASD-AOP)
R. Flood (ASD-AOP)
M. Jaski (ASD_MD)
F. Lenkszus (AES-CTL)
V. Sajaev (ASD-AOP)
K. Schroeder (ASD-AOP)
N. Sereno (ASD-AOP)
H. Shang (ASD-AOP)
R. Soliday (ASD-AOP)
X. Sun (ASD-DIA)
A. Xiao (ASD-AOP)
A. Zholents (ASD-DD)

# SCU Team - Continued

*Technical Support*

| | |
|---|---|
| R. Bechtold (AES-MOM) | D. Capatina (AES-MED) |
| J. Collins (AES-MED) | P. Den Hartog* (AES-MED) |
| R. Farnsworth* (AES-CTL) | G. Goeppner* (AES-MOM) |
| J. Hoyt (AES-MOM) | W. Jansma (AES-SA) |
| J. Penicka* (AES-SA) | J. Wang* (ASD-PS) |
| S. Wesling (AES -SA) | |

**Excerpts from Jim Murphy e-mail sent on January 23, 2013:**

"Light Source Directors: Brian Stephenson & George Srajer shared some exciting news from the APS/APS-U team with BES yesterday. The APS/APS-U team obtained the first spectra from the prototype superconducting undulator that they recently installed in the APS ring…. I encourage each of you to think how this exciting new technology could play a role in your facilities. Congratulations to the APS/APS-U team on this achievement."

# Short Pulse X-Ray (SPX) Upgrade @ ANL-APS

- There is a need to provide intense, tunable, picosecond x-ray pulses with high repetition rates for time domain experiments.
- Proposed by A. Zholents et al, NIM A, 425 (1999) 385-389.

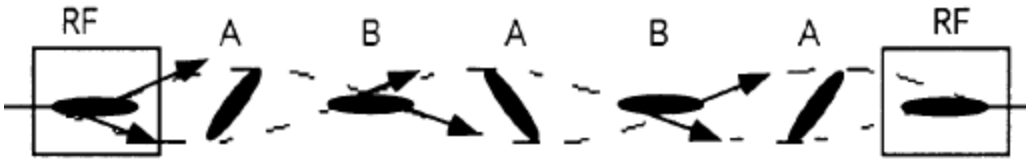


- Create a correlation between the longitudinal coordinates of the electrons within the electron-bunch and their vertical angles.

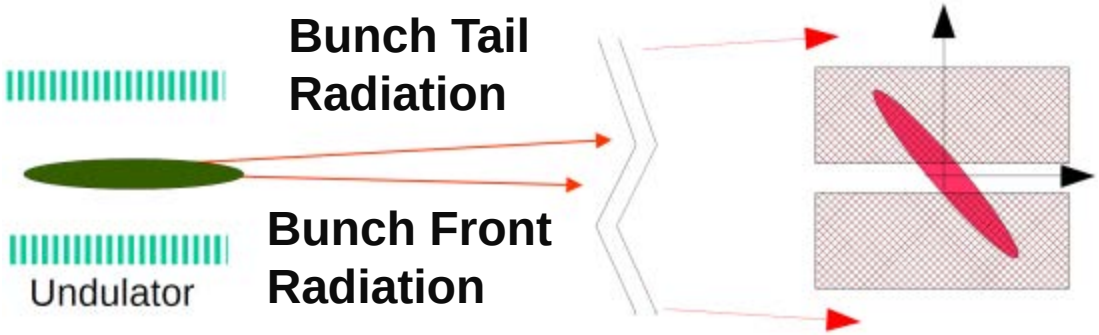


- Sub-picosecond x-ray pulses can be created with slicing.
- This technique can produce high average intensity x-ray radiation for the study of ultra-fast phenomena.

# SPX SRF at the Advanced Photon Source

- Collaboration of ANL-APS with JLab (cavity and cryomodule design & fab) and ANL-PHY (cavity and cryomodule testing).
- Off line cavity test results have been good.
- Upgrade requires two 4 cavity cryomodules.

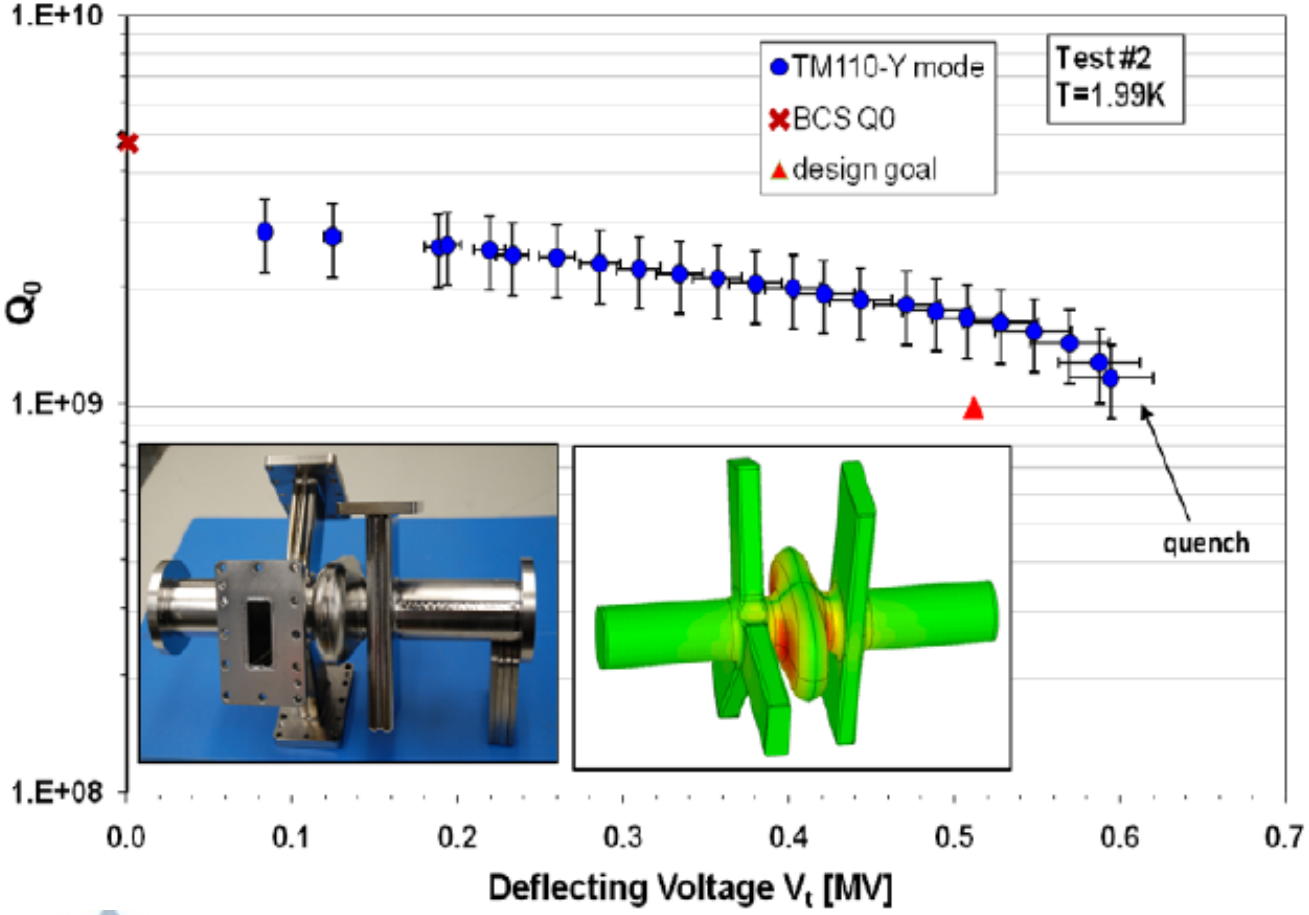

# SPX – QMiR SRF Cavity

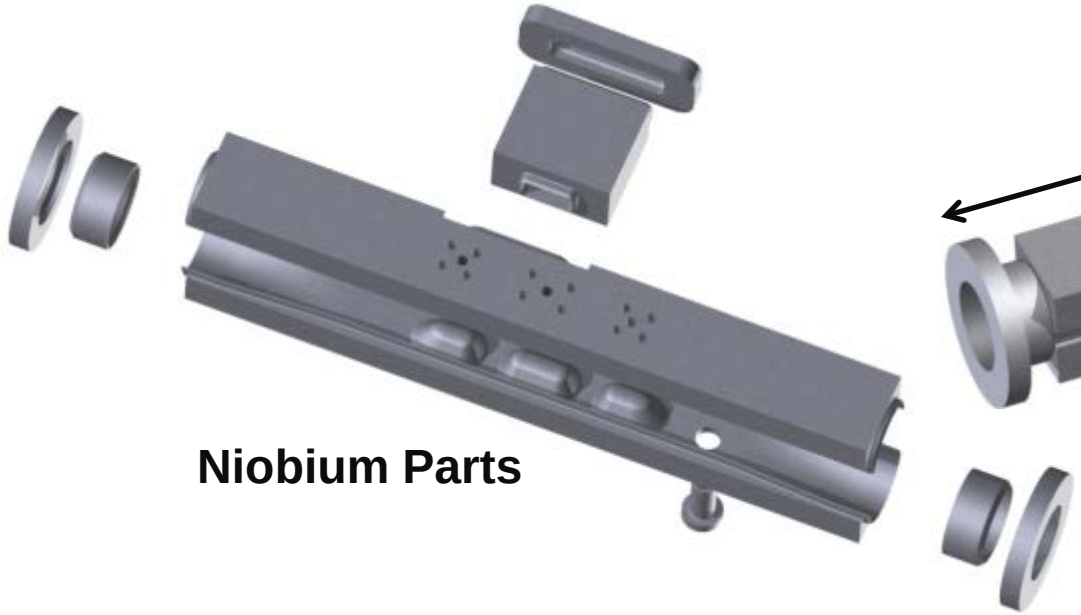


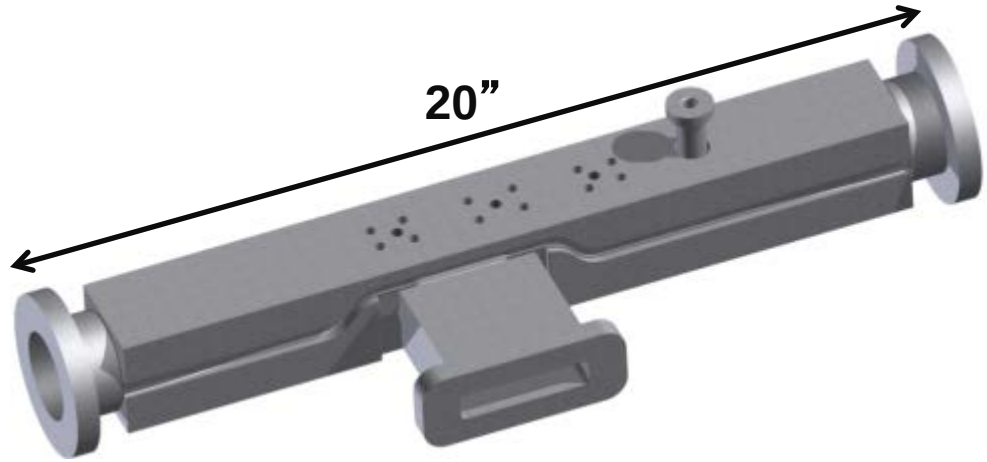


- ANL-APS/ANL-PHY/ FNAL designed a simpler cavity
- Cavity fabrication by ANL-PHY.
- Prototype fall 2013
- Total project cost <5 times the current baseline design.

| Cavity Type | Squeezed Elliptical Cell | Quasi-Waveguide Multi-cell Resonator |
|---|---|---|
| Frequency (MHz) | 2815 | 2815 |
| $V_{kick}$ (MV) | 0.5 | 2 |
| $E_{peak}$ (MV/m) | 42 | 54 |
| $B_{peak}$ (mT) | 100 | 75 |
| $(R/Q)_y = V^2_{Kick}/(2*P)$ ($\Omega$) | 19 | 521 |
| $G = R_{surface}*Q$ ($\Omega$) | 225 | 130 |
| # Required Cavities | 2 x 4 | 2 x 1 |

# Convergence of Low- and High-beta Superconducting RF cavities
# ANL has been at the center of this development for decades

Z. Conway talk

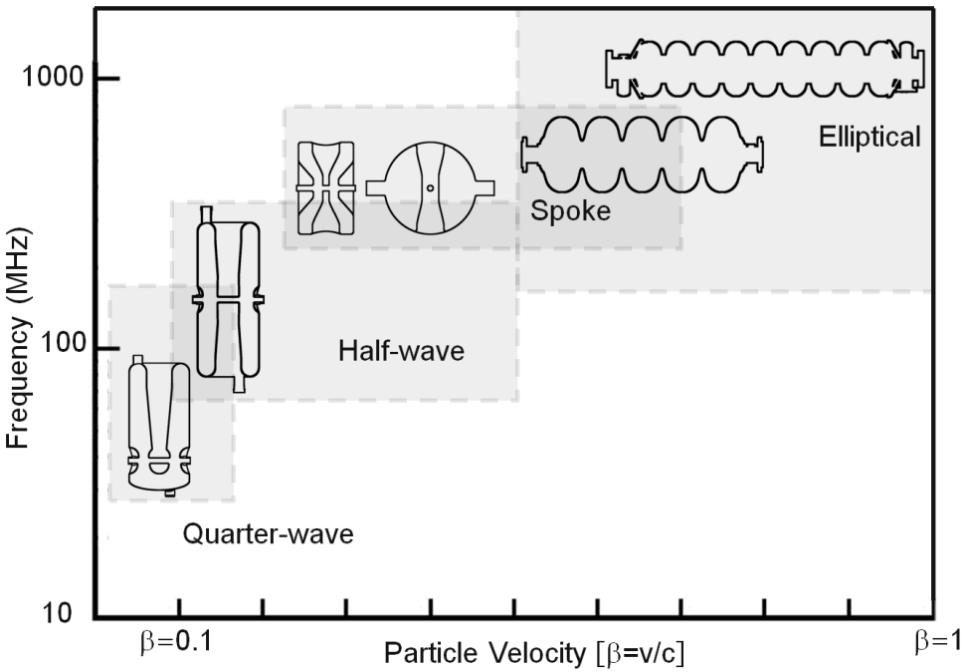


All bulk Nb

( PHY division expertise)

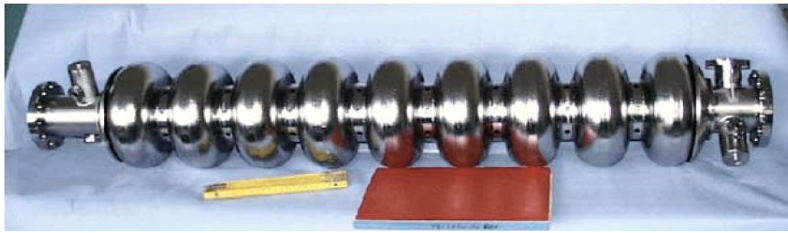

1.3 GHz β=1 ILC

345 MHz β=0.63 ANL

1st SC spoke

850 MHz β=0.28 ANL

97 MHz β=0.1 ANL

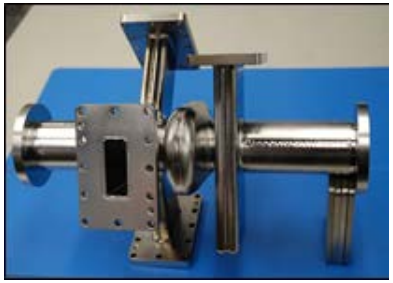

2.8 GHz β=1 (SPX)

Basic accelerator building block

- Recent convergence in SRF community; similar techniques now for all cavities
- ANL positioning for next generation of SRF cavities using **Atomic Layer Deposition**

# ANL/FNAL Collaboration on Cavity Processing

- ANL-PHY, ANL-HEP and FNAL have been collaborating since 2002 to improve SRF cavity processing.
- Demonstrated ILC 1.3 GHz cavity processing.
- Improved upon ILC Work to implement the worlds first low-beta cavity EP tool. This is similar to the ILC, but incorporates direct water cooling greatly improving polishing uniformity.
- For the first time: electro-polishing after all fabrication work is complete.

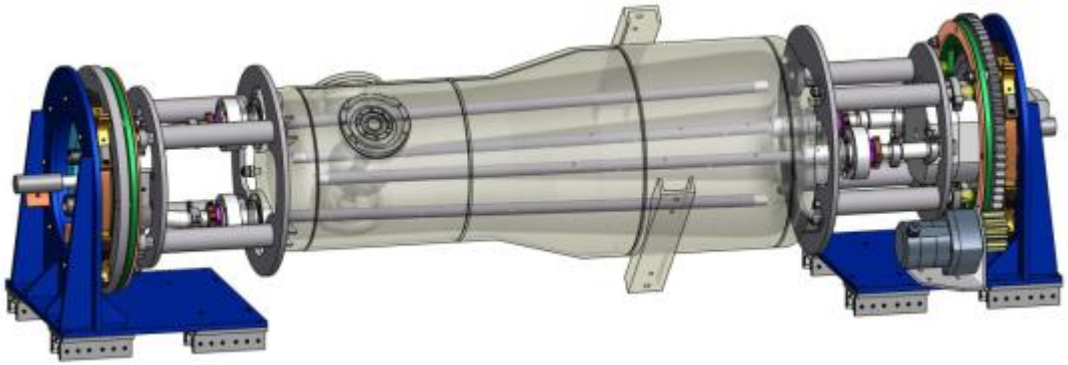

# ANL/FNAL Cavity Processing Facility

*1.3 GHz Cavity Electropolishing, 325 MHz BCP*

**Low-Beta Cavity Electropolishing**

**Low-Beta Cavity Cleaning**

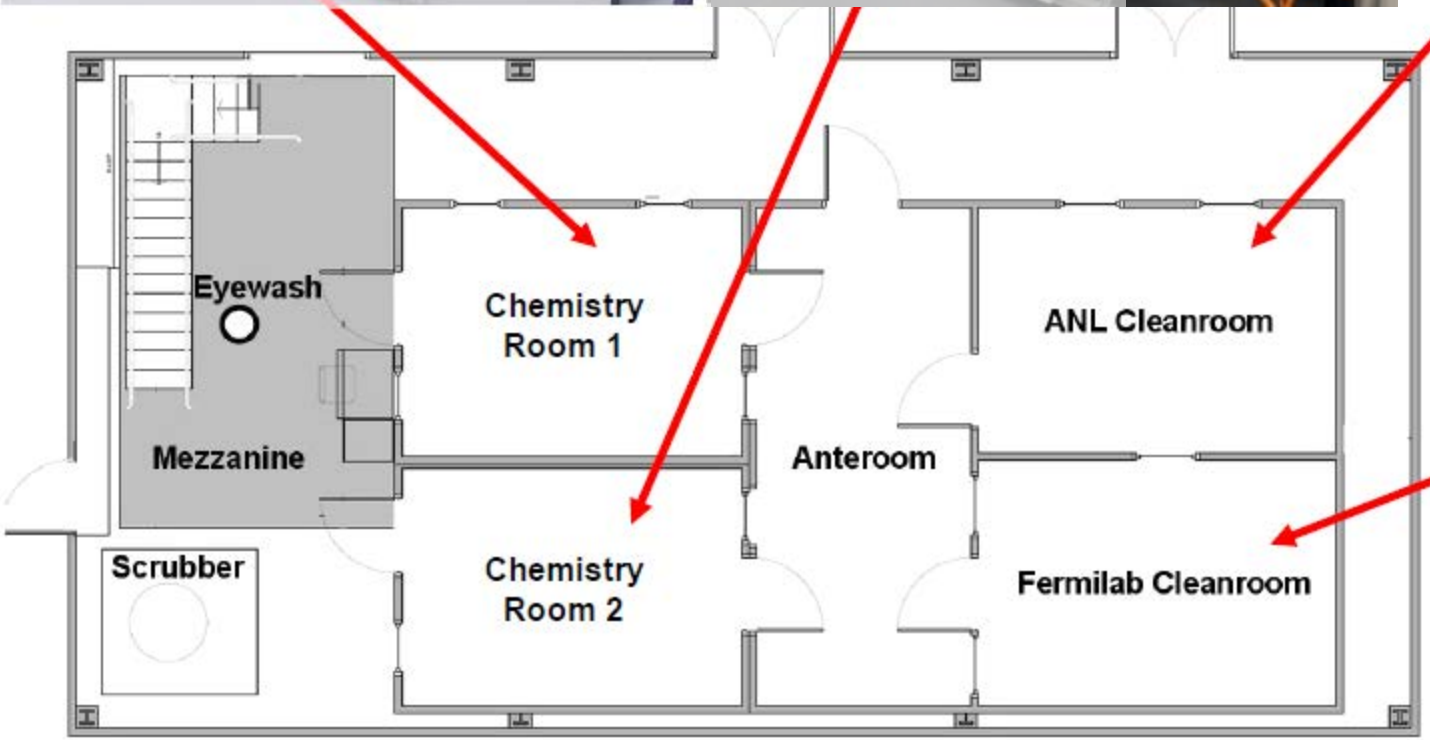

*1.3 GHz Cavity Rinsing/Assem*

**Built with ANL & FNAL support.**

# ILC/Project-X Cavity Processing

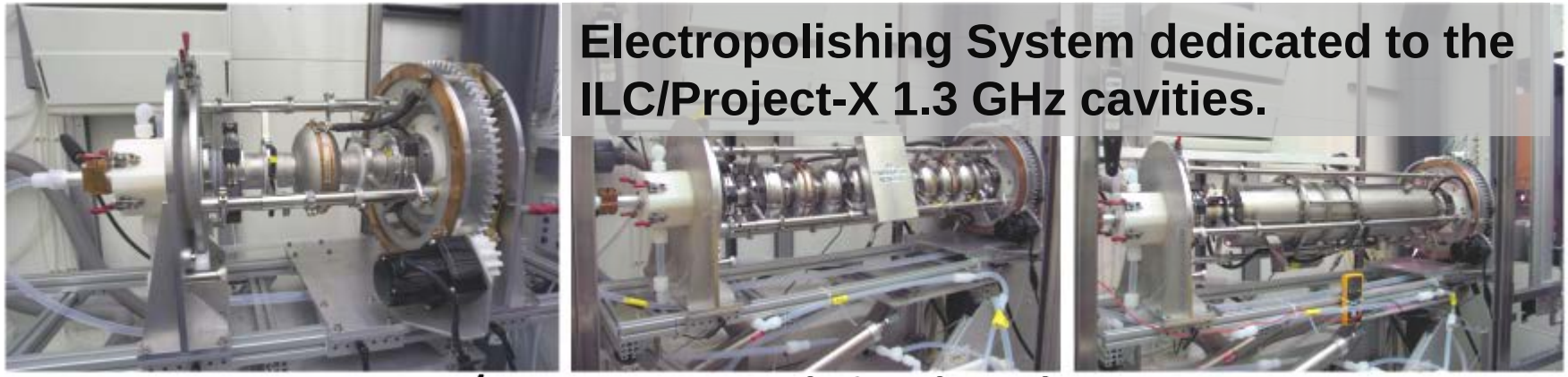


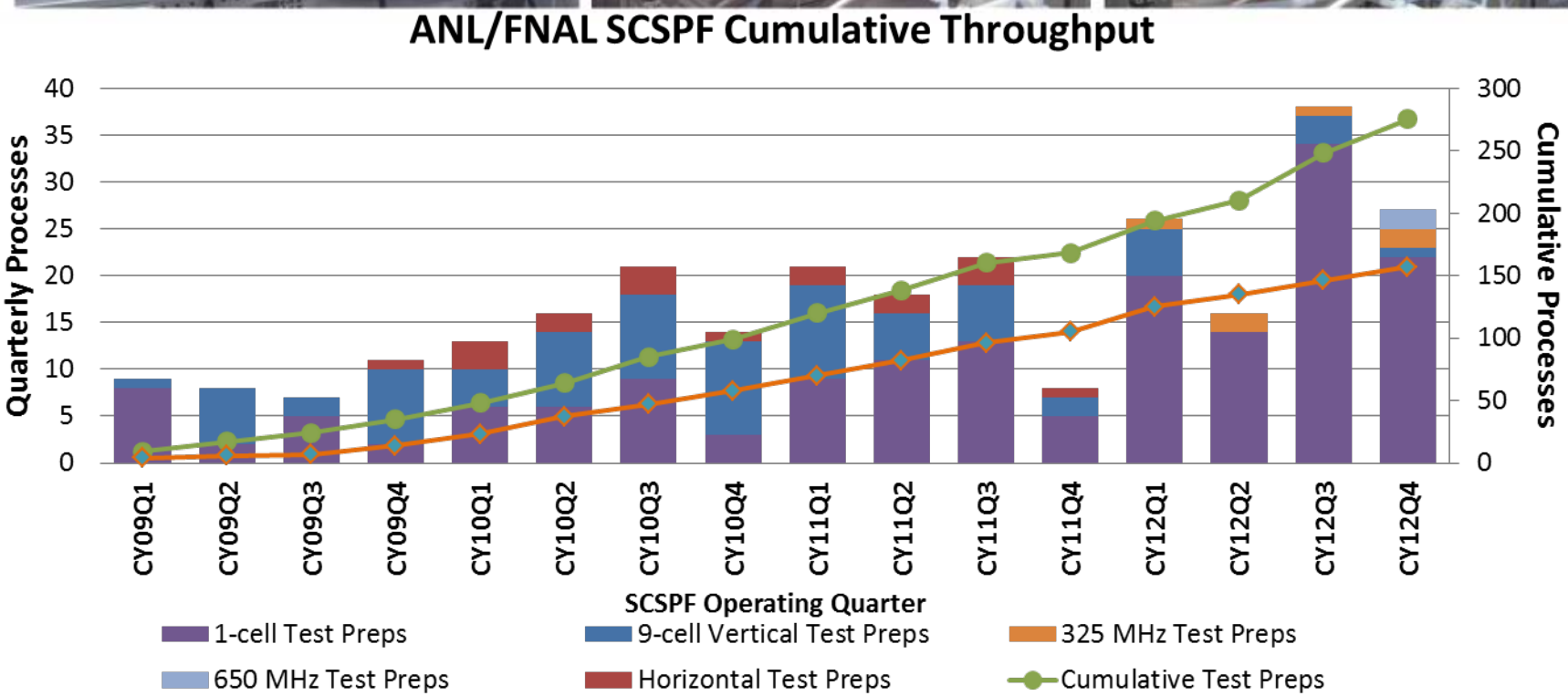


Staffed by 2 ANL-HEP engineers and 2 FNAL techs with ANL-PHY support.

# Recent FNAL SRF Results (Cavities Processed at ANL)

Buffered Chemical Polished Cavities

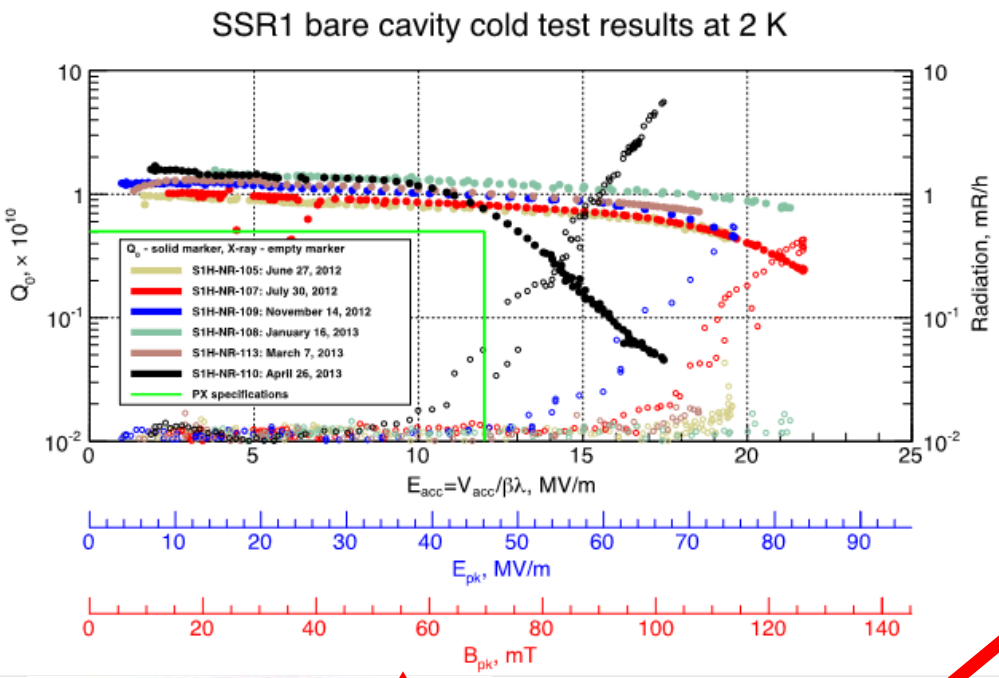


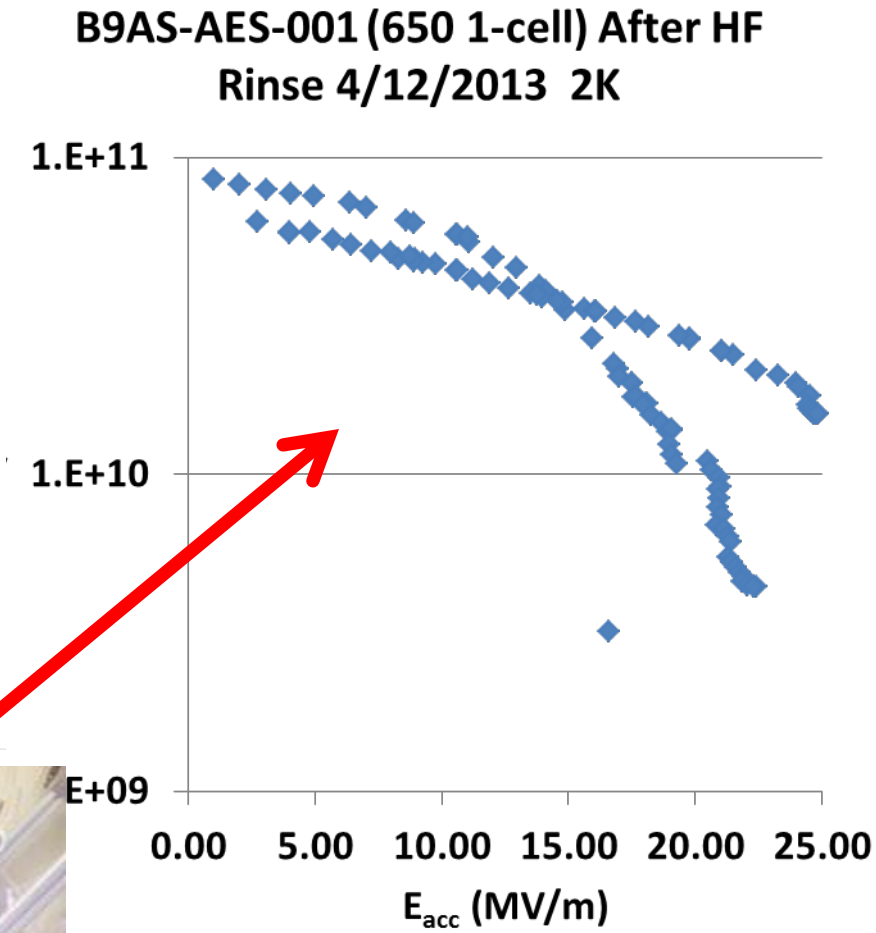

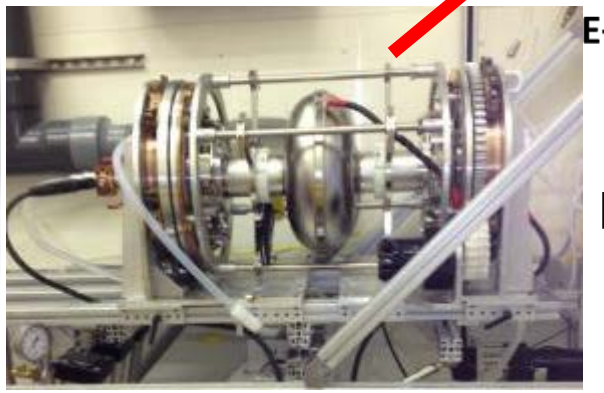

Electro-Polished Elliptical Cell Cavity (650 MHz, $\beta$ = 0.9)

Project-X Cavities Processed in the Joint ANL/FNAL Facility & tested at FNAL

# Project-X SRF Cryomodule Development

- One SRF cryomodule
  - Accelerate a 1-5 mA proton beam from 2.1 to 10 MeV.
  - 8 SRF half-wave resonators.
    - 162.5 MHz.
    - Beta = 0.11.
  - 8 Superconducting solenoid/steering coils.
- 2 prototype cavities ready this year funded by FNAL.

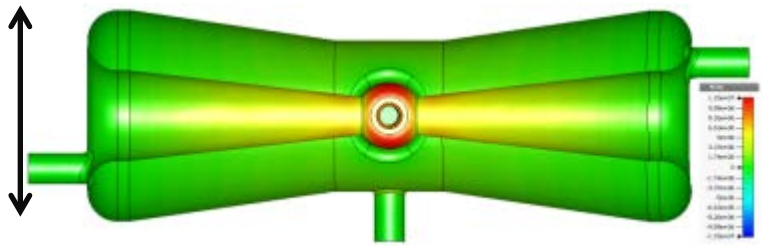


Surface $\vec{E}$ Field

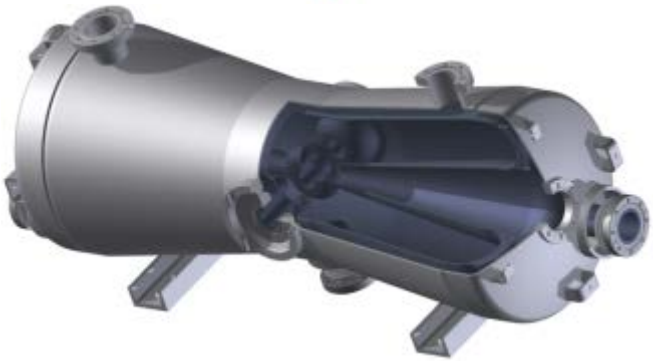

Cavity Mechanical Model

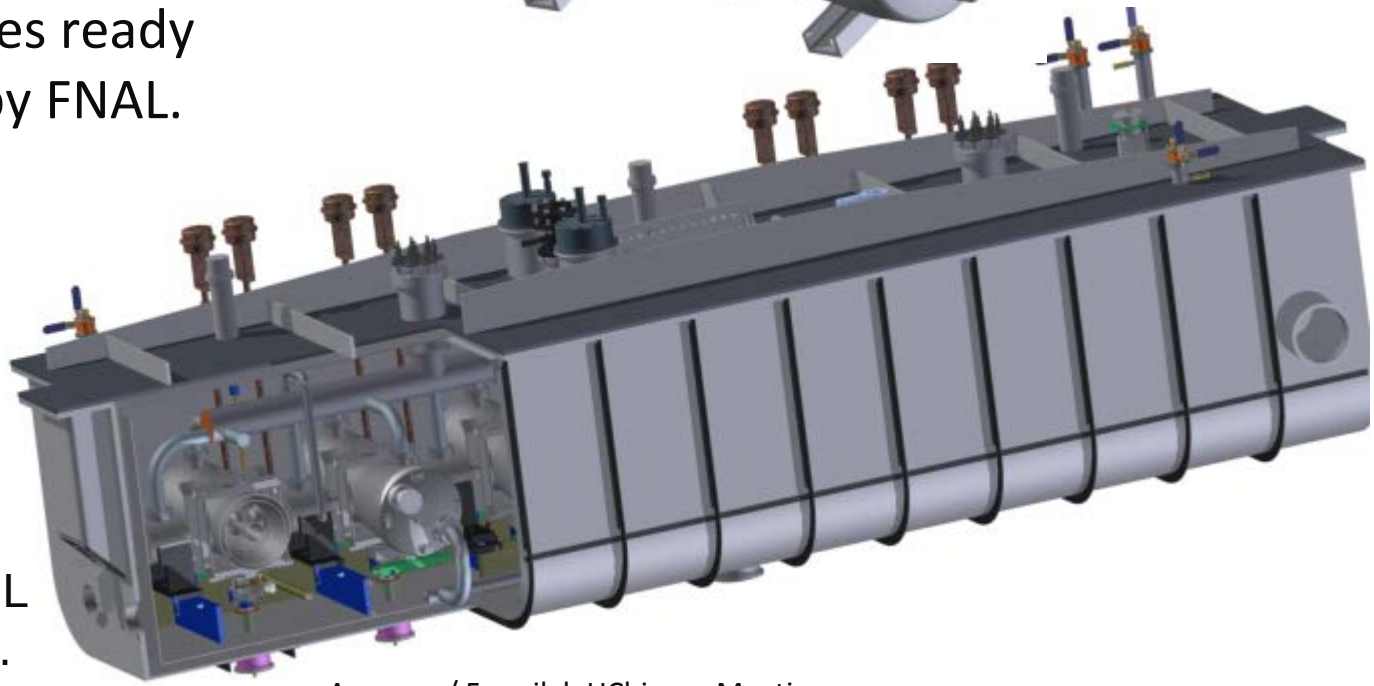

6 m long cryomodule
13.8 MV energy gain
-significant margin for operations.

Builds upon previous ANL cryomodules/experience.

# Project-X HWR Development – FNAL WFO

**162.5 MHz, β = 0.11, HWR Nb Parts Model**

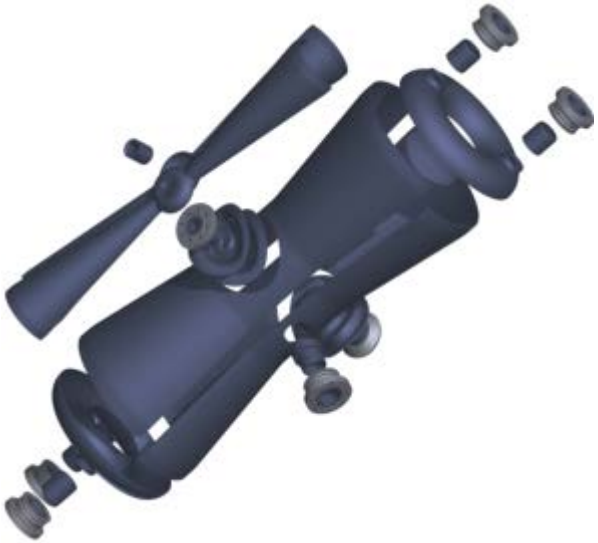

**Electric Discharge Machining of Toroid**

**The parts made in collaboration with 4 vendors.**

Prototype Cold Testing Late 2013

# SRF Cavities and Atomic Layer Deposition

- Goal: Synthesize better superconductor than Nb by ALD (T. Prolier ANL-HEP/MSD):
  - -NbTiN = 14K.
  - -SC/Dielectric multilayers for ultimate fields.
  - -Studying Higher $T_c$ samples: FeSeTe (30K), $MgB_2$ (40K).
- ALD coated SRF testing ongoing in PHY for cavities coated at ANL.

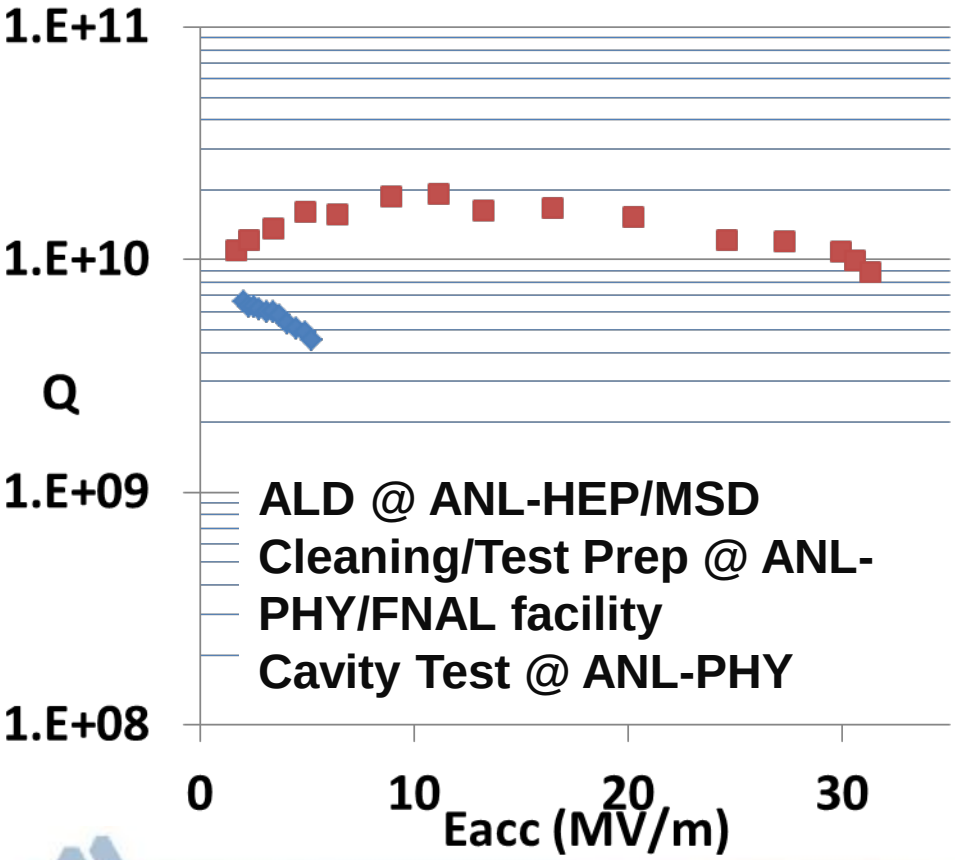


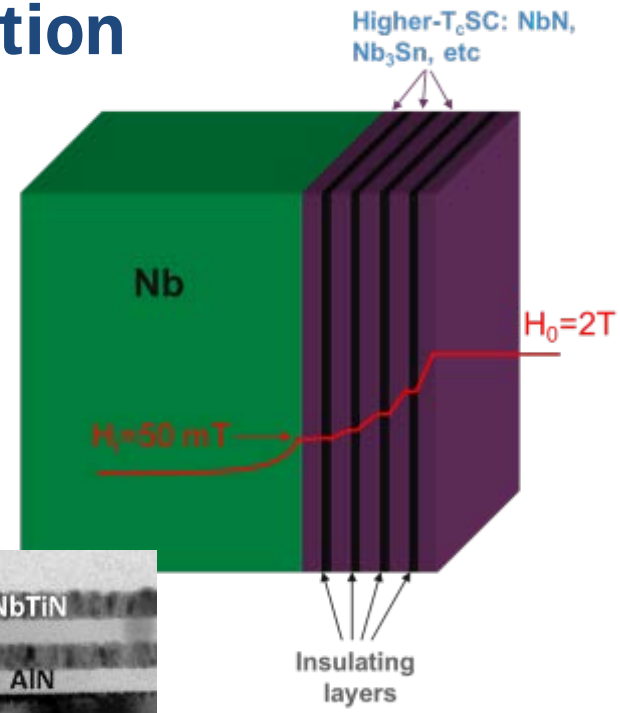


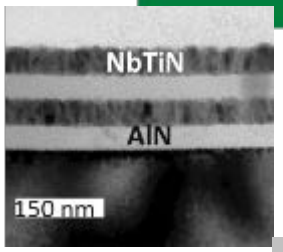


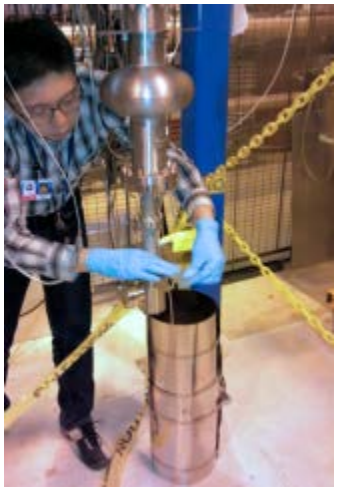

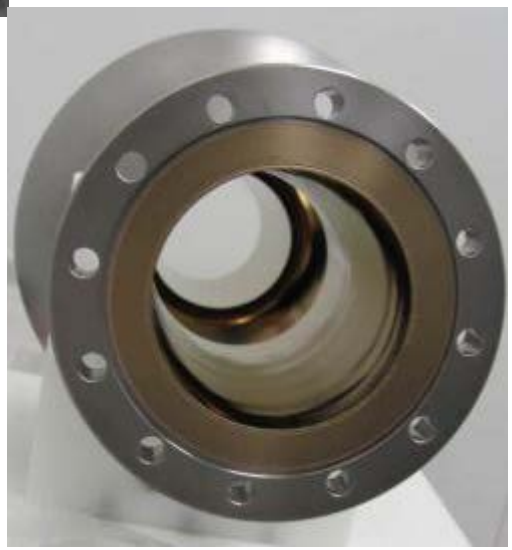

# What is Advanced Acceleration?

## The Quest for High Gradient Acceleration

- **Conventional/proven (E ~ 20 MV/m)**
  - Excited Media: Copper Cavities
  - Power Source: RF Klystron (amplifier)
- **Advanced ( > 100 MV/m )**
  - Excited media: Plasmas, Dielectrics, PBG, LHM, etc.
  - Power Source: Lasers and Electron Beams

*Argonne ➔*

*Beam Driven Dielectric Wakefield Acceleration*

*Primary Funding ➔*

*Office of High Energy Physics*

# Dielectric-Loaded Accelerator Structure

- *Simple geometry*
- *Capable of high gradients*
- *Easy dipole mode damping*
- *Tunable*
- *Inexpensive*

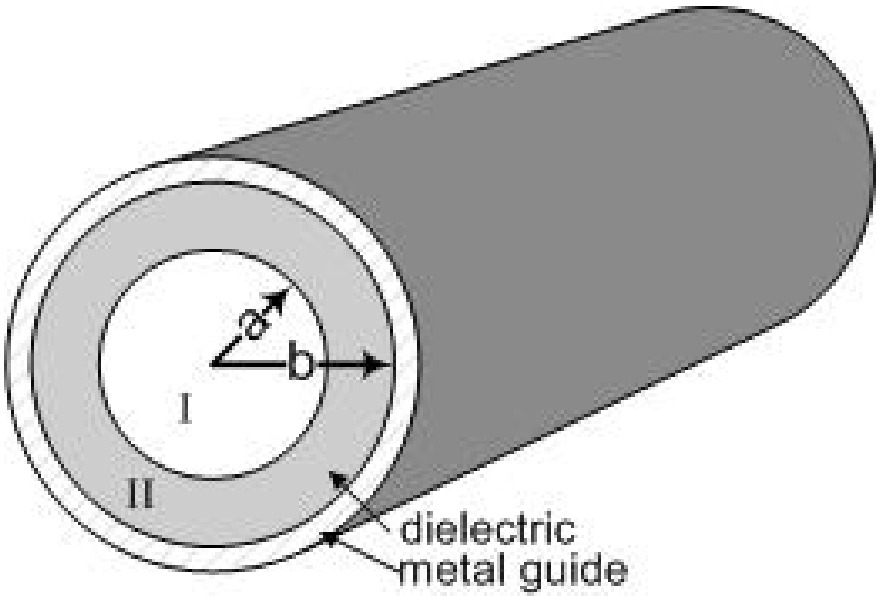


## Electric Field Vectors

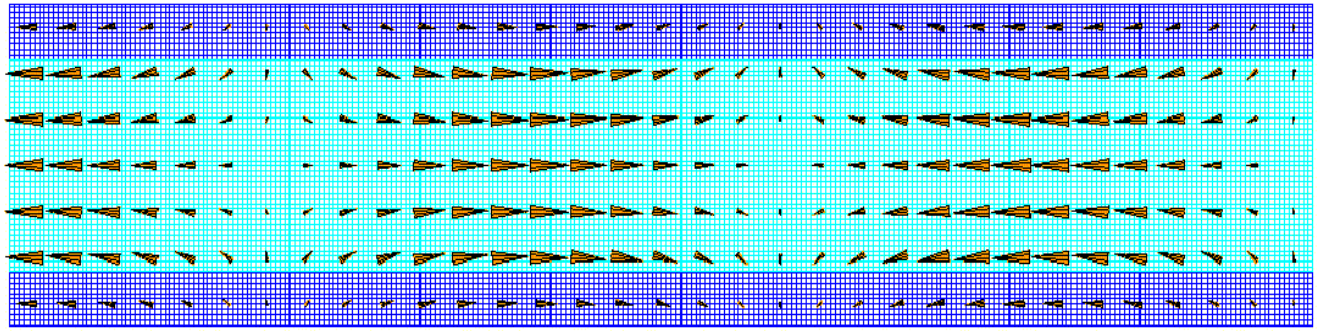

# Argonne Approach: **Flexible Linear Collider**

HEP

120 MV/m, 0.25 TeV, 4.5 km

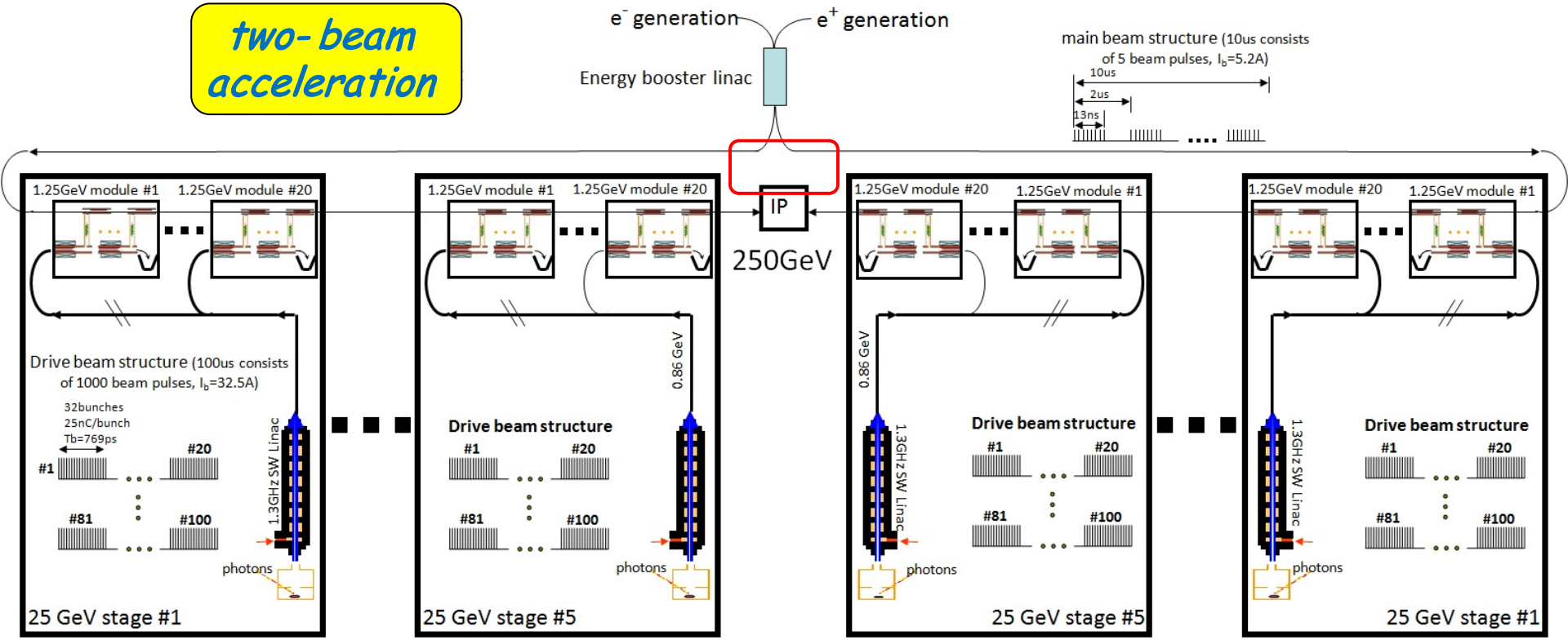


Higgs Factory

# 2. Multiuser X-ray FEL User Facility

BES

***Capable of serving ~2000 scientists/year***

(like 3rd generation light sources)

***Laser-like X-rays***

(like 4th generation light sources)

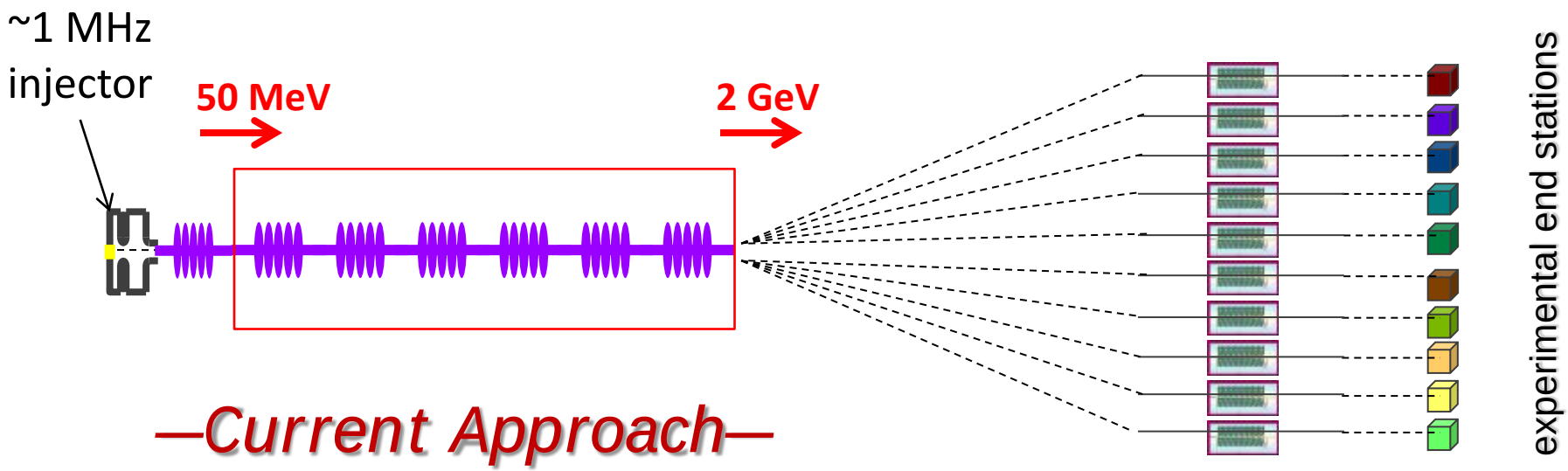


*—Current Approach—*
*superconducting RF*
*$$$*

**Flexible x-ray beamlines**
(Tunable pulse length, seeded, 2 color seeded, SASE)

# Argonne Approach **dielectric wakefield accelerating linacs**

BES

*Collinear wakefield acceleration*

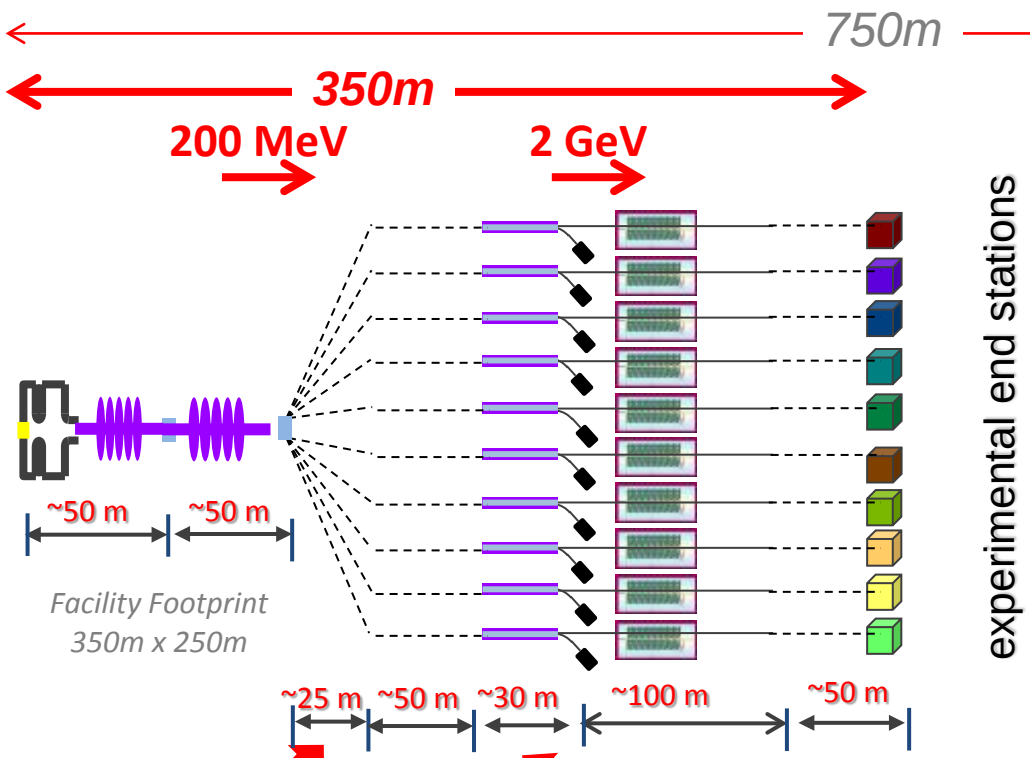


extremely low-cost alternative

3. Low Energy Beam Spreader

1. High Gradient (100 MV/m) DWFA linac
2. Room Temperature dielectric

# Main points

1. A 5th generation light source would revolutionize X-ray science.
   1. serves a large number of users (like 3rd generation light sources)
   2. produces laser-like coherent x-rays (like 4th generation light sources)

2. Lost Cost alternative based on dielectric wakefield accelerator (DWFA) for XFEL
   1. replaces most of the SRF linac with room-temperature DWFA linacs;
   2. beam spreader is greatly simplified by moving it from 2.4 GeV down to 200 MeV
   3. facility footprint is much smaller due to the replacement of the low-gradient SRF linacs with high-gradient DWFA linacs.

# Positron source study for ILC ( responsible in GDE)

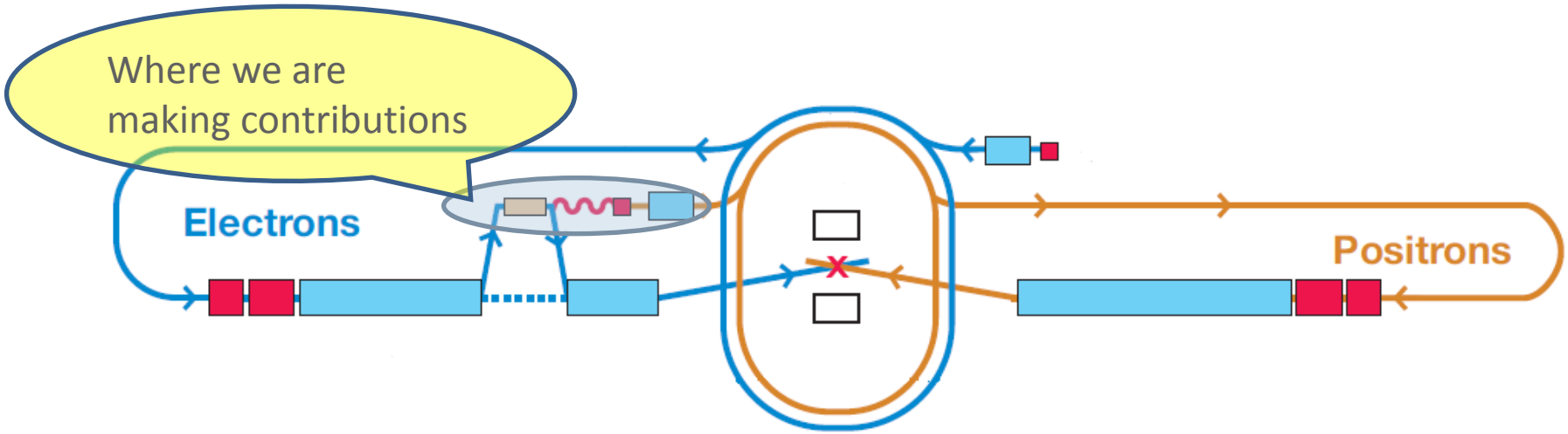


- ANL responsible for
  - end to end simulation of ILC positron source: numerical model of undulator radiation; investigated and compared many different undulator parameters proposed by collaborators; the impact on yield for different OMD options
  - the energy deposition calculating in the targets (Ti, liquid pb).
  - **collaborating with KEK on their conventional e+ source scheme and compton scattering based e+ source.**
  - emittance evolution of drive electron beam passing through undulator.

- Currently working on undulator parameters for Minimum Machine option.

# Accelerator Stewardship

- With Fermilab, continued investment in education through Lee Teng Internship Program
- Involved in SC stewardship initiative to identify high-efficiency alternatives to existing RF sources
- Hosting “Superconducting Particle Accelerator Forum of America” Board Meeting in June