Integration of the HWR Cryomodule with Project-X and PXIE

Speaker: Zack Conway
On Behalf of the ANL Physics Division Accelerator R&D Group
October 15, 2013

Overview

- What are the cryomodule integration issues:
  - Cryomodule size and weight.
  - Where is the cryomodule going?
    - PXIE test area.
    - Defined by FNAL.
  - What connects to the cryomodule?
    - Cryogenics.
    - Penetrations.
    - Vacuum.
    - Instrumentation.
  - What requirements does the cryomodule have?
    - Pressure relief.
    - Alignment.

- Outstanding Q/A issues.

Cryomodule

HWR Cryomodule

Parameter	Value
Lid Weight	6,500 lbs
Box Weight	8,900 lbs
Cold Mass Weight	7,100 lbs
Total Weight	22,500 lbs

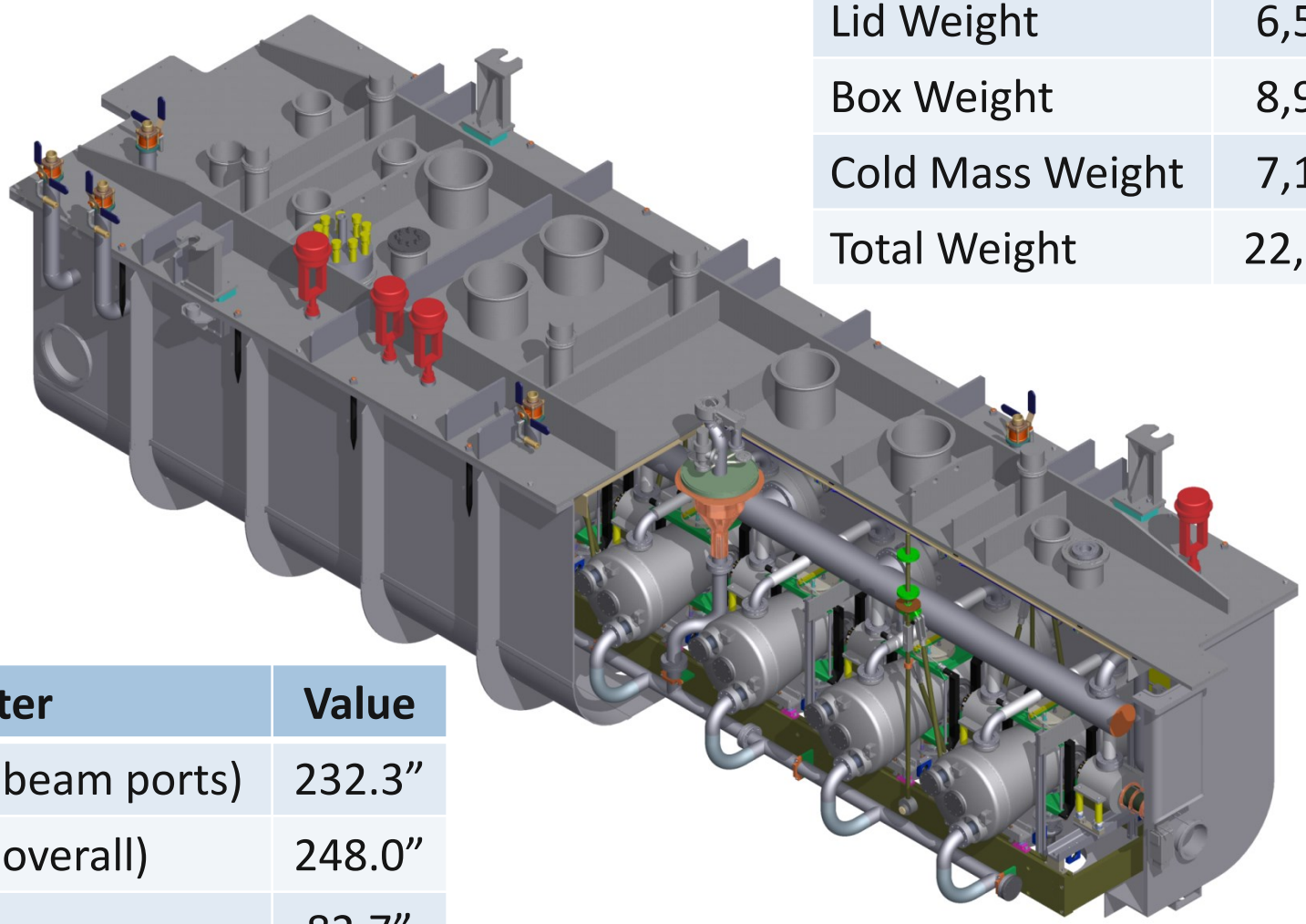

Parameter	Value
Length (beam ports)	232.3”
Length (overall)	248.0”
Width	82.7”
Height	86.6”

Cryomodule Location

PXIE Test Facility

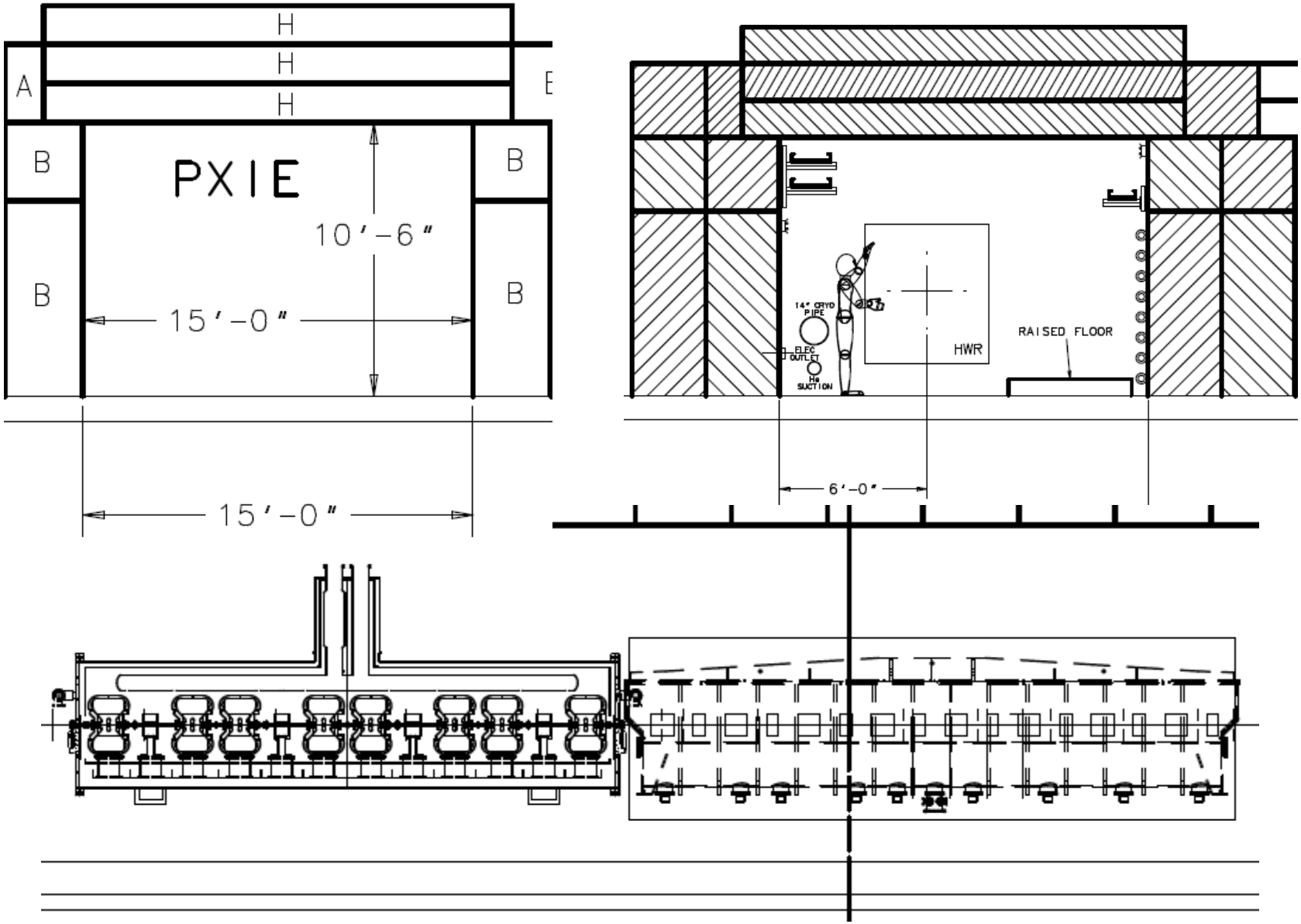

PXIE Test Facility

- Major design constraint beam height = 51.181” (1.3 m).
  - Ceiling height = 126”.
- The cryogenic bayonets must be inserted/removed with the ceiling blocks in place.
- Our design satisfies this and cryomodule connections are the next topic.

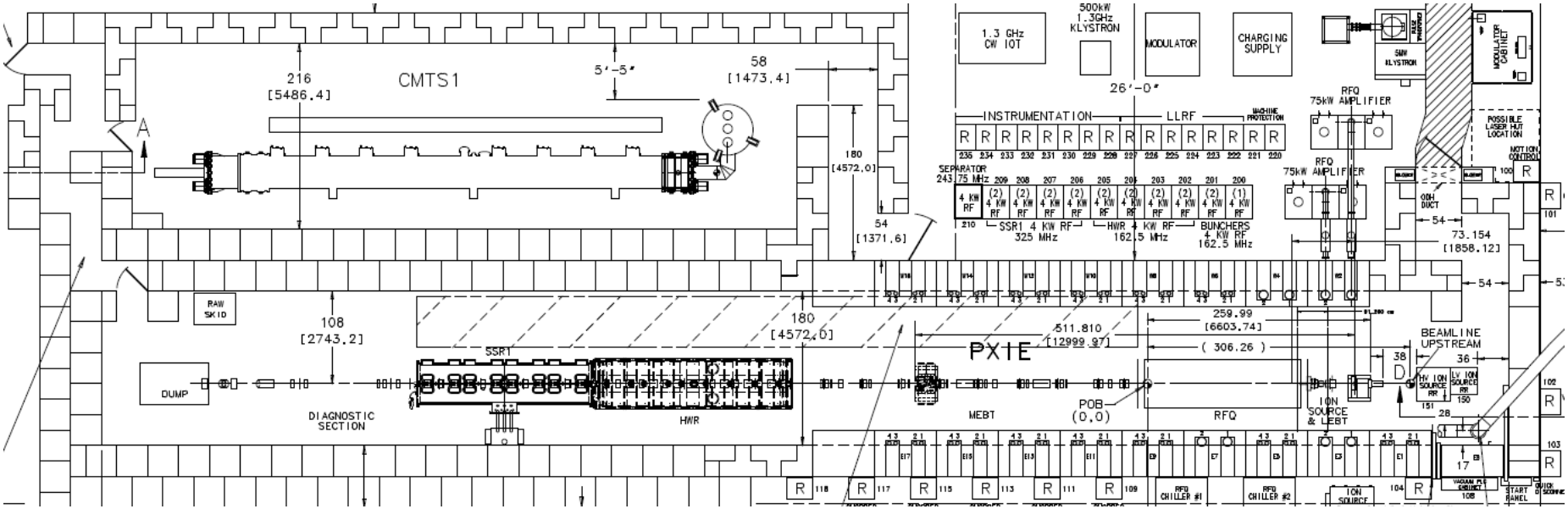

Cryomodule Connections

HWR Cryomodule Requirements

- Interfaces:
  - Bayonet connections for Helium supply/return.
  - Cryogenic valve control system & connections.
  - Pumping/pressure relief connections.
  - Cryomodule positioning and alignment.
  - Beam ports terminated with a low-particulate vacuum valve.
  - RF inputs to power couplers and pick-up probes.
  - Instrumentation connections (including BPM signals).
  - Magnet lead connectors (solenoids & correctors).
  - Alignment fiducials on the cryomodule referenced to cavities.

- Instrumentation:
  - Beam position monitors (BPM).
  - Temperature sensors (couplers, magnets, cavities, etc.).
  - Heaters (magnets, cavities, etc.).
  - Helium system (pressure taps, liquid level probes, temperature sensors and heater).
  - Vacuum monitoring for both cavity/cryomodule systems.

Cryomodule Lid Penetrations

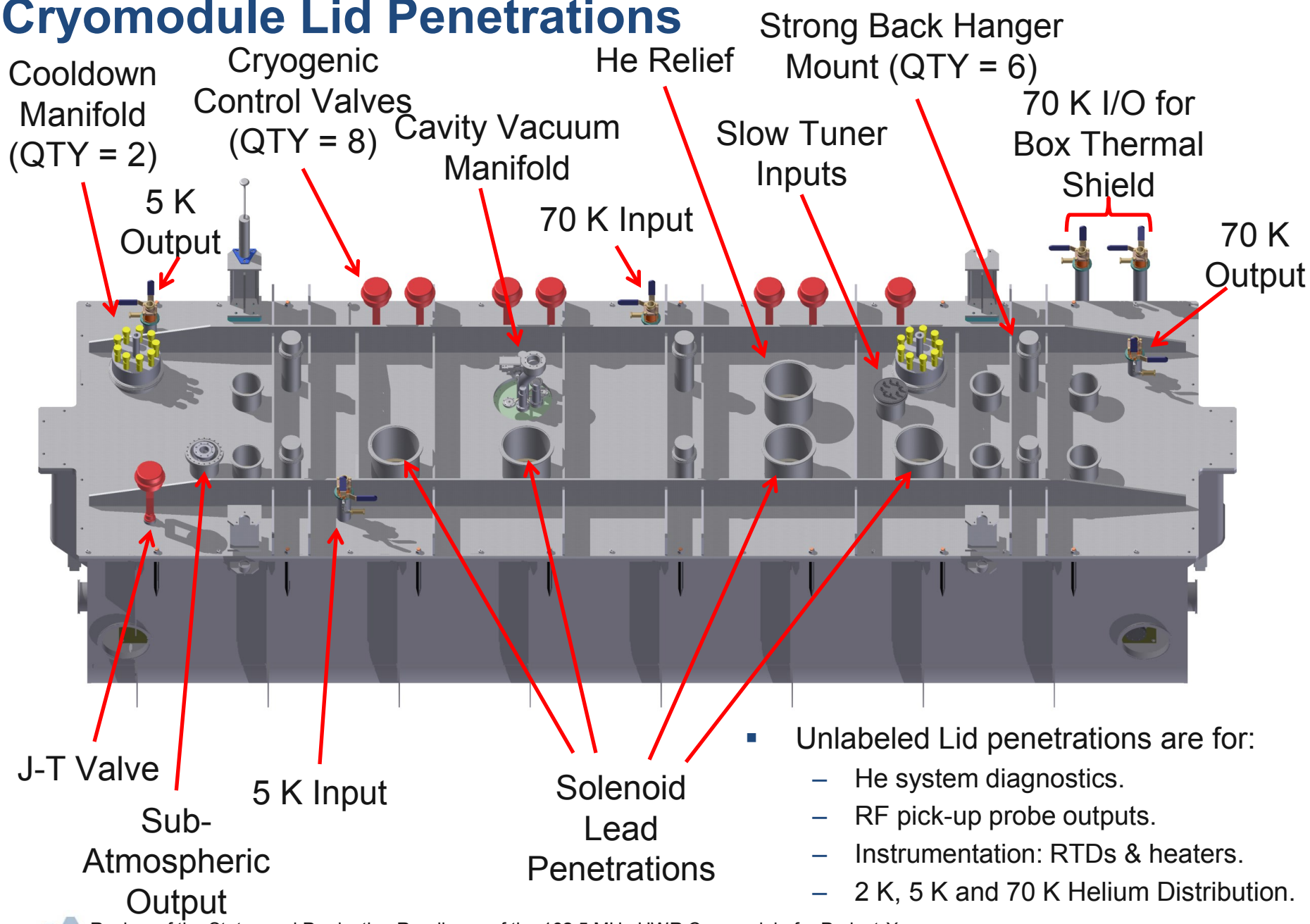

- Unlabeled Lid penetrations are for:
  - He system diagnostics.
  - RF pick-up probe outputs.
  - Instrumentation: RTDs & heaters.
  - 2 K, 5 K and 70 K Helium Distribution.

Cryomodule He Bayonets

Height	Standard FNAL Bayonet	Sub-Atmospheric Bayonet
Floor-to-Beam Line	51.2”	51.2”
Beam Line-to-Insert	39.5”	41.5”
Insert-to-Ceiling	35.3”	33.3”

Bayonet height needs to allow transfer lines to be inserted/removed with the ceiling blocks in place.

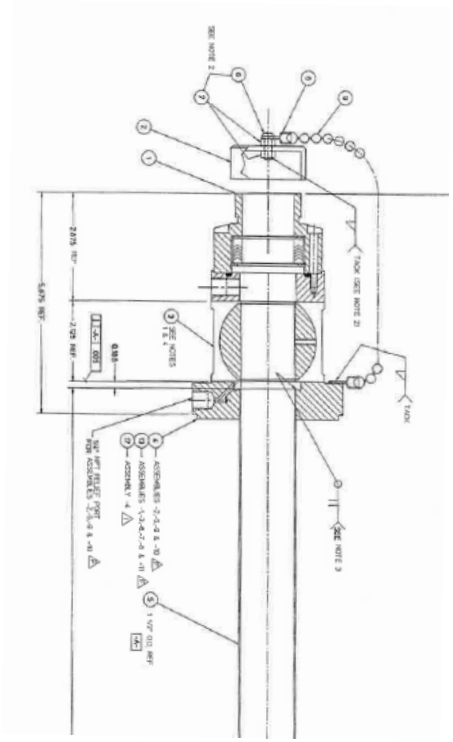

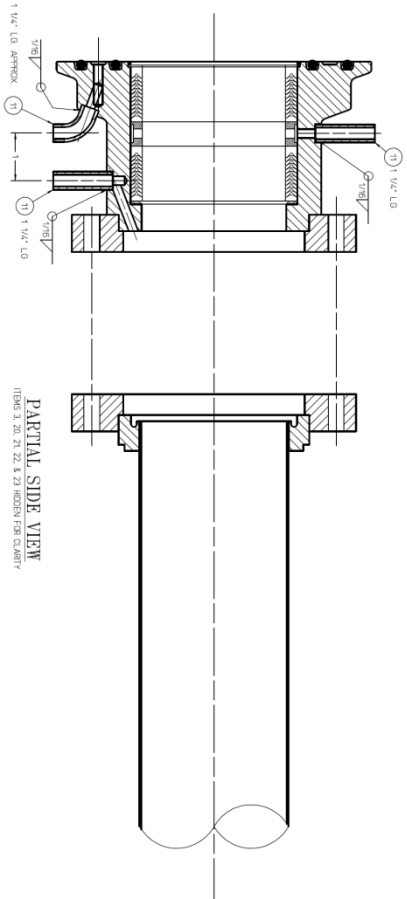

Cryogenic Control Valves

- There are QTY = 8 WEKA cryogenic valves.
  - QTY = 1 for the 2 K helium system.
    - J-T Valve.
  - QTY = 4 for the 5 K helium system.
    - J-T bypass valve for cooldown.
    - Coupler 5 K intercepts.
    - Beam line gate valve 5 K intercepts.
    - Cryogenic valve intercepts.
  - QTY = 3 for the 70 K helium system.
    - Lid/box heat shields.
    - Coupler 70 K intercepts.
    - Cryogenic valve intercepts & slow tuner He gas HTXG.

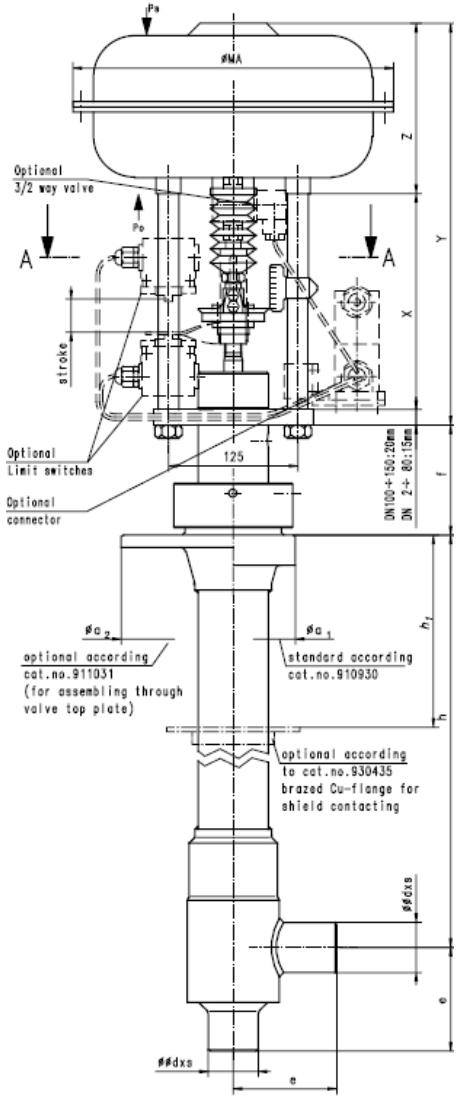

- These valves are commercially available and can be bought in multiple different configurations.

He Relief

- The helium manifold (6” Pipe) is relieved via a 4” line, pressure drop in this area < 1 psi during vent.
- FNAL has requested a check valve be added.
- M. White (FNAL) has identified solutions and they can be fit into the cryomodule.

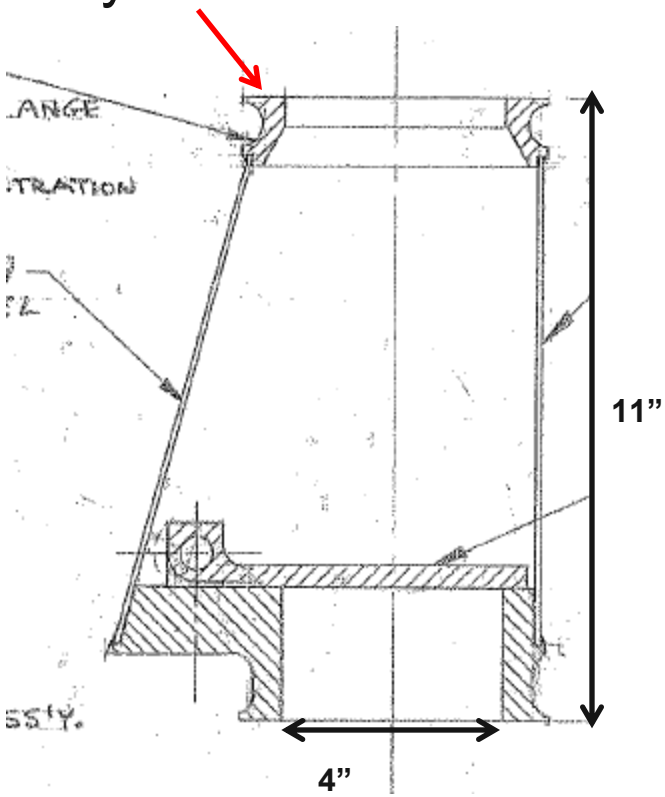

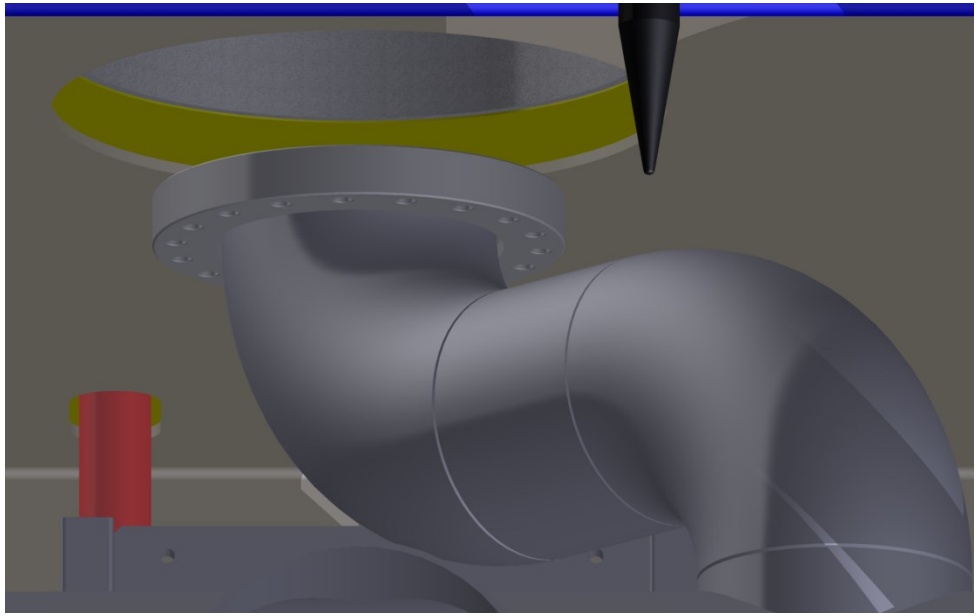

Solenoid Conduction Cooled Leads

HWR Cryomodule

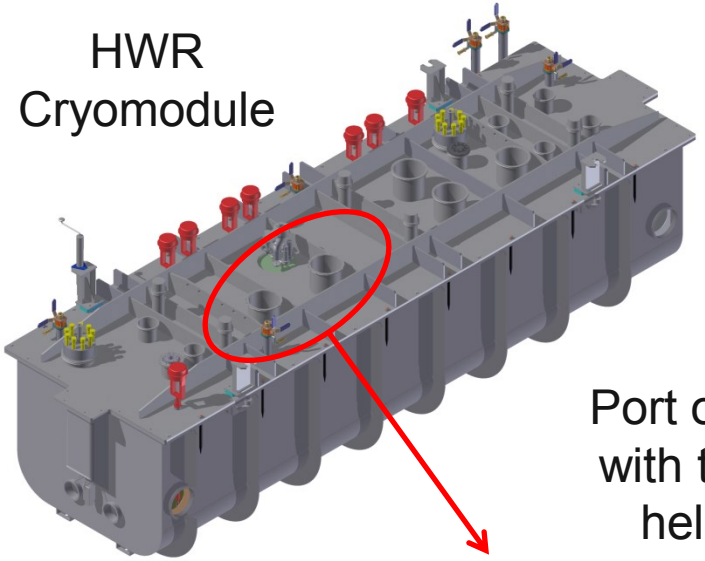

Port on the lid line up with the ports on the helium manifold.

There are 4 9.75” ID ports to fit the 48 solenoid leads

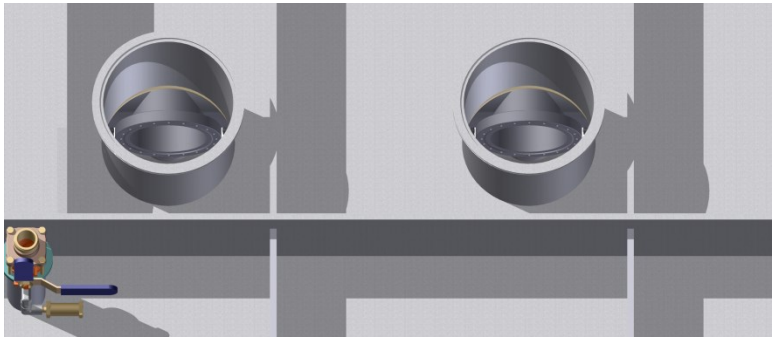

SSR Cryomodule Lead Design

Picture courtesy of T. Nicol.

- To be supplied by FNAL.
- T. Nicols has designed the layout to fit the HWR cryomodule.
- Improved/modified version of the CERN design.

Cryomodule Side View

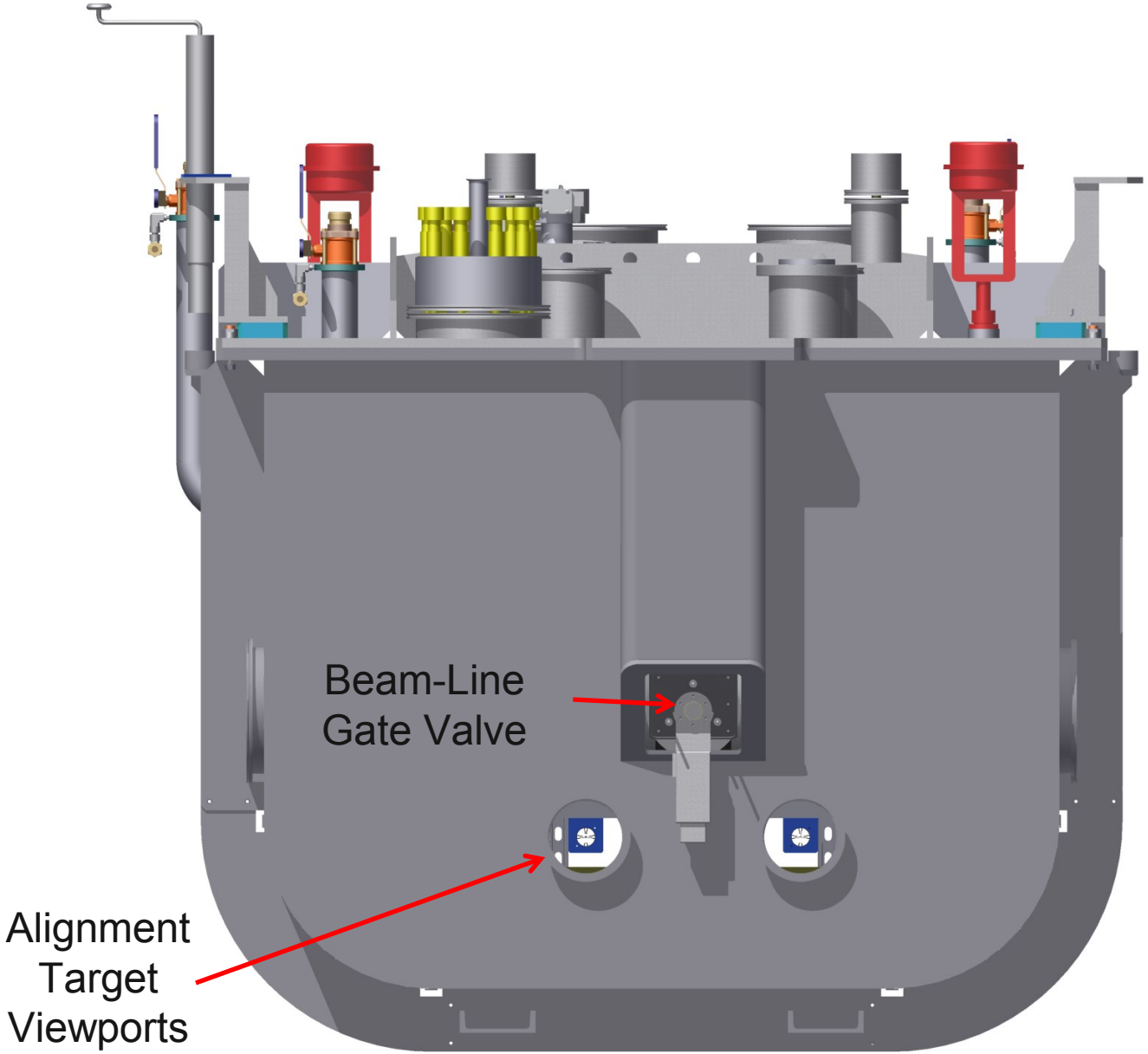

Cryomodule Bottom View

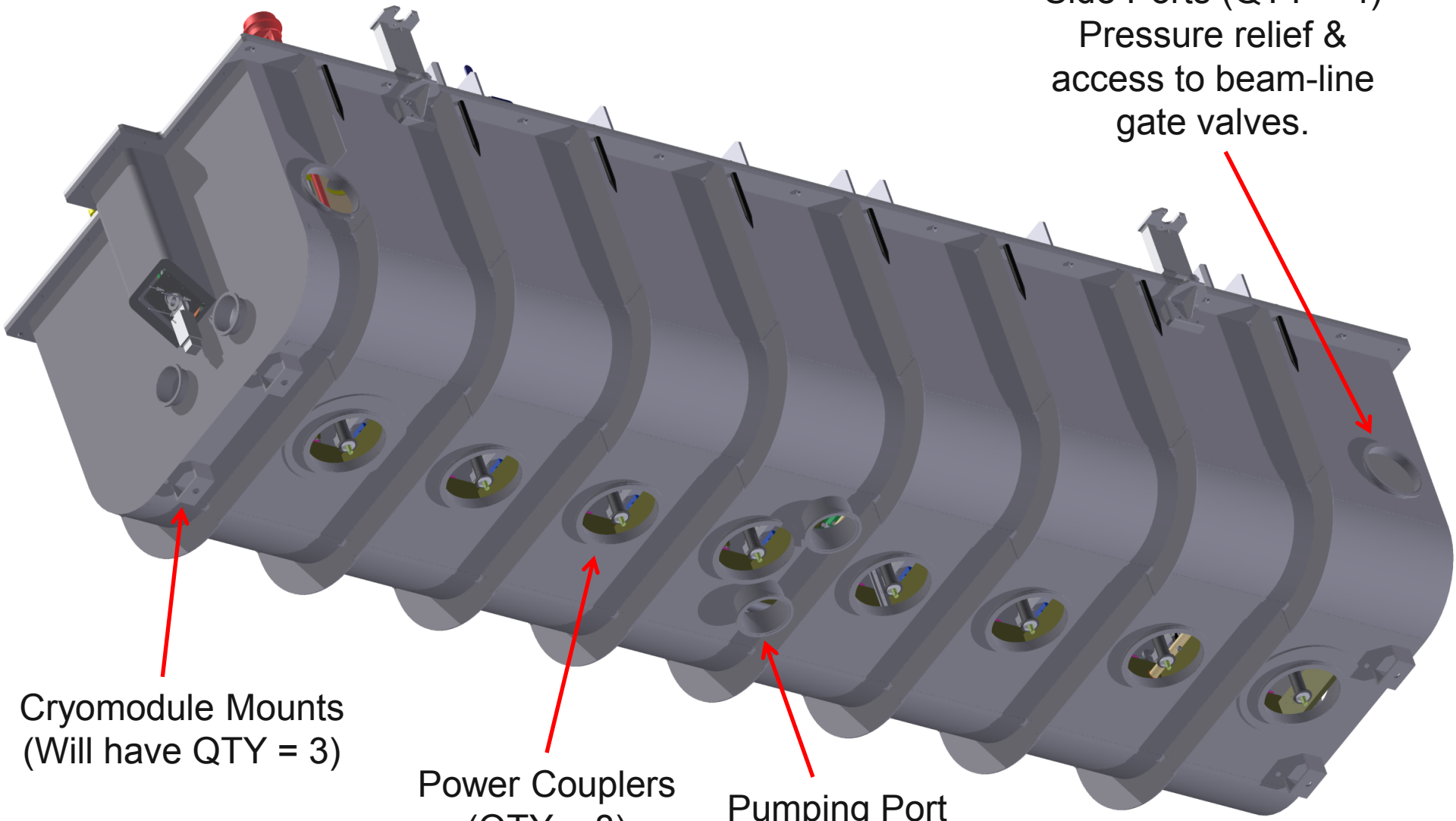

Instrumentation - Overview

- The helium space will have:
  - Per FNAL's request QTY = 4 tubes running from the 2 K manifold to R.T. supporting:
    - QTY = 2, liquid helium level probes.
    - QTY = 2, Absolute pressure transducers.
    - QTY = 1, Differential pressure transducer.
    - QTY = 1, Heater.
    - QTY = 2, Temperature sensors, Cernox RTD.
  - The solenoid/steering coil leads.

- In the insulating vacuum we will install:
  - Platinum RTDs on to be agreed upon 70 K surfaces.
  - Cernox RTDs on to be agreed upon 2 and 5 K surfaces.
  - Heaters on the:
    - Helium manifold.
    - Bottom of the cavities and solenoids.
    - On the HTXG low-pressure vapor input.
  - Redundant pressure transducers.

- The cavity vacuum manifold will be instrumented with redundant pressure transducers and provisions for a low-particulate mass flow controlled pump/up-to-air system.

Instrumentation - Comments

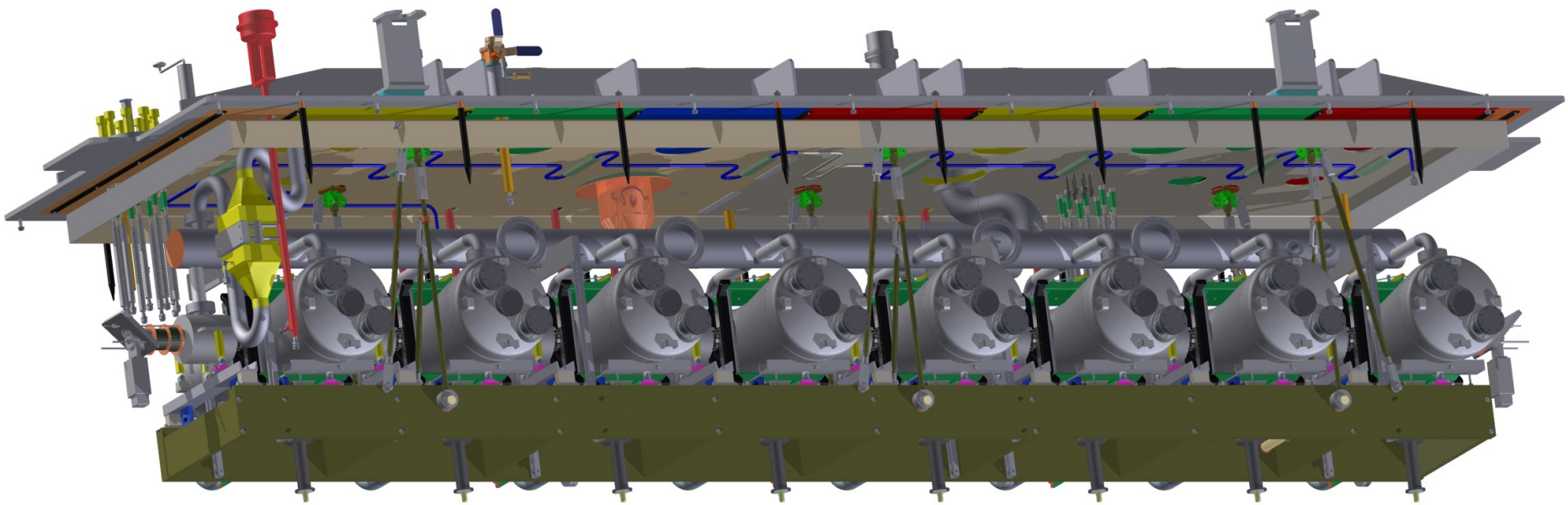

- Instrumentation quantities need to be agreed upon.
- Instrumentation locations need to be agreed upon.
- Much of this is already underway.
- Changes here do not change the design of the cryomodule.

Cryogenics

Estimate for the cryomodule only. Does not include cryogenic distribution system. E.g., transfer lines, external valve boxes, etc.

Previous Experience

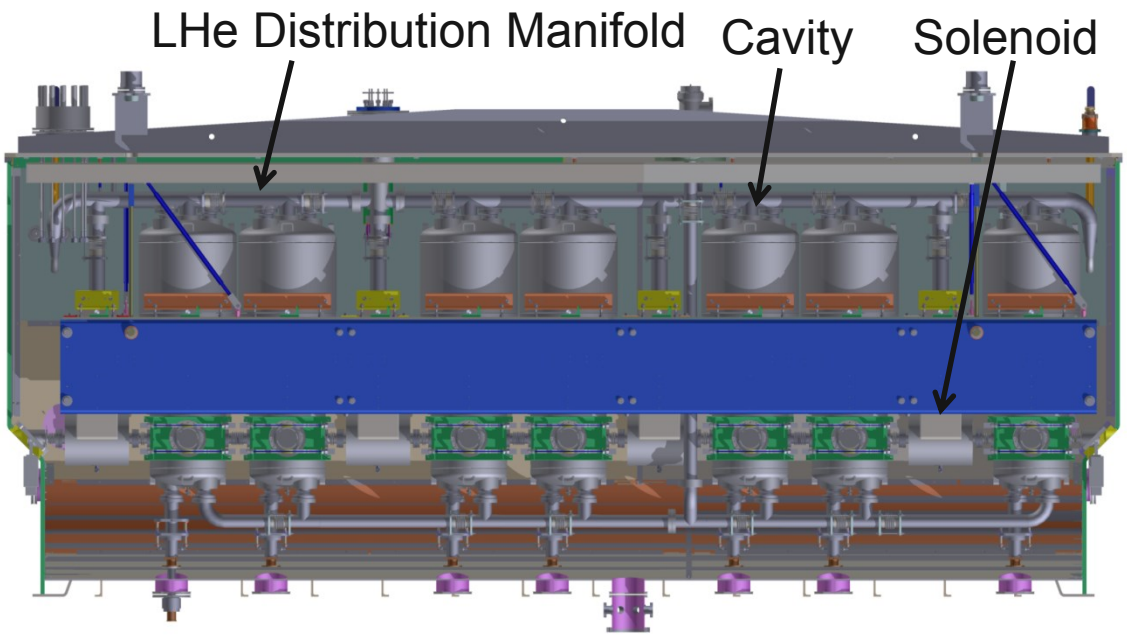

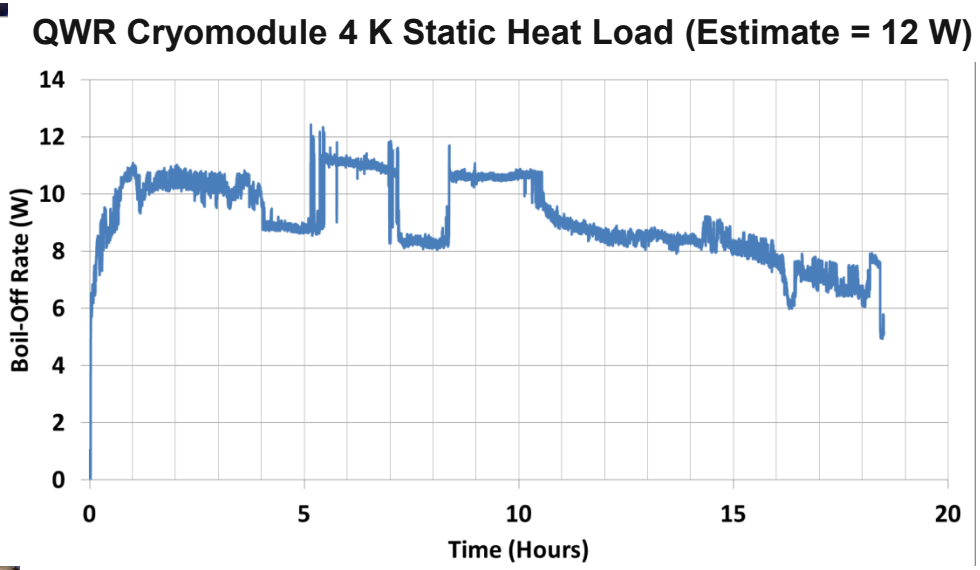

Cryomodule Heat Load Estimates I: 2 K

BCS Resistance	Residual Resistance
0.2 nΩ	6 nΩ

2 K Load = 38 W if 10 nΩ

Estimates are not padded.

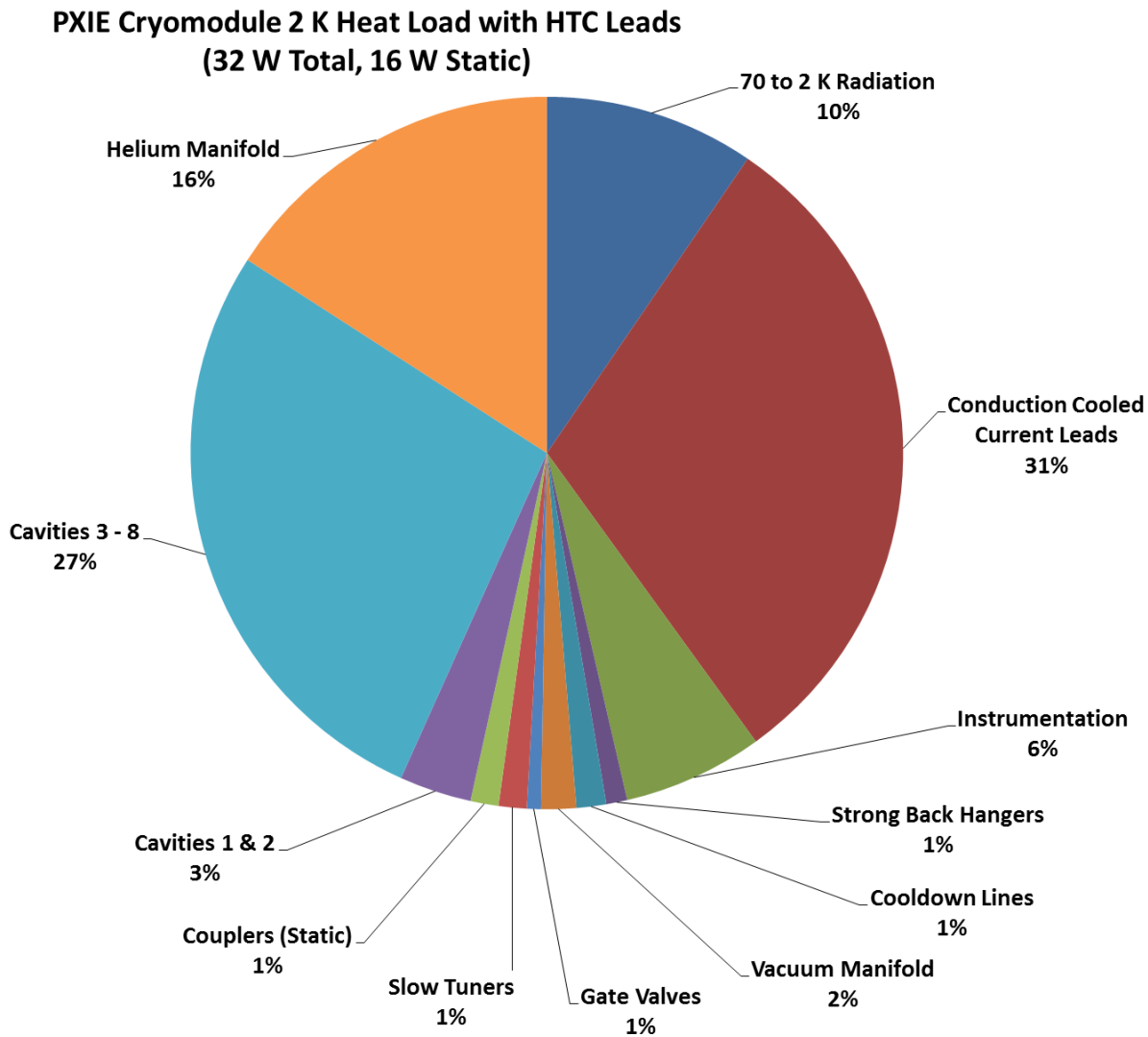

Cryomodule Heat Load Estimates II

Changed from HTC to conduction cooled solenoid leads.

Estimates vs. Functional Requirements

Load	Total	FNAL FRS
2 K	32 W	25 W
5 K	80 W	80 W
70 K	250 W	250 W

Constraint	FRS Convention
70 -2 K Radiation	0.1 W/m^2
70 – 5 K Radiation	0.1 W/m^2
293 – 70 K Radiation	1.5 W/m^2

Changing Operating Voltage

Parameter	Components	+20%	Design	–20%
Operating Set Point (MV)	Cavities # 1 & # 2	1.2	1.0	0.8
	Cavities # 3 - # 8	2.0	1.7	1.4
2 K Dynamic Heat Load (W)	Cavities # 1 & # 2	1.5	1.0	0.7
	Cavities # 3 - # 8	12.3	8.6	5.6
Total 2 K Load	**Everything**	**36**	**32**	**28**

Closing Remarks

- Alignment tolerances (status = good).
- Cryogenic loads (status = good).
- Space considerations (status = OK).
- Instrumentation connections (In progress).
  - What are favored connector types?
  - Can ANL specify this?
- Fabrication (Ready to start building, need to start the long lead time items ASAP).
  - Cryomodule.
  - Ti strong back.
  - Helium and vacuum manifolds.
  - Solenoids.
  - Couplers.
  - Slow tuners.
  - BPMs.
  - Slow tuner He gas HTXG.
  - Low-particulate beam line gate valves.
  - And much more.

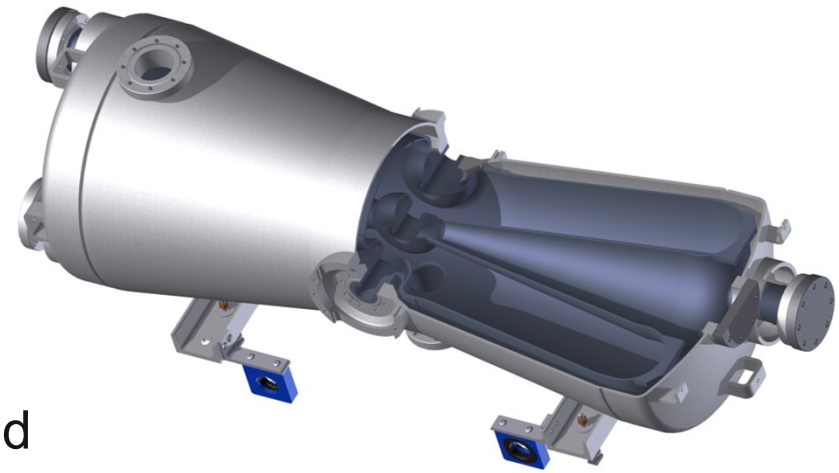

Cryogenic Loads

Load	Total	FNAL FRS
2 K	32 W	25 W
5 K	80 W	80 W
70 K	250 W	250 W

Instrumentation – FNAL PID & Description

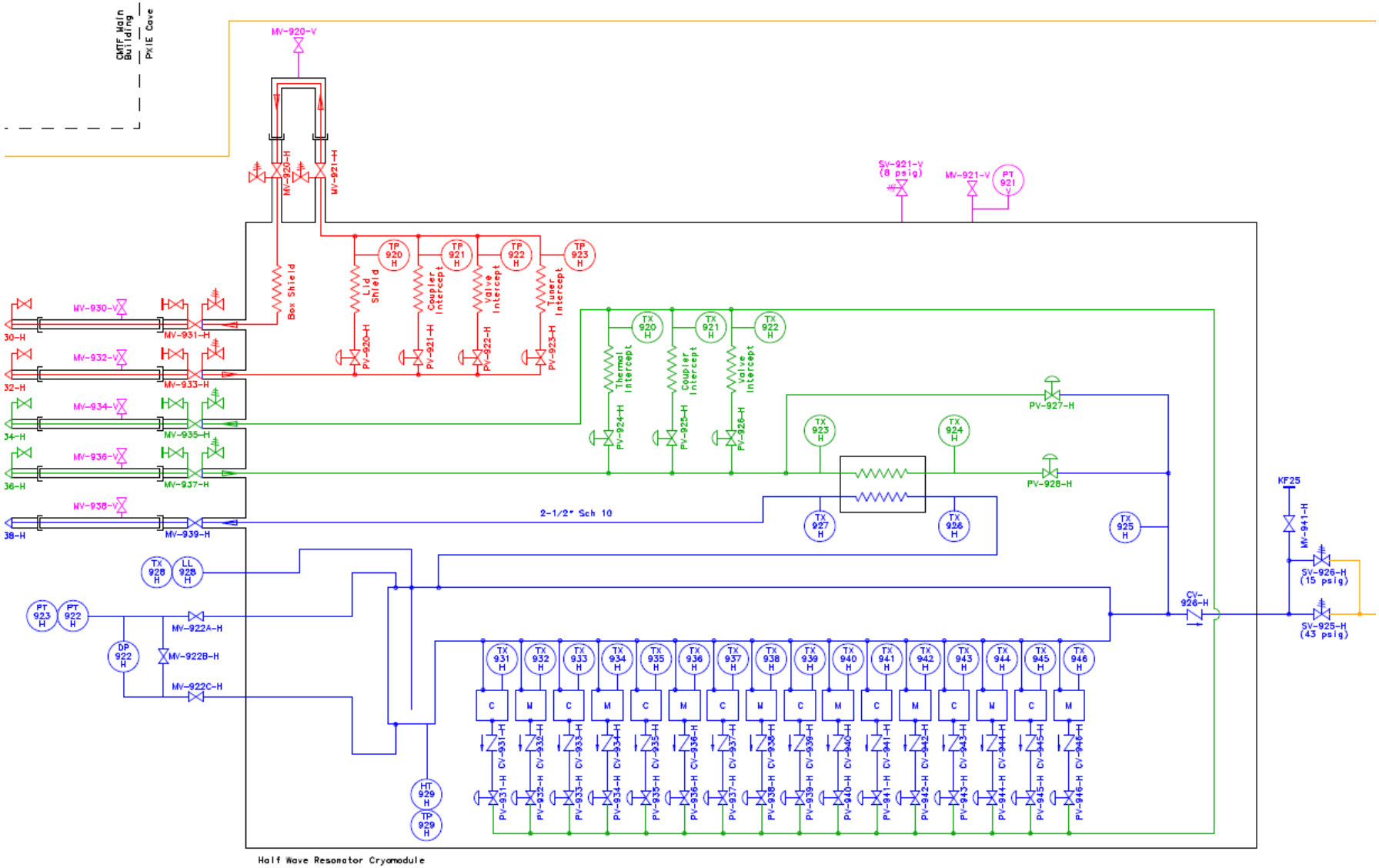

PID made by M. White (FNAL).