LLRF theory and vector control interaction with HOM signals

Brian Chase
Fermilab

ICFA Workshop on High Order Modes in Superconducting Cavities
July 13-16, 2014
Fermilab, Chicago

Outline

- LLRF basics
- Receivers, HOMs and the reasons for RF filters
- Questions from the LLRF perspective

The Goals of LLRF

- Control of beam parameters
  - through generation of cavity RF waveforms
  - tight, low noise regulation of the RF waveforms in cavities
    - we spend most of our efforts here working on controlling the fundamental
  - feedback to RF systems based on measurements of beam parameters
    - energy, arrival time, bunch length
  - Resonance control of cavities
    - mechanical displacement to control fundamental mode – no reason to believe HOMs will always track

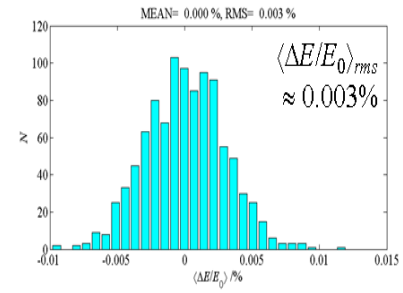

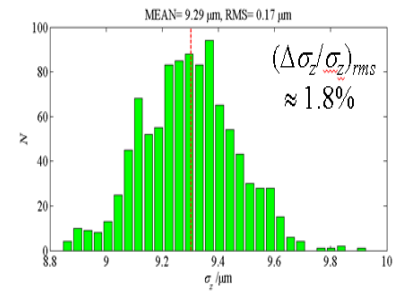

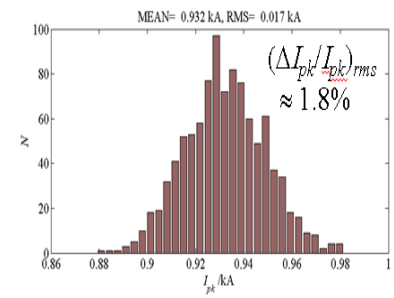

Envelope equation

$$V(t) = V_{cav}(t)\sin(\omega_{RF} \times t)$$

$$V_{cav}(t) = V_{gen}(1 - e^{-\frac{t}{\tau}})$$

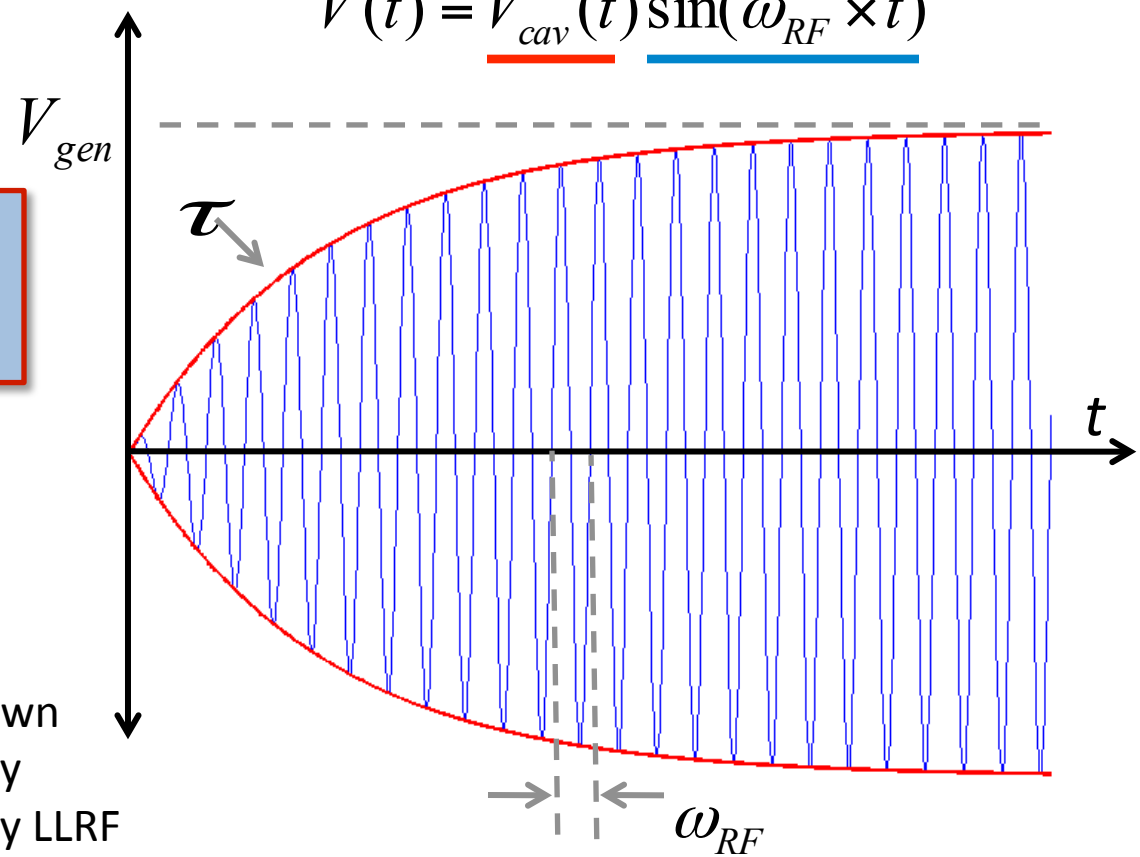

LLRF works in the modulation domain of the RF waveform

Passband and HOMs have their own envelope functions but are mostly out of band and not processed by LLRF

Driving a Cavity + Beam

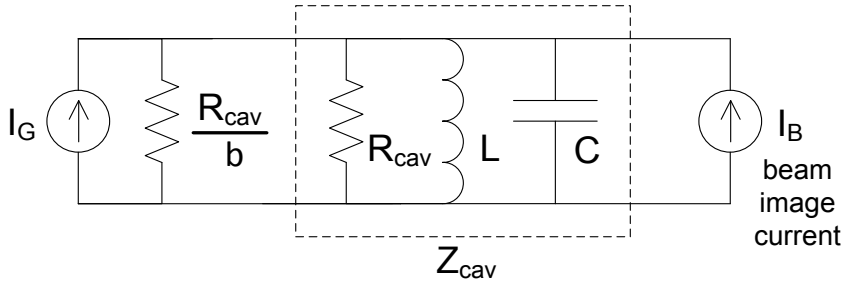

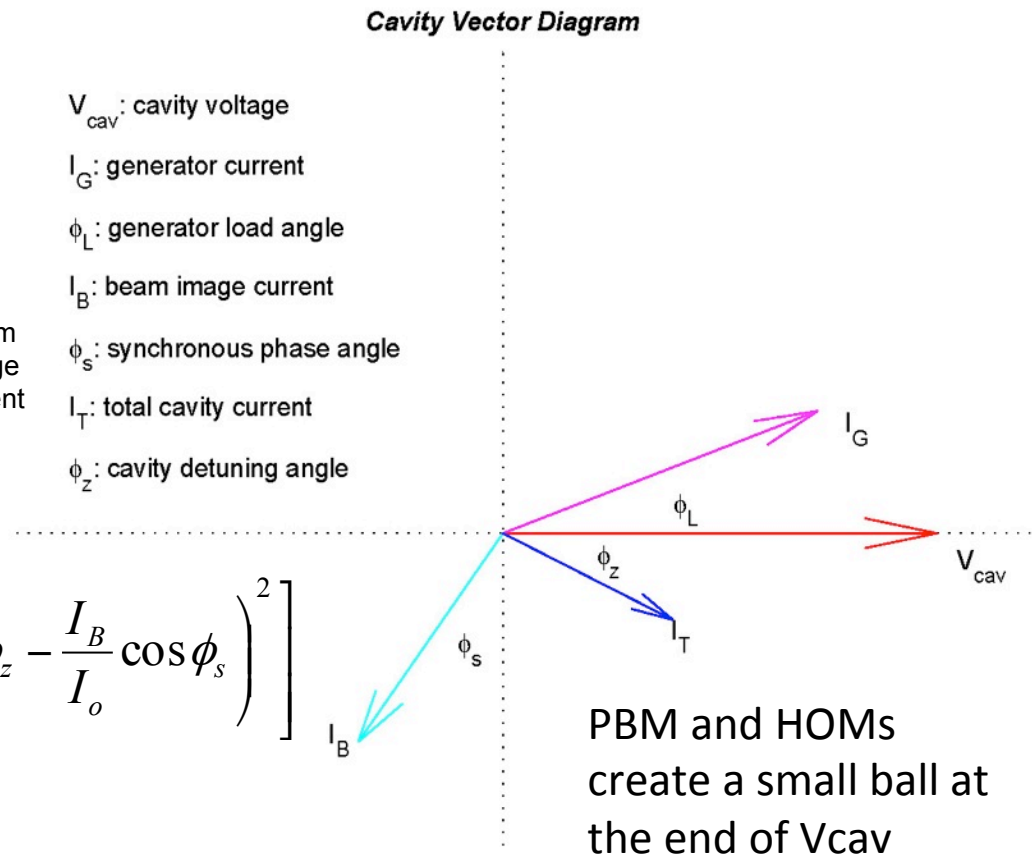

PBM and HOMs create a small ball at the end of Vcav

Required Forward Power:

$$P_g^+ = P_{cav}\frac{(\beta+1)^2}{4\beta}\left[\left(1+\frac{I_B}{I_o}\sin\phi_s\right)^2+\left(\tan\phi_z-\frac{I_B}{I_o}\cos\phi_s\right)^2\right]$$

Forward Power is minimized when:

$$\boxed{\beta_{opt} = 1 + \frac{P_B}{P_{cav}}}$$

$$\boxed{\tan\phi_{z\,opt} = \frac{I_B}{I_o}\cos\phi_s = \frac{\beta_{opt}-1}{\beta_{opt}+1}\cot\phi_s}$$

Source impedance is only defined for the fundamental frequency

Broadband HLRF response

Typical High Power Circulator Specs

Manufacturer	Kete Microwave
Description	1.15 to 1.7 GHz, High Power Circulator
Type	Dual Junction Circulator
Frequency	1.15 to 1.7 GHz
Bandwidth	150 MHz
Power	4000 W
Peak Power	400 KW
Isolation	35 dB
Insertion Loss	0.4 dB
VSWR	1.20:1
Flange	FB-140

Control of a cavity

→ Use the classic "plant-controller" approach

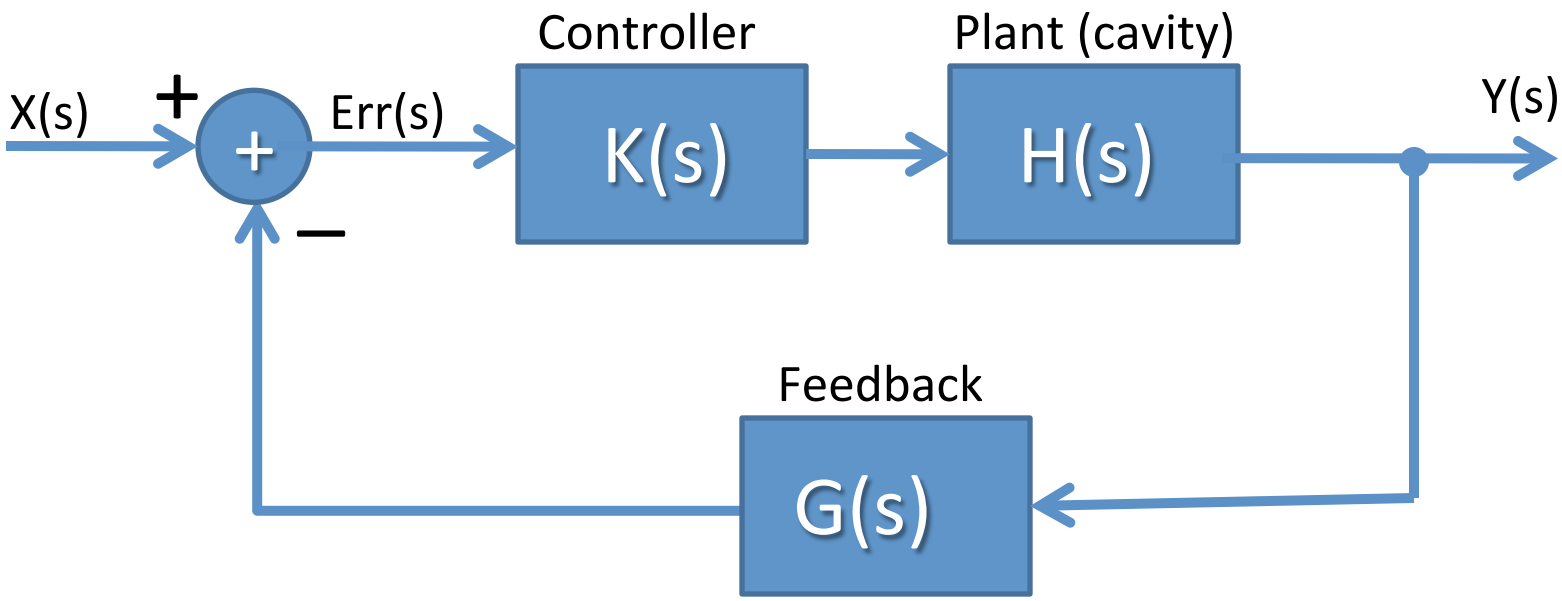

Solve close loop transfer function

$$\frac{Y(s)}{X(s)} = \frac{H(s)K(s)}{1 + H(s)K(s)G(s)}$$

ASTA CM1
Feedback and Active Detuning Compensation On

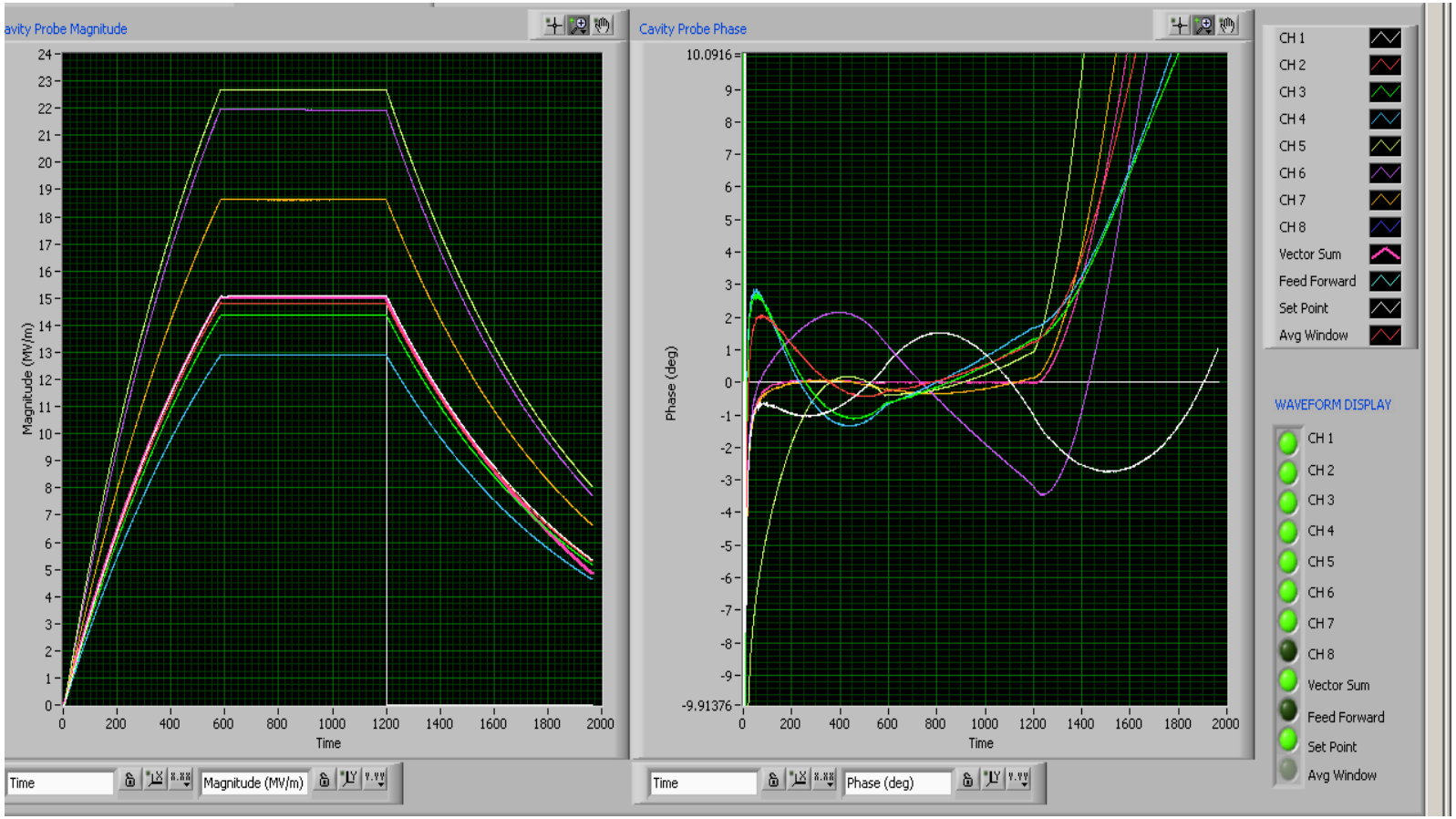

- Each cavity is following its own tuning trajectory that will vary over time

Building a LLRF system

A typical LLRF block diagram

The controller is buried here

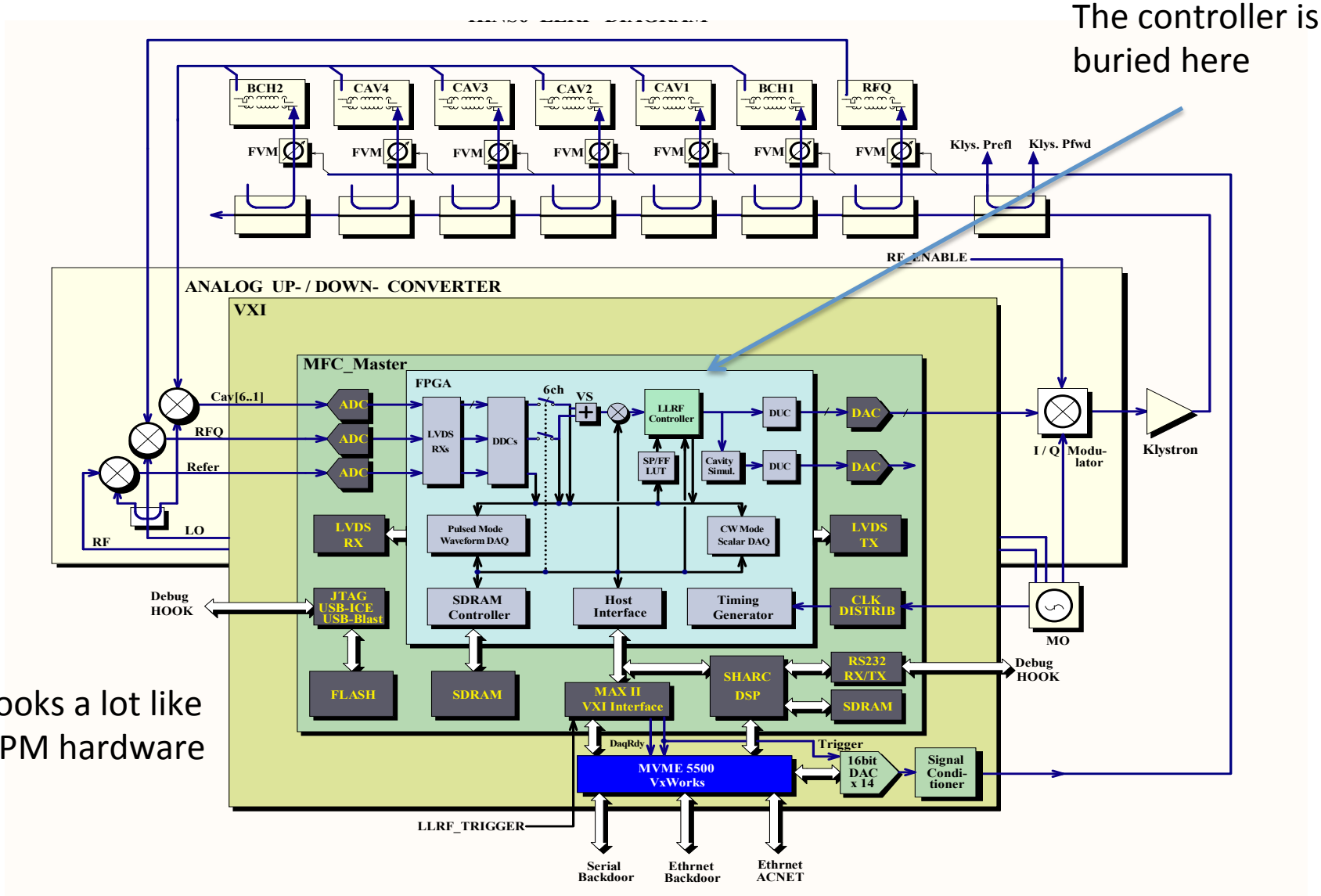

Looks a lot like BPM hardware

Controller Firmware

- Other passband modes may be unstable with feedback on. Adjustable Notch filters at 8pi/9 and 7pi/9 provide stability but not regulation or damping
- Control loops at these frequencies are possible

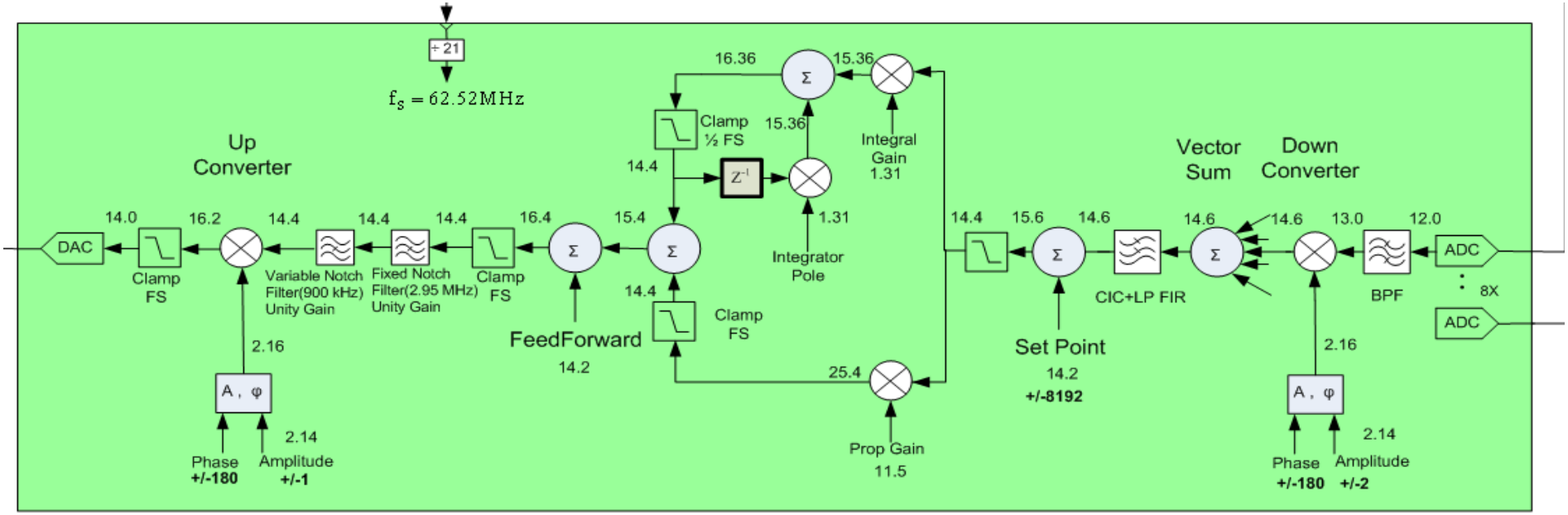

Digital Controller

Active control of Pass-band Modes?

- LLRF systems today have the bandwidth to measure and control many if not all pass-band modes
  - 125 MHz ADC sample rate is common and 250 MHz or higher is available
  - Current FPGAs have the gate density available to put control loops around each mode
- Drive sources such as klystrons will be the bandwidth limit
  - Solid state amplifiers have considerably more bandwidth

PIP-II Transit time factors

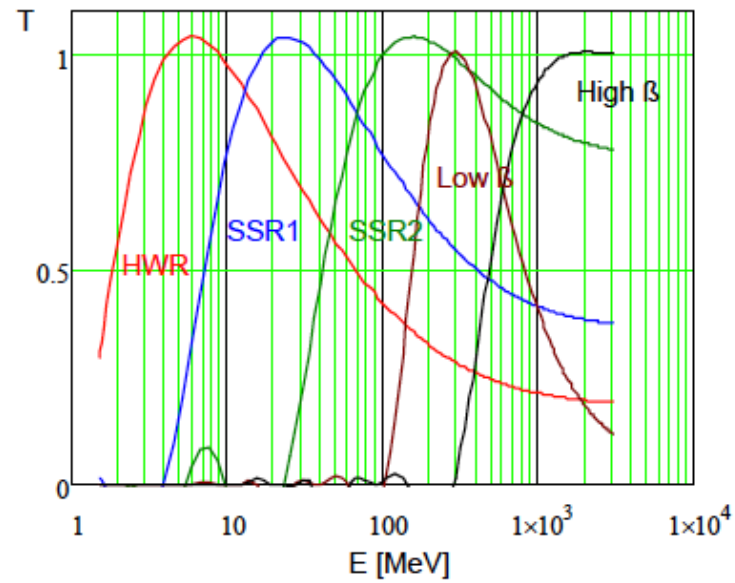

1.3 GHz 8 Channel Receiver / Transmitter

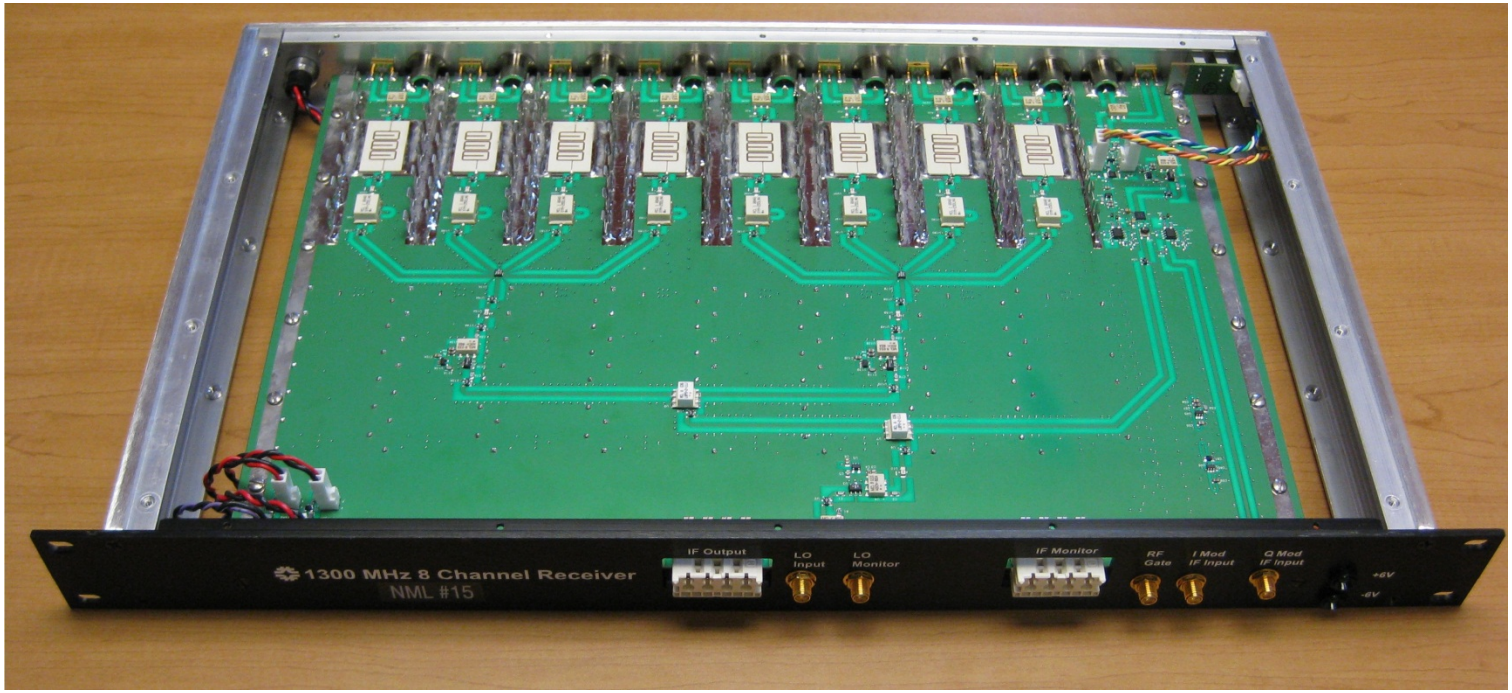

- 8 Channels of 1.3 GHz to 13 MHz down converters
- 1 transmitter with 13 MHz IQ modulation and 1.3 GHz output
- Minimum 76 dB of channel to channel isolation
- RF to IF conversion loss of 4 dB
- IF output noise floor of -153 dBm/sqrt(Hz)
- RF input 1 dB compression of 12.5 dBm
- Type-N RF input connectors, Harting 8 coax IF output connector
- Phase temperature stability of 0.06 degrees/ degree C
- Amplitude Temperature stability of 0.008 dB / degree C

Frequency Mixer (Ideal)

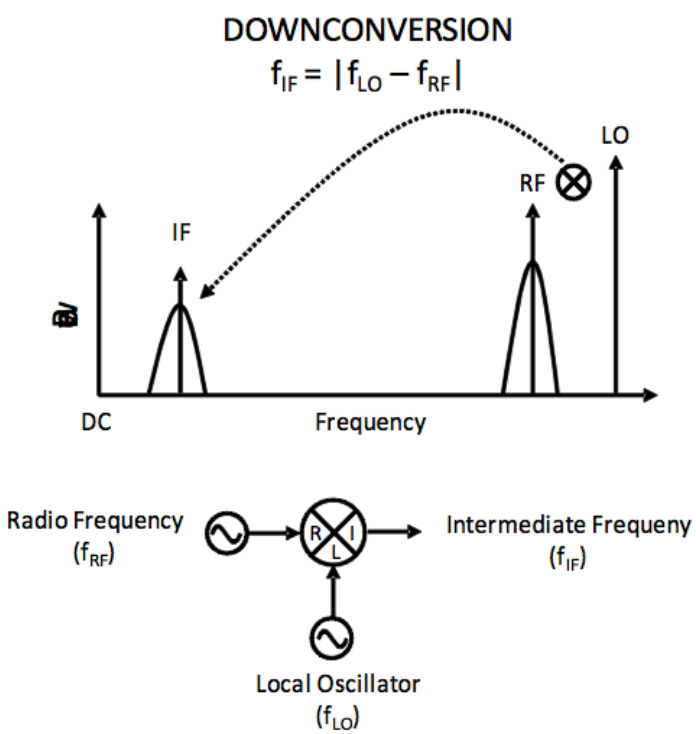

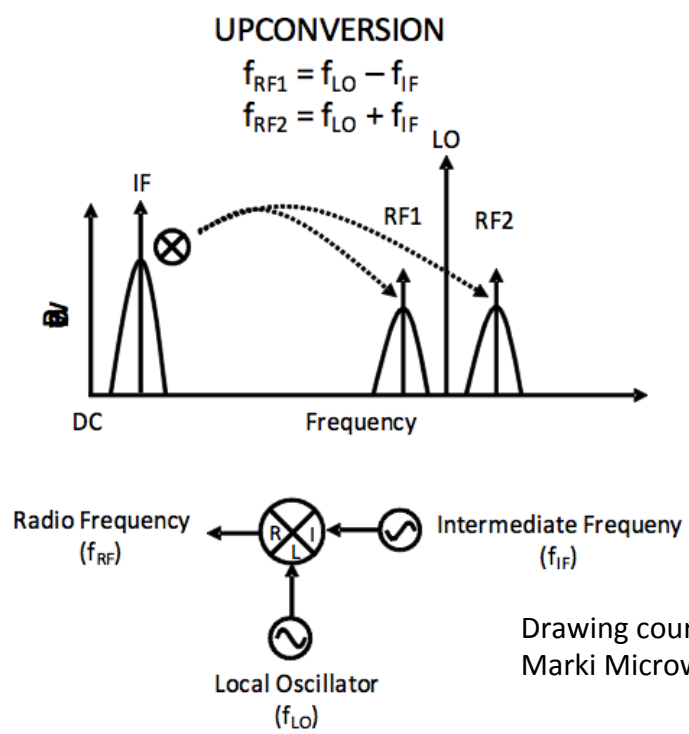

Drawing courtesy of Marki Microwave

$$y_{IF}(t) = y_{RF}(t) \times y_{LO}(t) \qquad y_{RF}(t) = y_{IF}(t) \times y_{LO}(t)$$

Down conversion conserves phase, thus lowering jitter sensitivity by: $\frac{f_{IF}}{f_{RF}}$

$2 * LO \times 1 * RF "image" Spur$

- Mixing products are generated in the mixer and are “sourced” to all three ports
  - The 2LOx1RF spur is reflected off of the RF bandpass filter and then mixed down on top of the IF

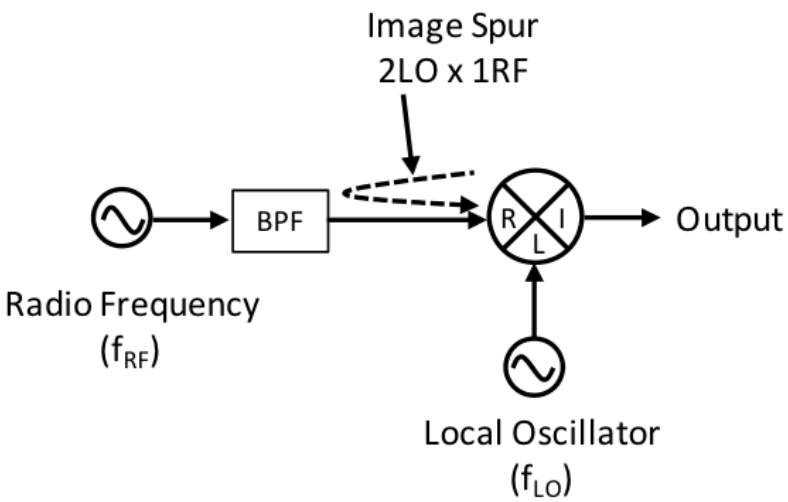

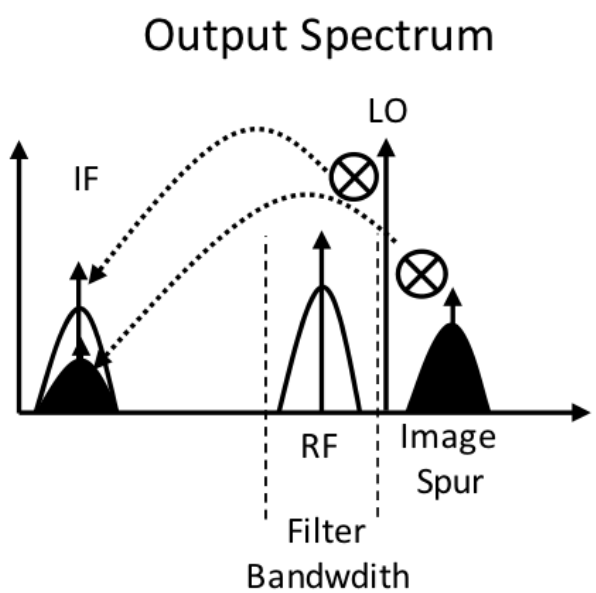

Drawing courtesy of
Marki Microwave

Downconverter mixer simulation with 1.3 GHz and 3.9125 GHz signal at the RF input

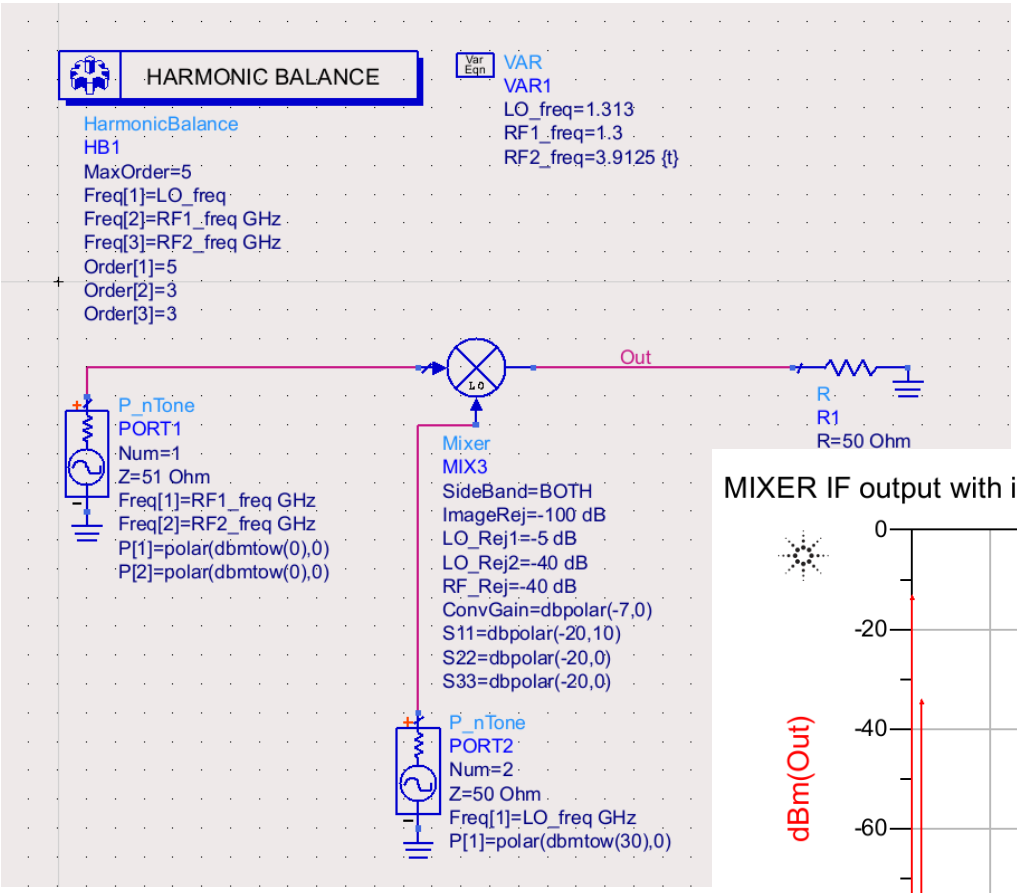

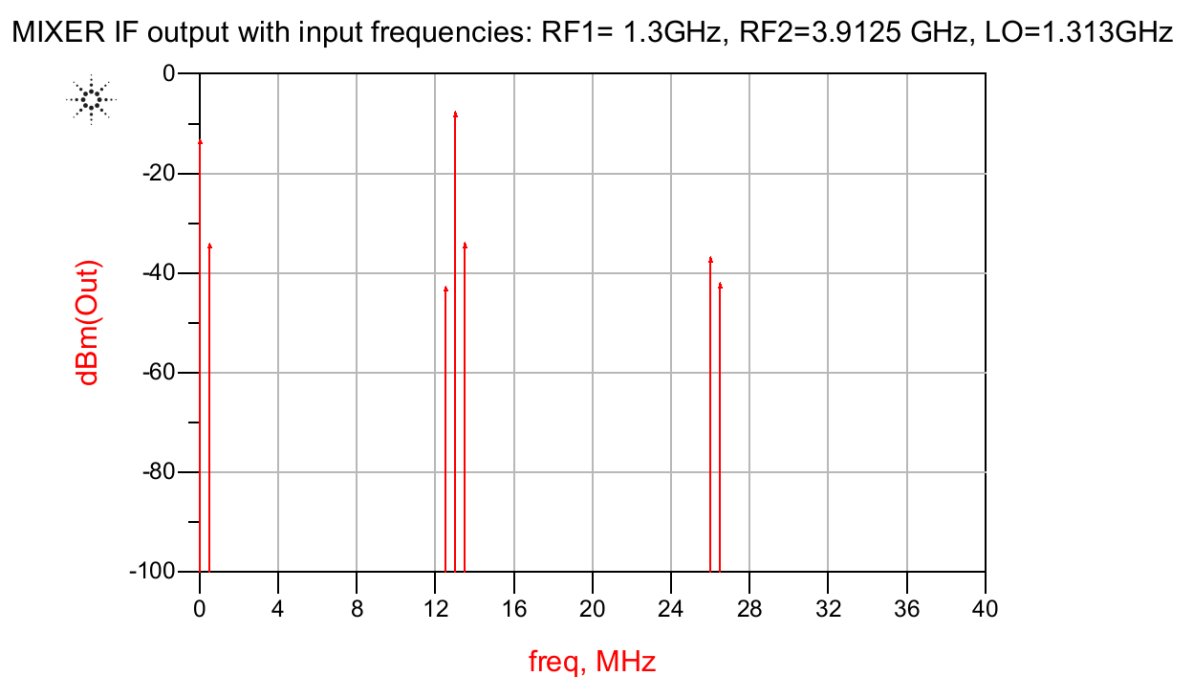

Downconverter mixer simulation with 2.4 GHz and 2.413GHz signal at the RF input

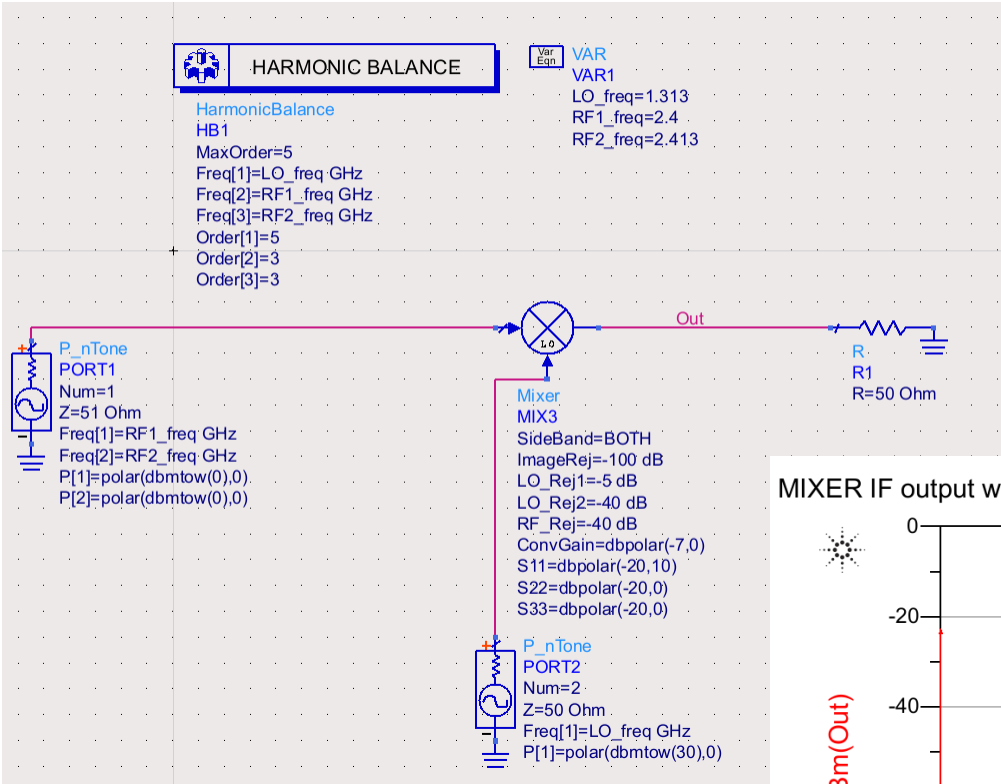

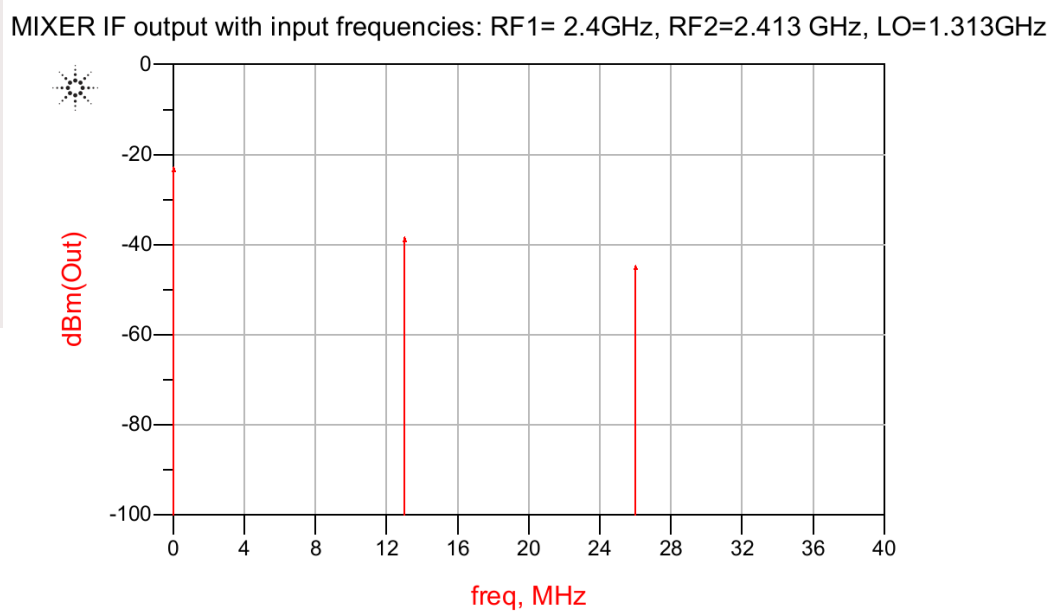

Downconverter mixer simulation with 1.3 GHz and 3.9125 GHz signal at the RF input, and a 15 MHz band pass filter

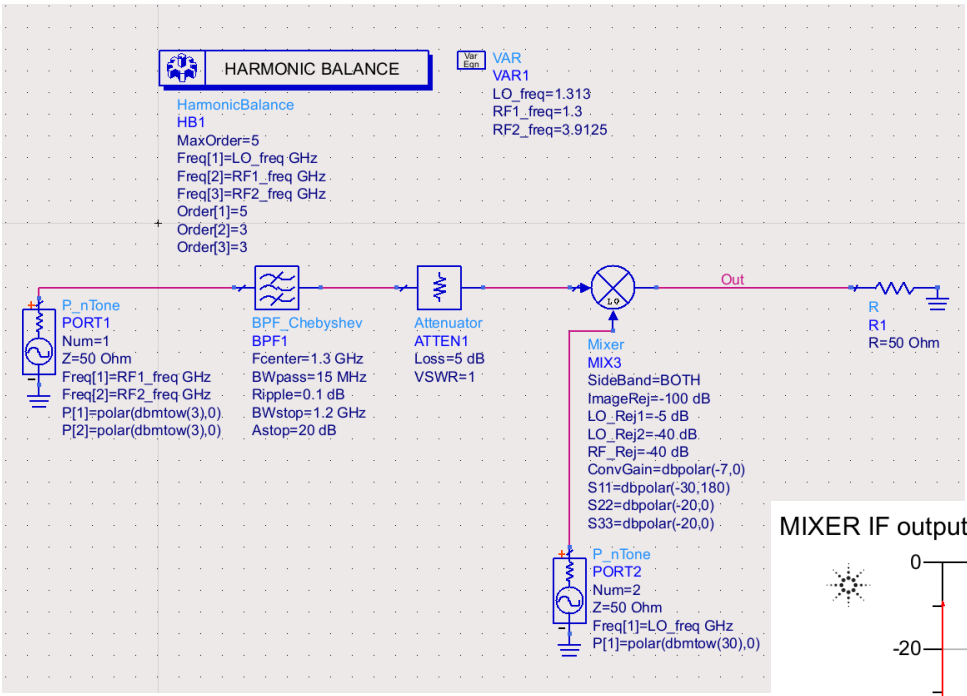

MIXER IF output with input frequencies: RF1= 1.3GHz, RF2=3.9125 GHz, LO=1.313GHz

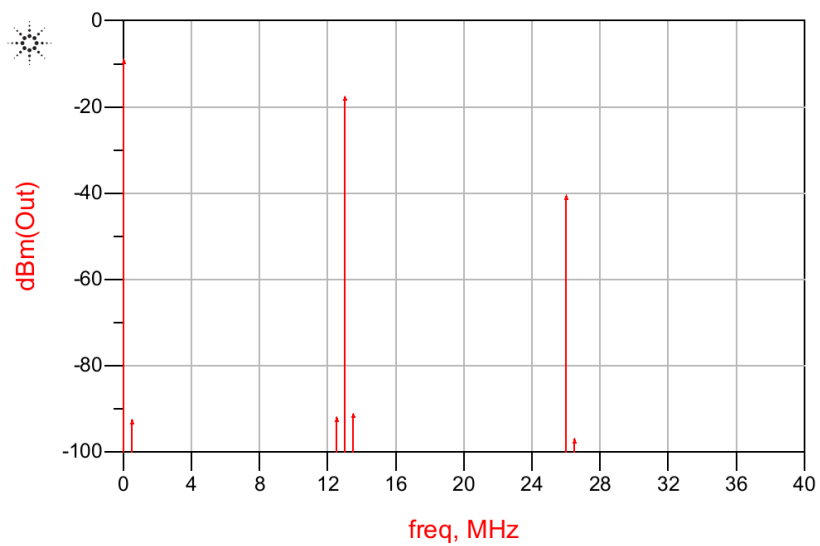

Input RF filter S21

Higher order passband – need low pass to follow

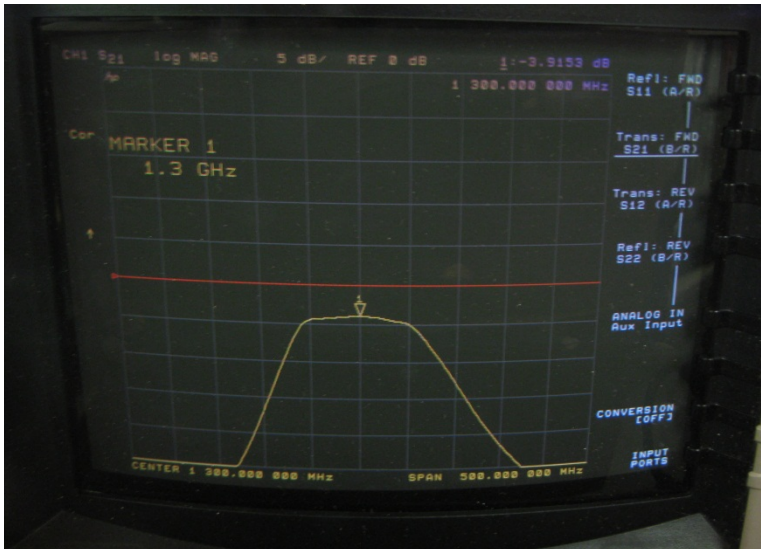

RF Filter S21

RF Filter S21 – wideband response

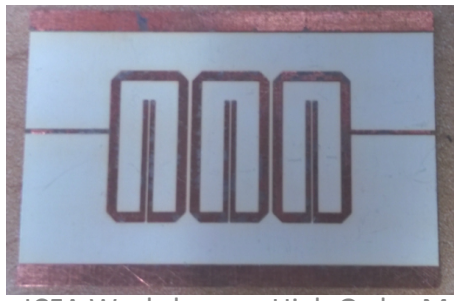

RF Input section wideband response with low pass filter after bandpass filter

RF Input section S21 to 6 GHz

Questions for discussions

- If we can measure the total HOM power then are we able to compensate LLRF at least in amplitude?
- Is a "perfect" LLRF system good enough to achieve 10-4 regulation without HOM monitoring/integration in LCLS-II?
- Is HOM BPM lack of stability in pulsed mode due to LFD and piezo drive? This could be tested without RF drive
- Should LLRF, BPMs and HOM diagnostics be integrated or more tightly coupled?
  - common phase information in RF reference, digitizer clocks. FPGAs are big enough now to do this
- What are the next steps (if any) the LLRF community should be taking regarding HOMs?