HOMSC14
WG-5, Low Level RF, Controls and System Integration

Brian Chase, Larry Doolittle

Familiar block diagram

Common to LLRF and Instrumentation

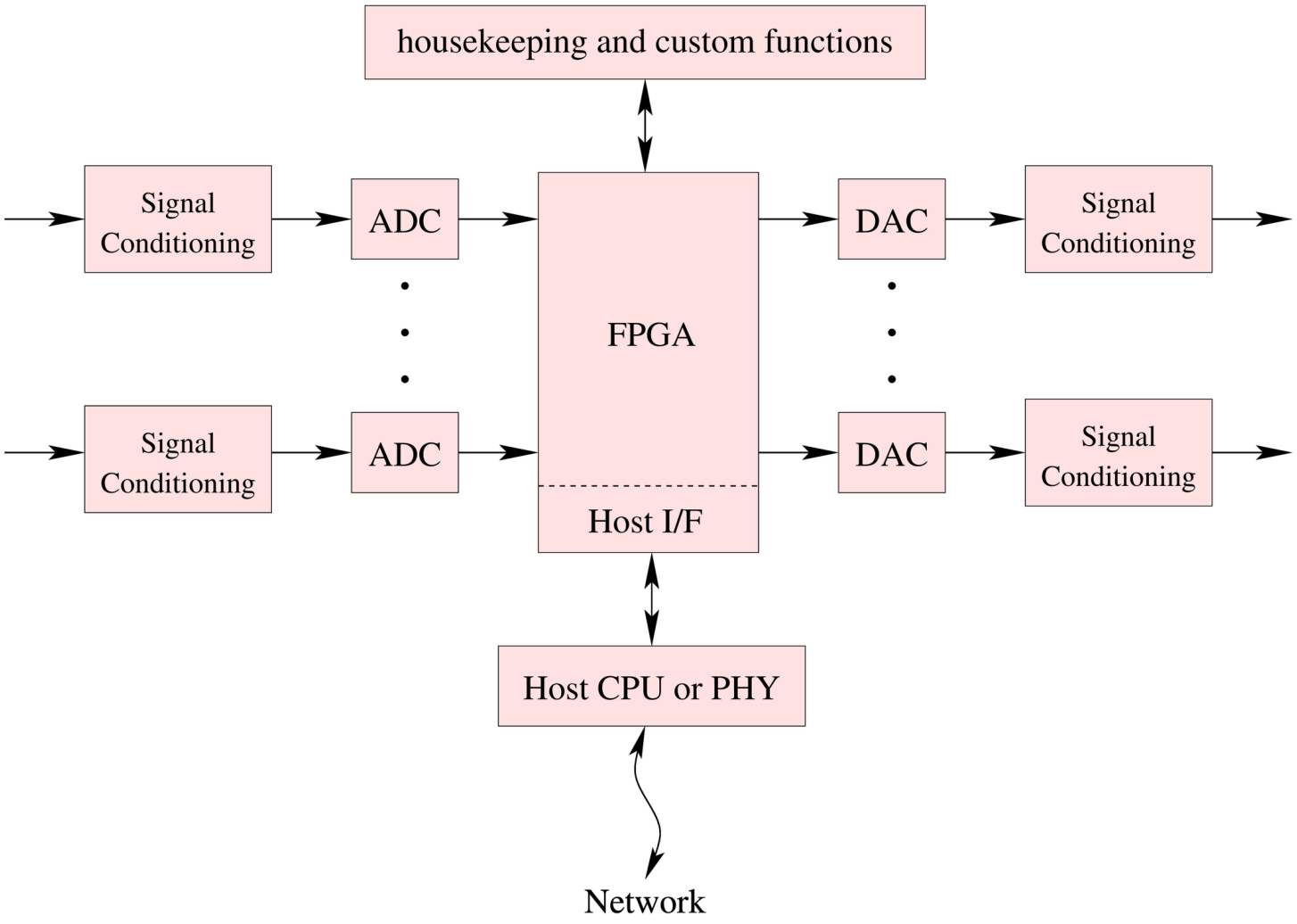

Building a LLRF system

A typical LLRF block diagram

The controller is buried here

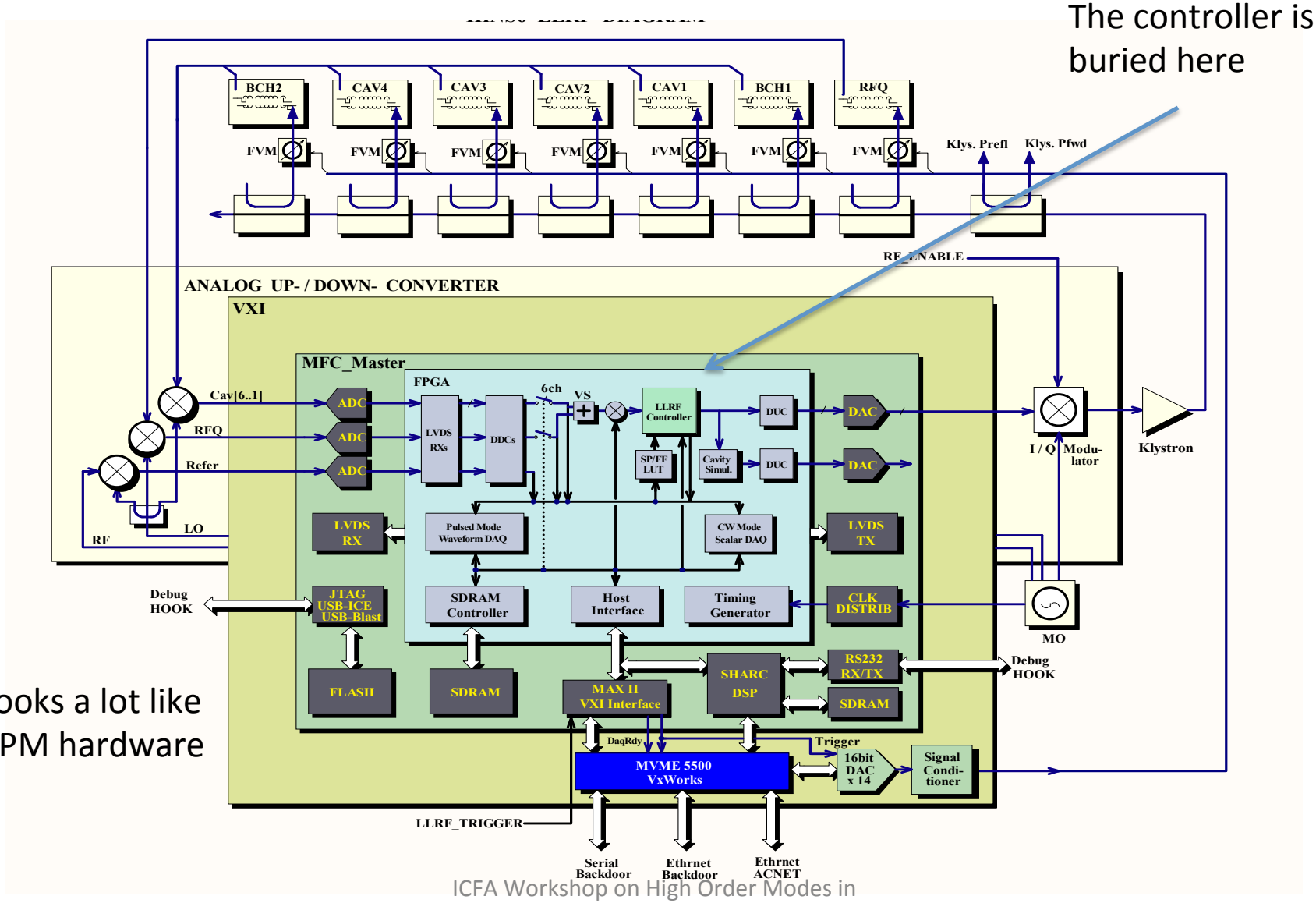

Looks a lot like BPM hardware

Control of a cavity

→ Use the classic "plant-controller" approach

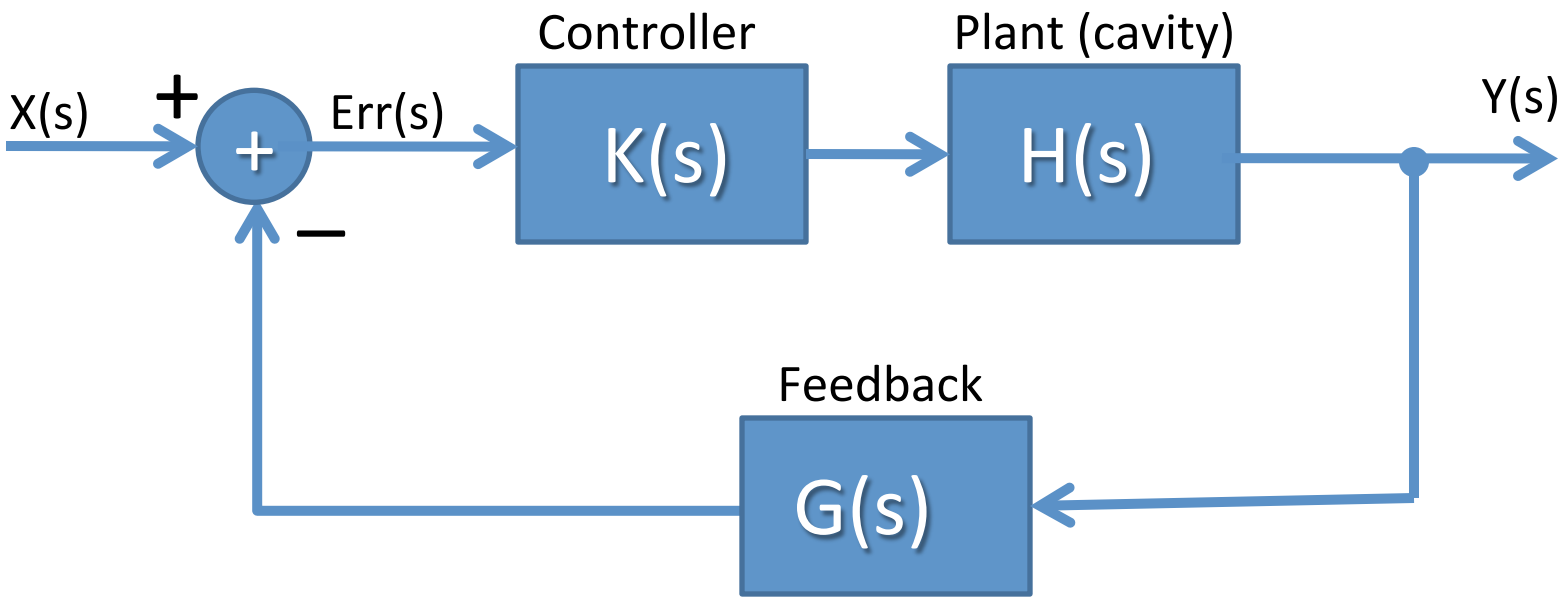

Solve close loop transfer function

$$\frac{Y(s)}{X(s)} = \frac{H(s)K(s)}{1 + H(s)K(s)G(s)}$$

Controller Firmware

- Other passband modes may be unstable with feedback on. Adjustable Notch filters at 8pi/9 and 7pi/9 provide stability but not regulation or damping
- Control loops at these frequencies are possible

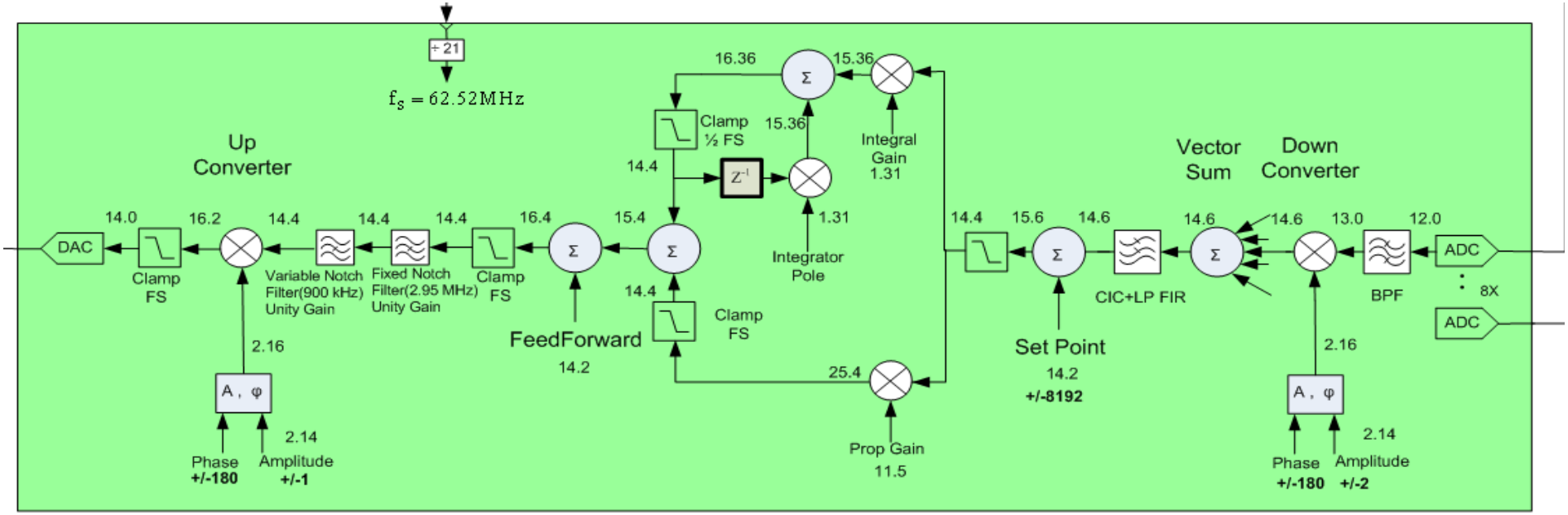

Digital Controller

RF Data Acquisition

Direct Conversion

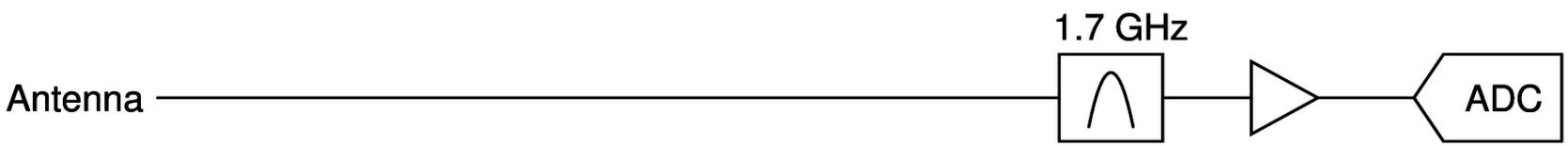

Down Conversion (heterodyne)

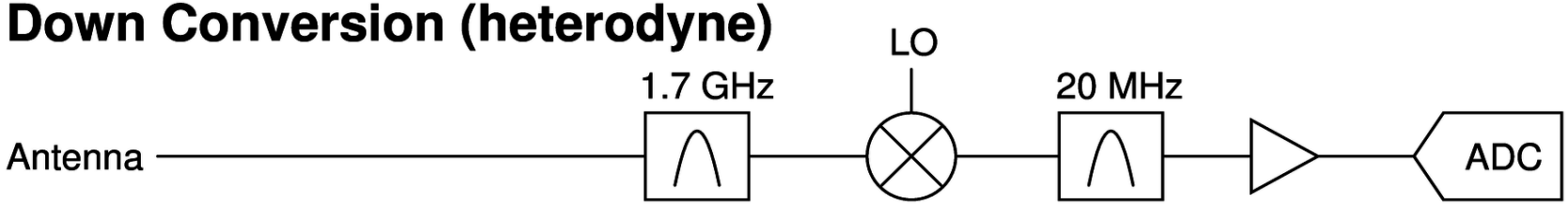

Dual Conversion (used in spectrum analyzers)

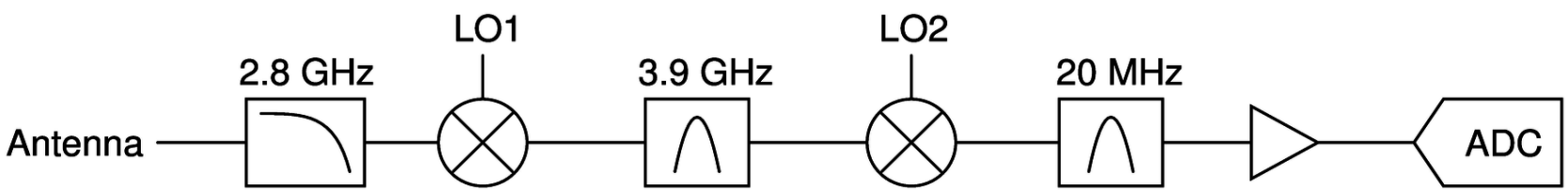

Possible HOM Transfer Function Measurements with Modulated Beam Time Structures

Some limits to how often the [photocathode laser pulse-picker] can be fired, but at low bunch charge, it is pretty much pulse-on-demand, with 26.9 ns granularity.

Gives an opening to measure monopole HOMs:
- Excite from photoinjector
- Couple to monopole cavity mode
- Synchronous RF measurement on HOM probe (or fundamental probe)

Related to Cornell's demonstrated technique, which also uses modulation created in the photocathode laser optics. Doesn't disturb longititudinal phase space setup that is sensitive to bunch charge.

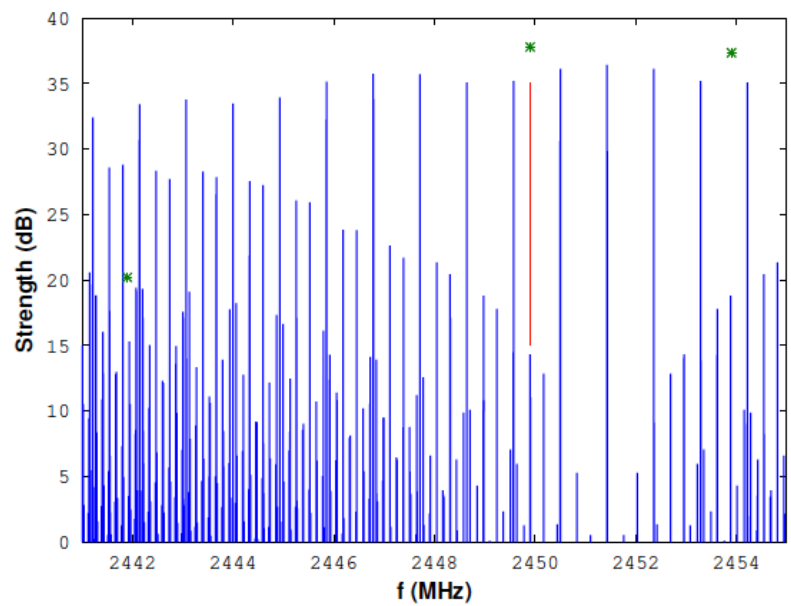

Discussion Session
Beam loading transients

Fundamental mode cavity amplitude is intrinsically a sawtooth. Using LCLS-II numbers, it ramps up due to the input klystron power over 1 microsecond, then falls back to the previous value in 3 ns as a bunch goes through.

The peak-to-peak range of that sawtooth is on the order of 1e-4, which is pretty much the same size as the total error spec for the machine. But even though this is correlated on all the cavities, it doesn't contribute anything to machine error, nor does it need fancy klystron drive waveforms.

These statements presume that the bunch pattern repeats accurately. Perturbations, such as beam pulse dropouts due to bunch stealing for diagnostics, do require feedforward from the LLRF, which is not difficult if the global machine timing network is set up sensibly.

Discussion Session
HOM Beam to RF Phase Detector

It has been demonstrated that beam to RF phase measurements can be made at the HOM ports. The accuracy and precision are under investigation.

The question is raised to the value of this phase information to LLRF and to the beam feedback system. It is noted that at FLASH the relative phasing of the gun, laser and ACC1 are hard to deconvolve and information from even the first cavity of ACC1 would help.

It is agreed that this is valuable information as long as the measurement is stable.