Crab Cavity Modeling

Zenghai Li

Feb. 17, 2014

Modeling Efforts

Design/optimization/evaluation of two designs toward engineering realization:

- ☑ RF Dipole (RFD) cavity
- ☑ Double Quarter Wave (DQW) cavity

- RFD cavity
  - HOM coupler design improvement
  - Imperfection study
  - RF pickup port
  - RFD Lorentz force detuning calculation
- DQW cavity
  - FPC/HOM port
  - HOM coupler RF field evaluation
  - HOM coupler Multipacting analysis
  - HOM coupler damping evaluation

- Summary and Plan

RFD, DQW Parameters

RFD DQW

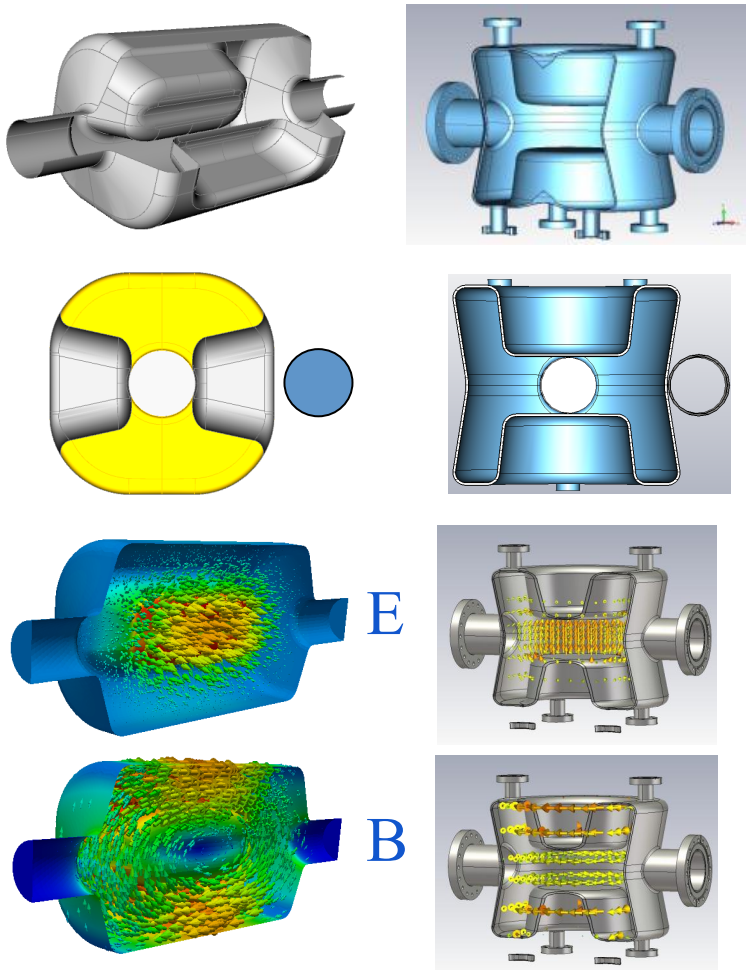

	RFD	DQW
Frequency (MHz)	400	400
Operating Mode	TE11	
Lowest dipole HOM (MHz)	633	683
Lowest acc HOM	715	579
Iris aperture (diameter) (mm)	84	84
Transverse dimension (mm)	281	278/332
Vertical dimension (mm)	281	278
Longitudinal dimension (w/o couplers) (mm)	556	390
R_T (ohm/cavity)	433	428
V_T (MV/cavity)	3.34	3.34
Bs (mT)	55.6	69.3
Es (MV/m)	33.4	39.6

- Deflect mostly by E field
- No lower order mode
- Compact

RFD Cavity with Couplers

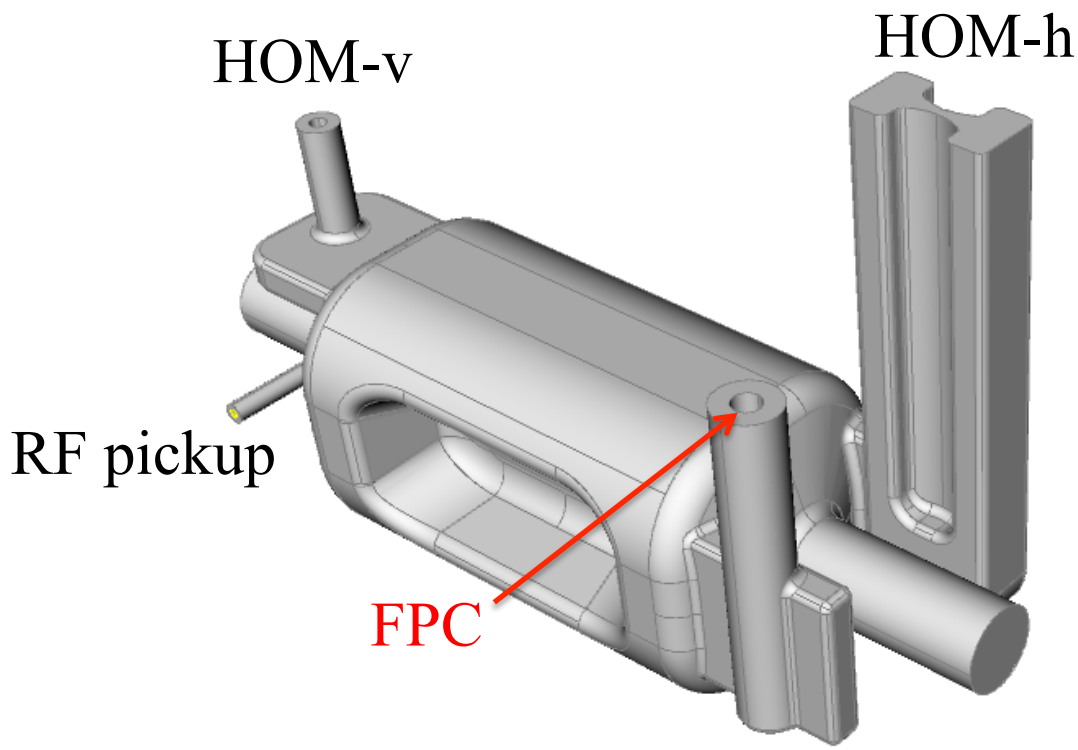

- One HOM coupler for each plane
- Selective, no filter

RFD – HOM Couplers Improved to Damp a few "problematic" Modes

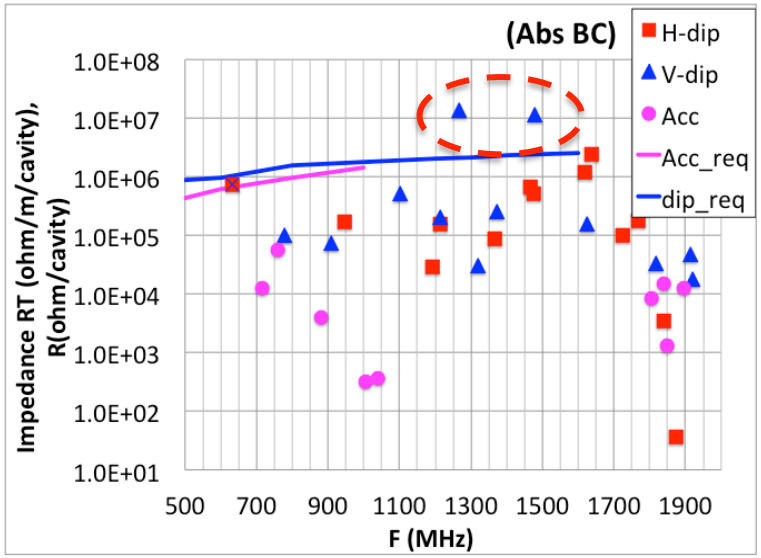

(two modes have high impedance)

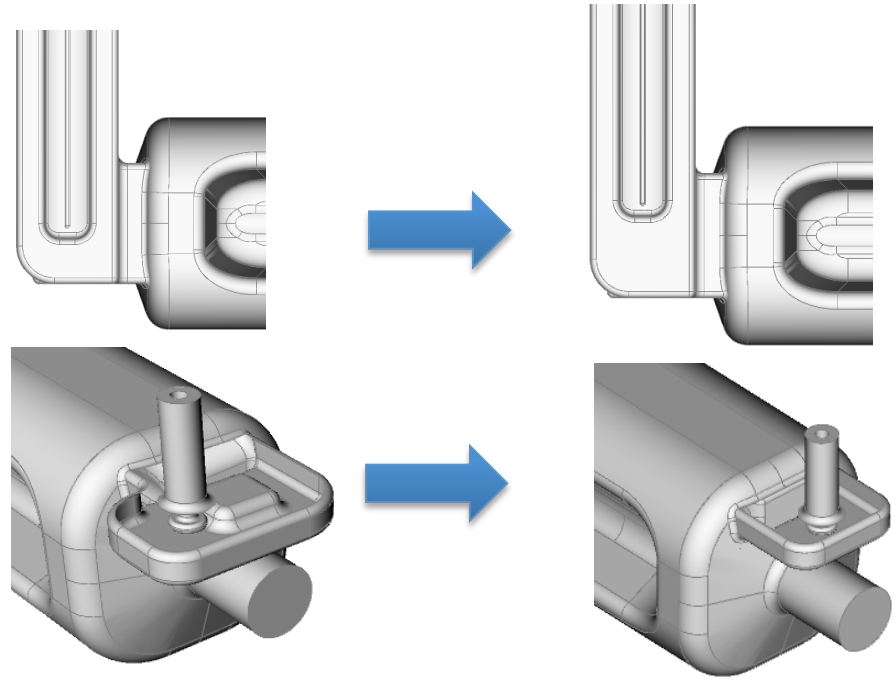

Older design

Improved design

- Horizontal HOM coupler – moved up the starting position of the ridged gap
- Vertical HOM Coupler – simplified wg stub, pickup coax moved toward the symmetry plane
- No field enhancement in couplers

Effective Damping Achieved for All HOMs up to 2 GHz

- Qext of modes at 1.265 and 1.479 GHz lowered by more than 10X
- Other modes remain well damped

➢ Engineering design for the SPS test cavity

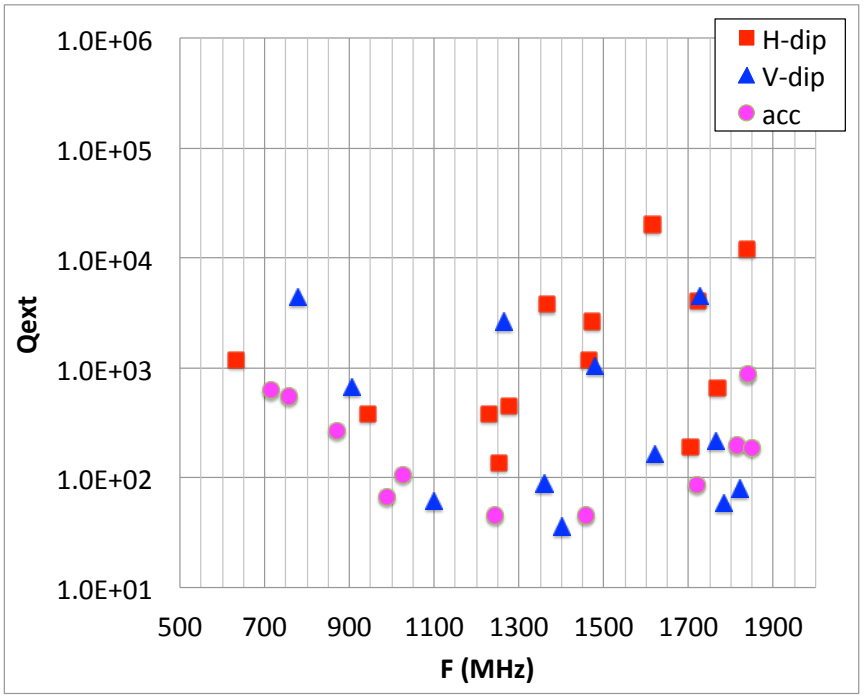

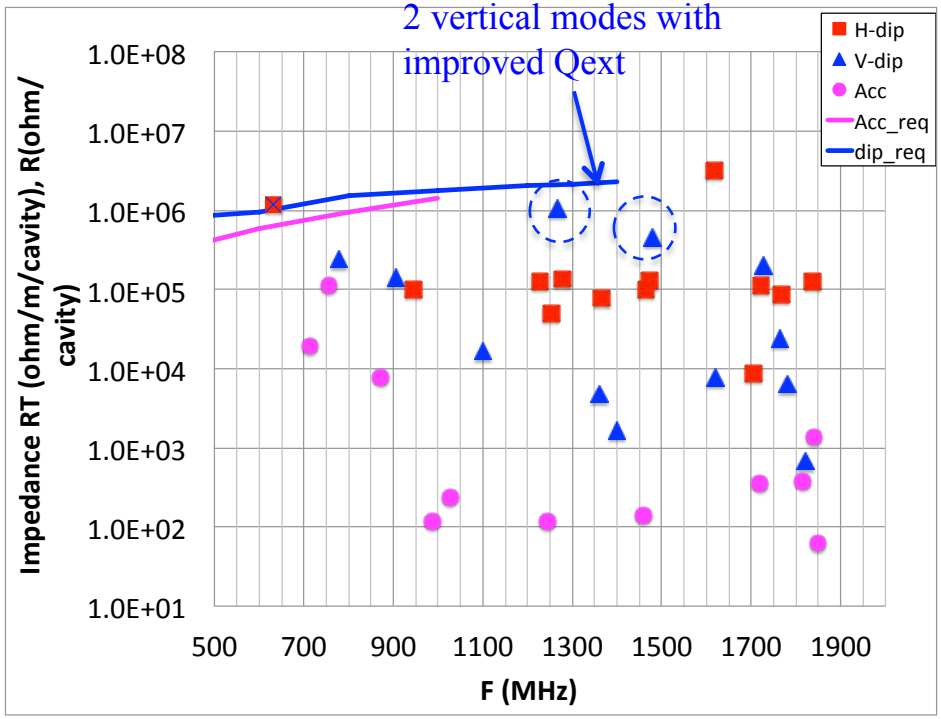

HOM Coupler with MP Suppressed

- Significant MP in the ridged gap region (flat, smooth surface)

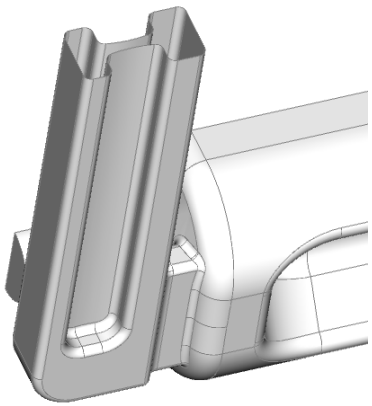

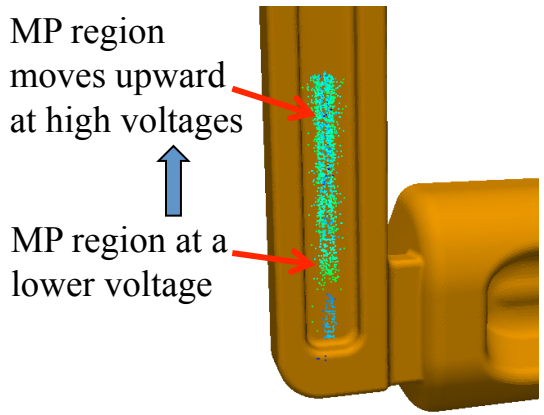

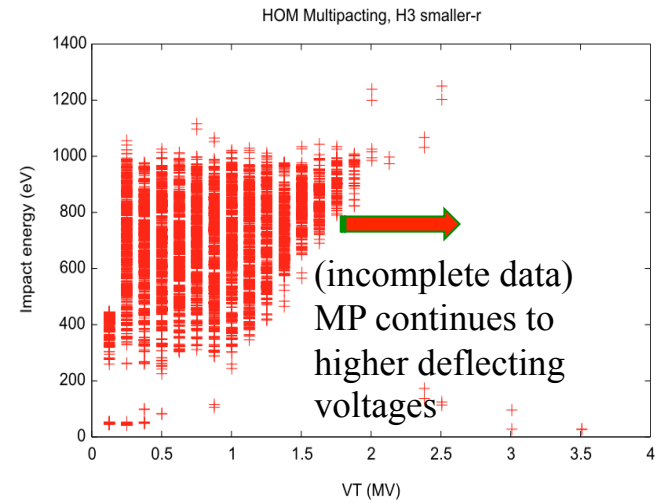

- MP suppressed with a small bump on gap surface

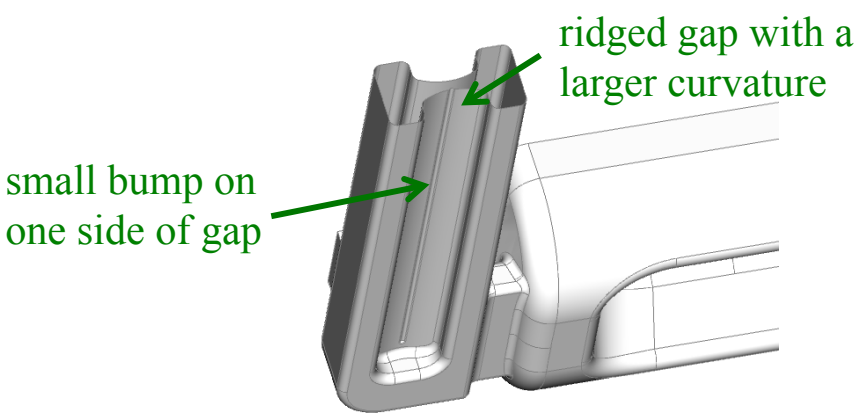

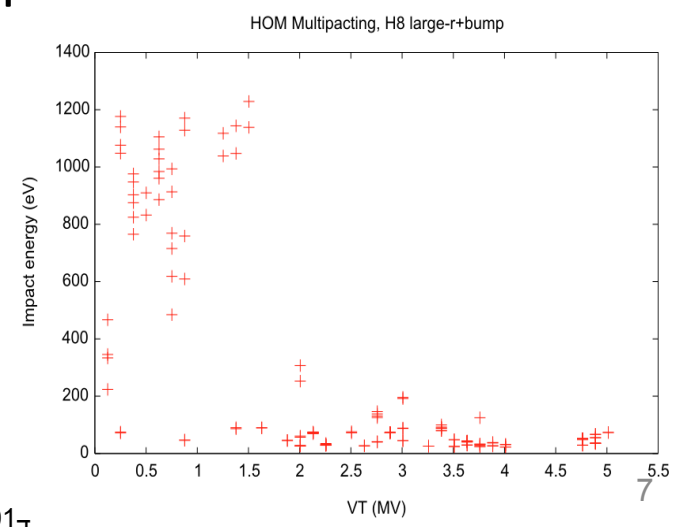

Wall Loss in NC WG Section vs Position of SC to NC Transition

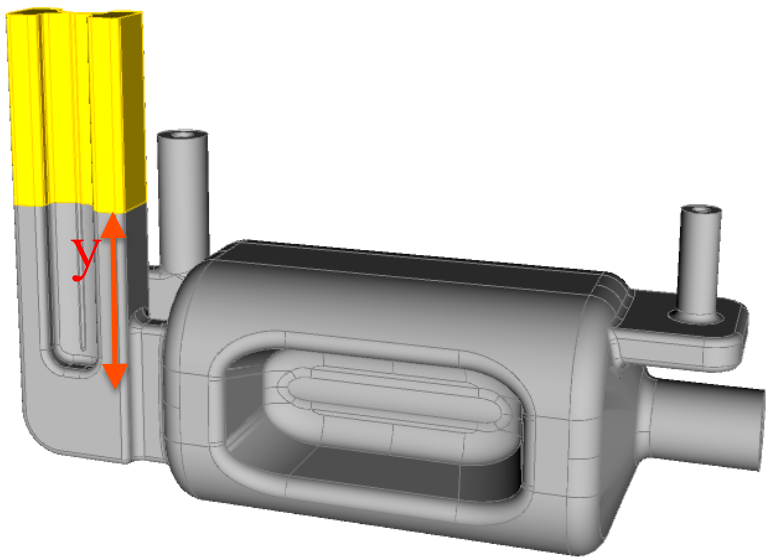

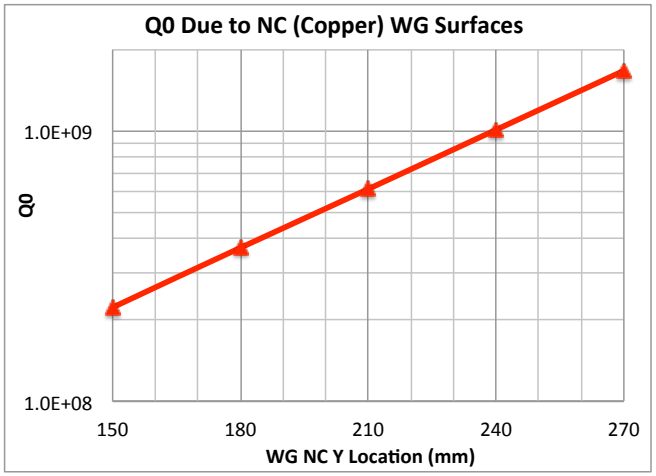

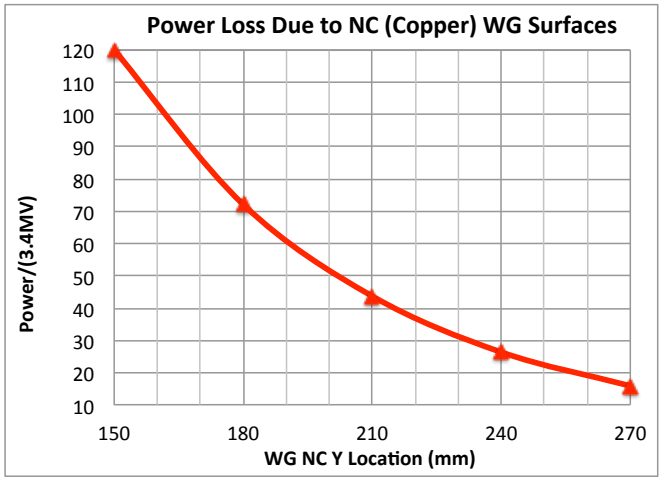

- Evanescent field in horizontal HOM coupler causes residual power loss to the NC portion of the waveguide

➢ Flange location, gasket heating, cooling, etc.

FPC Coupler

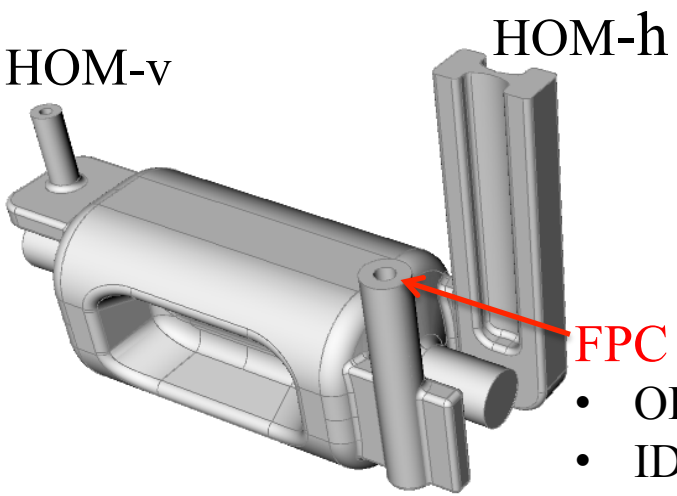

- OD: 62 mm
- ID: 27 mm

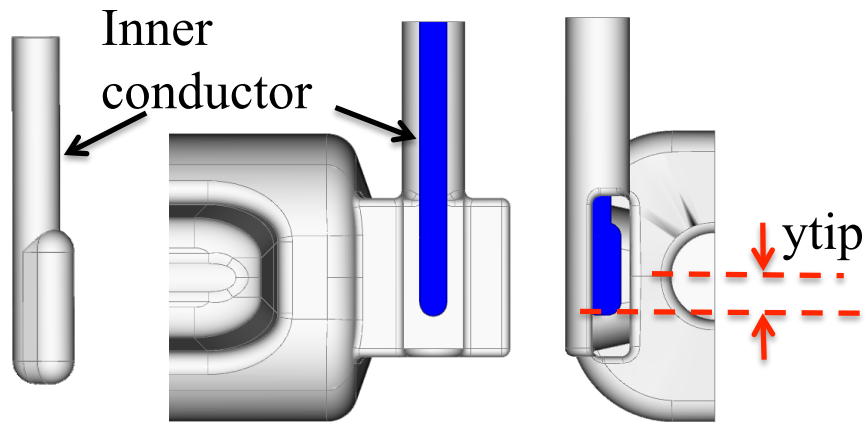

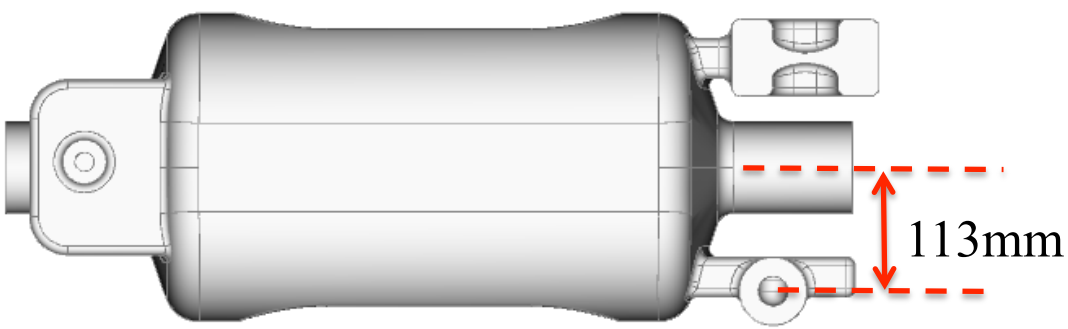

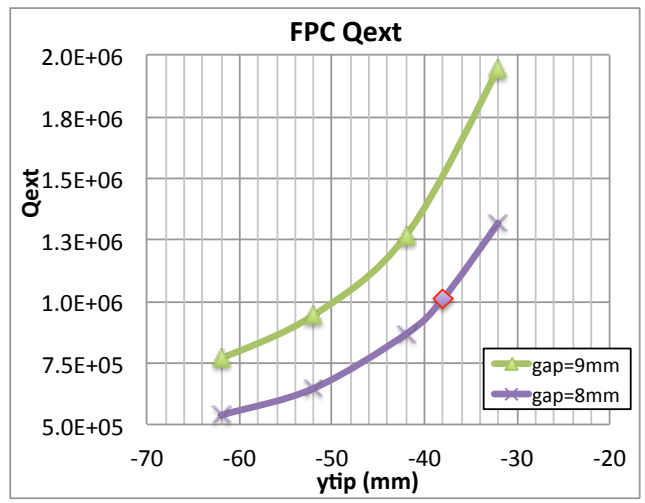

- Satisfy interface requirement
- No field enhancement at coupler port
- MP suppressed

Effect of Dipole Pole Tilt and Offset

Imperfection models studied

- xoff set

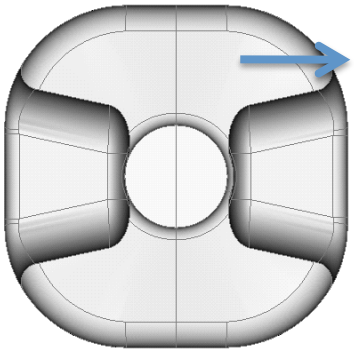

- yoff set

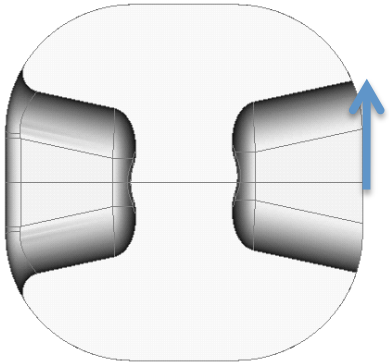

- zoff set

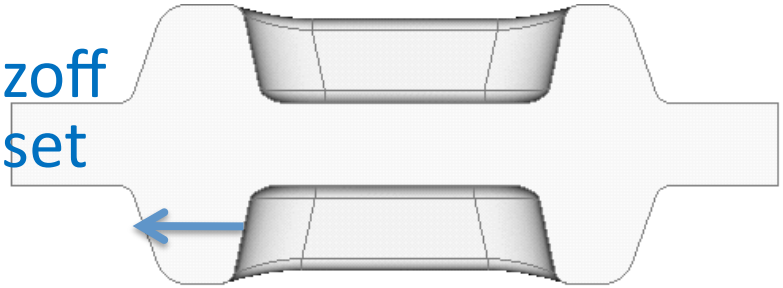

Xtilt

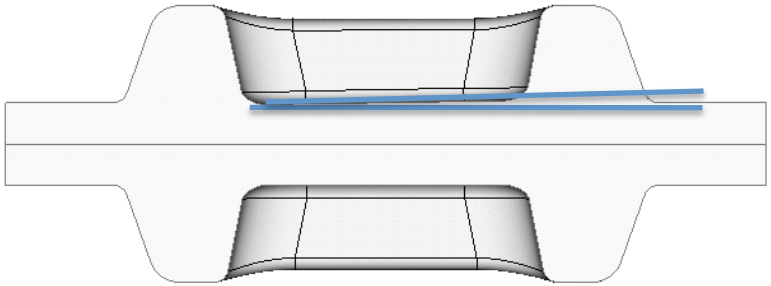

ytilt

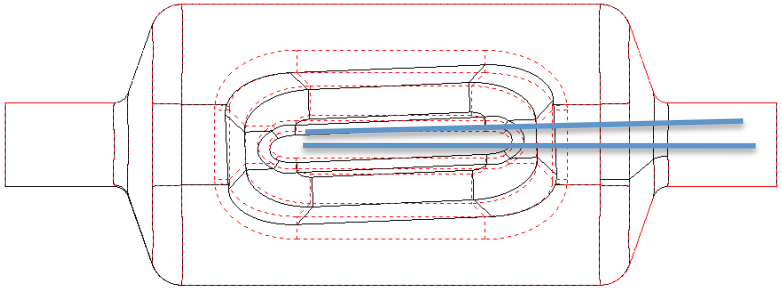

zrotate

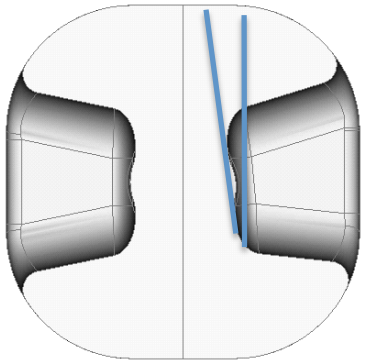

Multipole Field with a Tilted/ Offset Pole

	xcenter off (mm)	Vy/Vx	B3 (mT*m)/m^2	B5 (mT*m)/m^4	B7 (mT*m)/m^6	B3 Skew	B5 Skew
xtilt 0.5 deg	0.73		492	2.2E+06	7.8E+08		5.4E+03
ytilt 0.5 deg	0.10	2.2E-03	489	2.3E+06	7.5E+08	49	5.5E+04
zrot 1 deg	0.10	7.9E-03	494	2.2E+06	7.0E+08	136	5.7E+03
xoff 2mm	1.55		677	2.1E+06	7.3E+08		1.6E+04
yoff 2mm	0.09	2.2E-03	536	2.2E+06	6.9E+08	311	2.1E+05
zoff 2mm	0.44		509	2.3E+06	7.2E+08	13	3.8E+04

- Small effects on multipole fields
- Induce skew sextupole and deflection in other plane
- Cause shift in electric center
- In general, tolerance manageable

Lorentz Force Detuning

- Frequency shift due to shape deformation by RF field pressure
- Calculated using ACE3P multi-physics solver

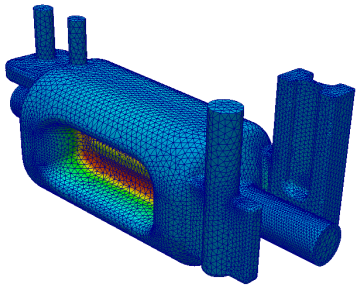

E Field

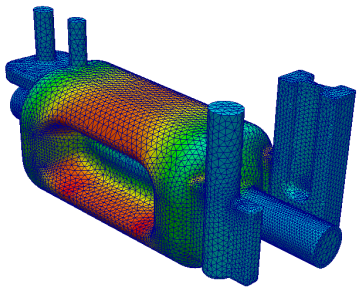

B Field

$$P = \frac{1}{4}(\mu_0 H^2 - \varepsilon_0 E^2)$$

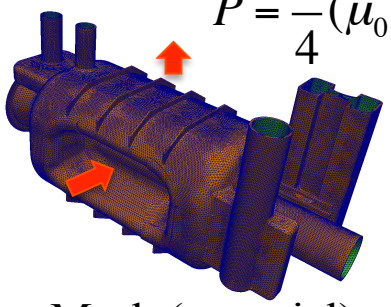

Mesh (material)

Ports free: dF = -3286 Hz/3.5MV

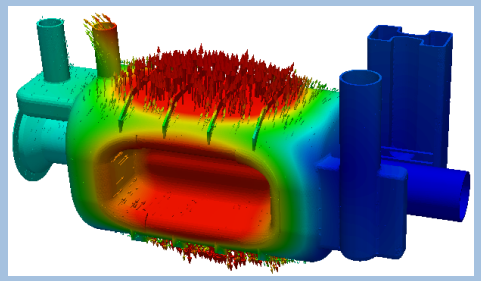

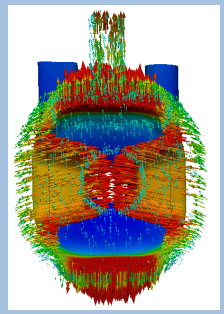

Ports fixed: dF = -3190 Hz/3.5MV

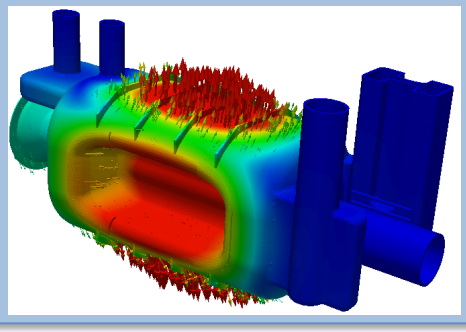

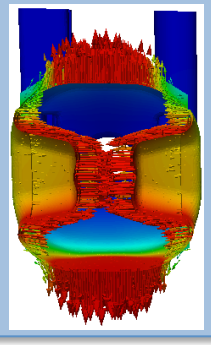

Pickup Port

1) Suba's pickup probe model
- Pickup port inside He vessel
- Q_pickup = 1.5e10
- P_pickup/3.5MV = 1.95W

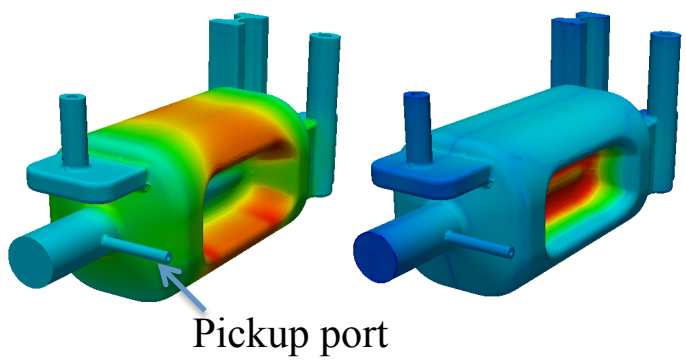

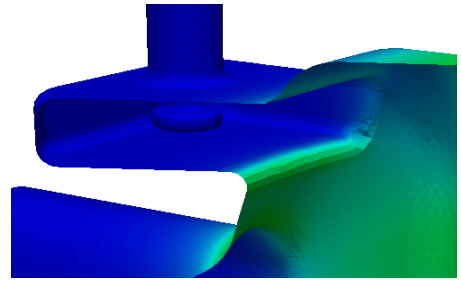

HOM antenna sees "no" B field (no cooling needed(?))

2) Shorter stub
- Pickup port outside of He vessel (8-mm space between vacuum walls of stub and pickup coax)
- Q_pickup = 1.7e10
- P_pickup/3.5MV = 1.7W

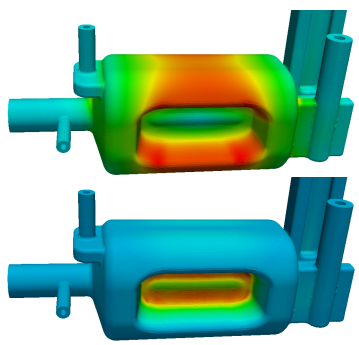

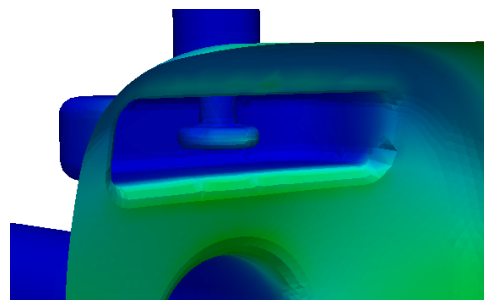

HOM antenna sees B field (Antenna needs to be Nb, cooled)

DQW Cavity with Couplers

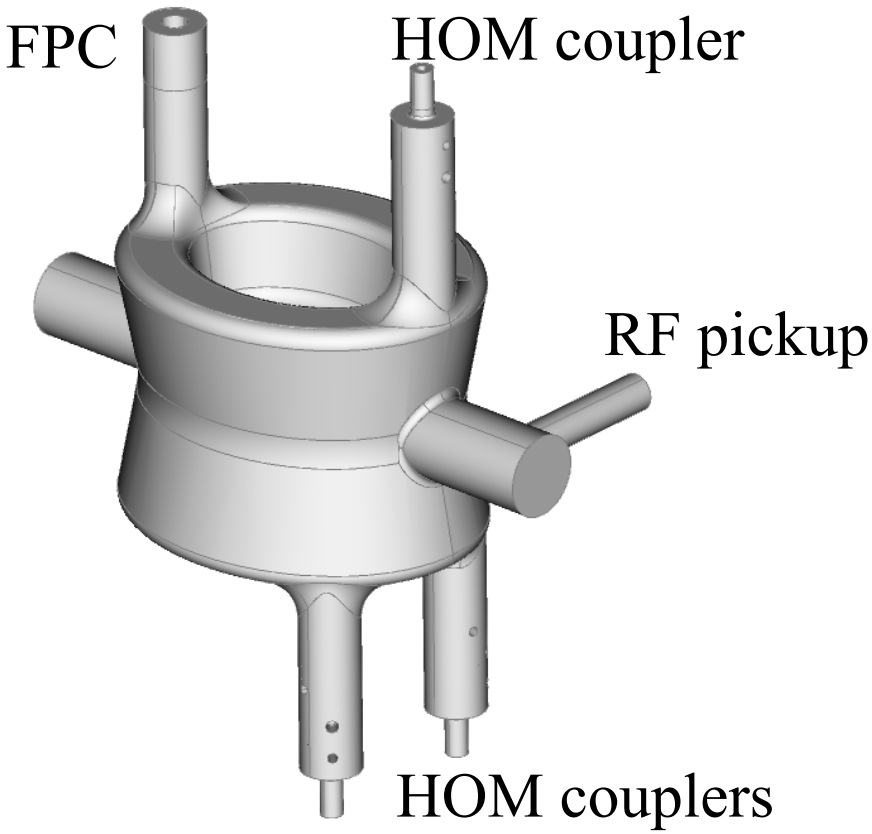

- Three HOM couplers in total
- High-pass filter to reject operating mode

DQW: Port Design Comparison/Selection

- Three port designs with different rounding profiles at the cavity-coupler interface analyzed
- Compared RF and surfaces fields of three designs for the final choice for DQW cavity

V_def/cavity: 3.34 MV			
	RC	Simple	Slope
R/Q (ohm)	426	428	428
Es (MV/m)	38.8	39.6	38.1
Bs (mT)	69.8	69.3	89.7
dCenter (mm)	0.62	0.51	0.53

design choice

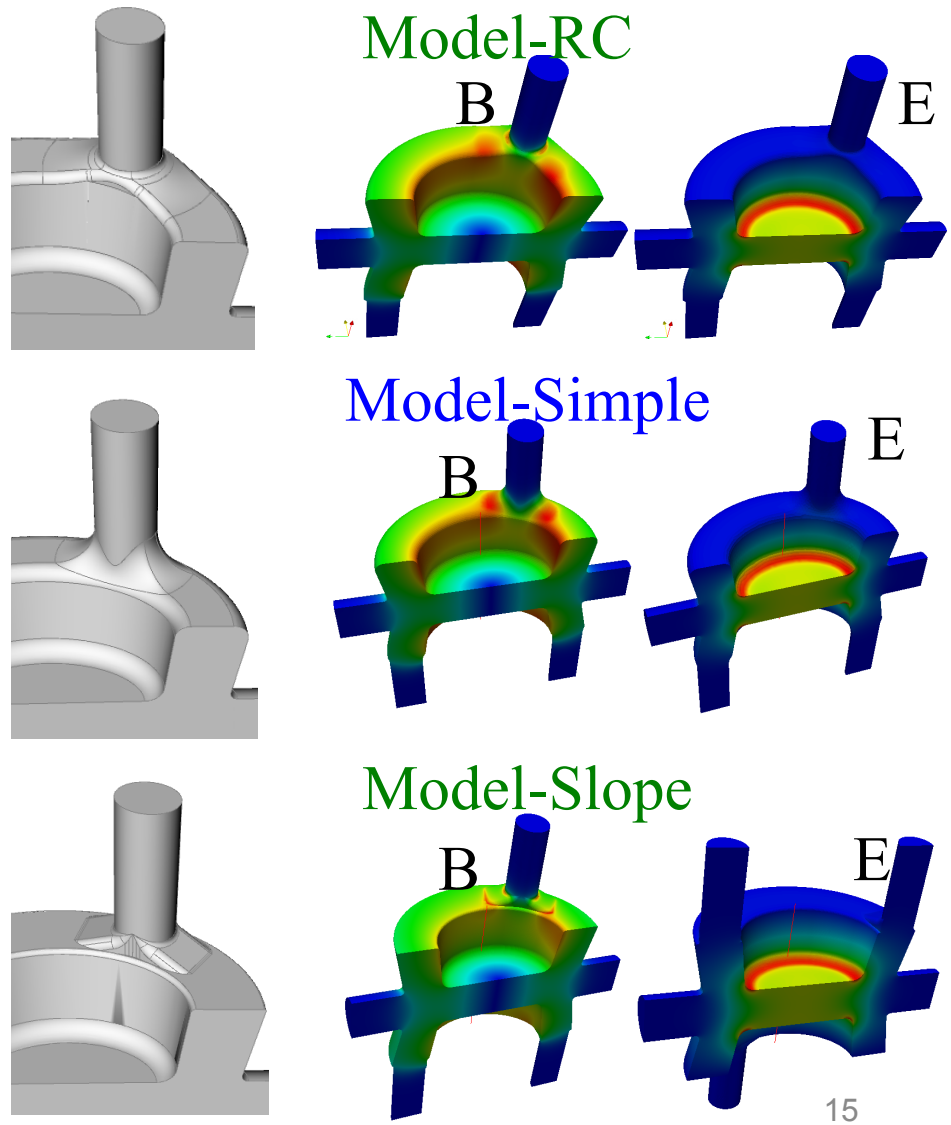

Surface Fields in HOM Couplers

- Non-negligible fields on the coupler hook antenna surface
- Highest B fields on the filter inner conductor surface, modification underway to reduce field enhancement

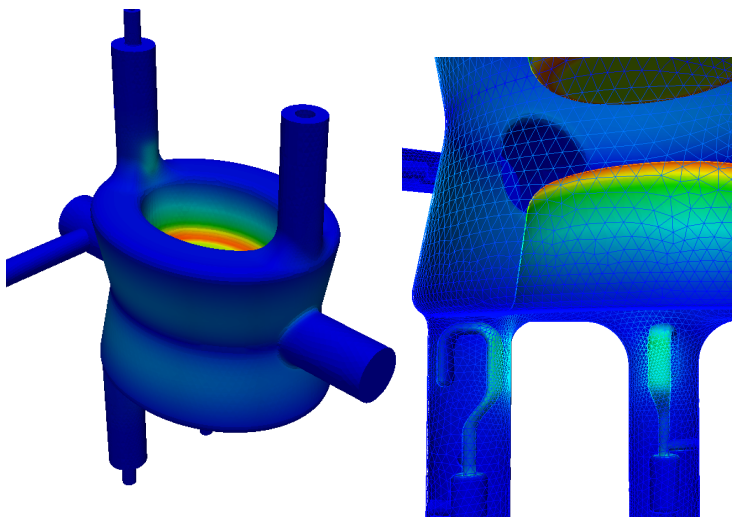

E surface field

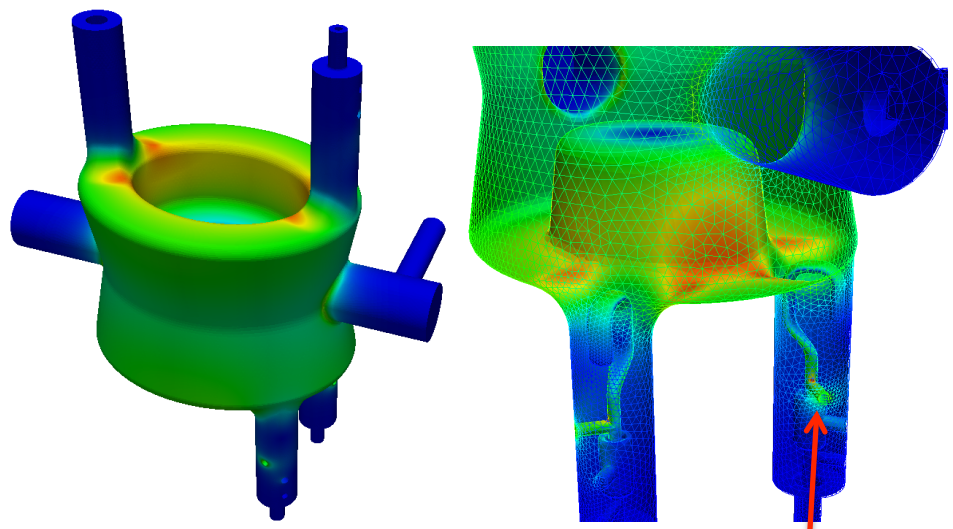

B surface field

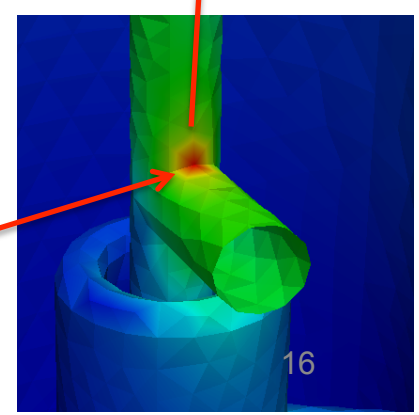

81mT/
3.4MV

MP Map in HOM Couplers

- Simulated using ACE3P Track3P multipacting analysis tool
- MP trajectories at the port opening and the filter capacitor regions
- Impact energies of MP bands at low V_T in range of significant SEY

MP map on
bottom HOM coupler

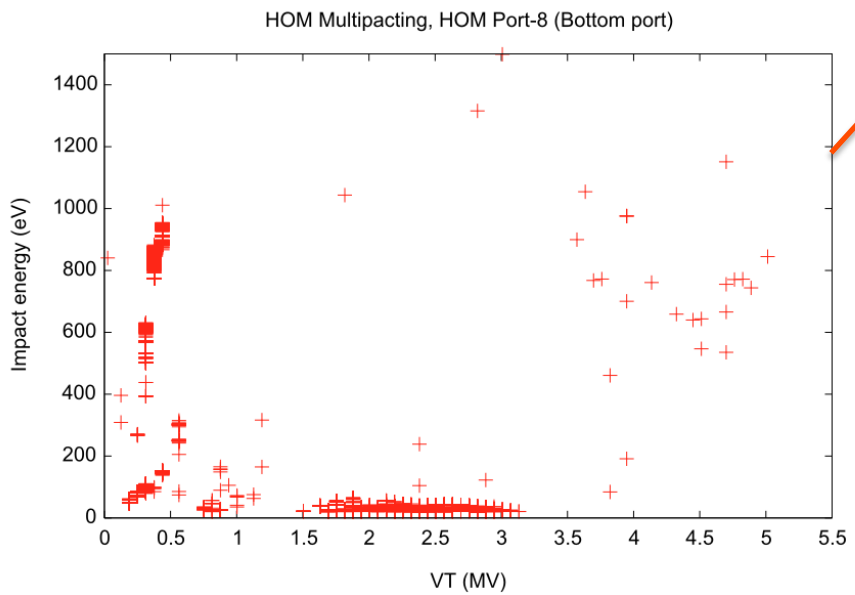

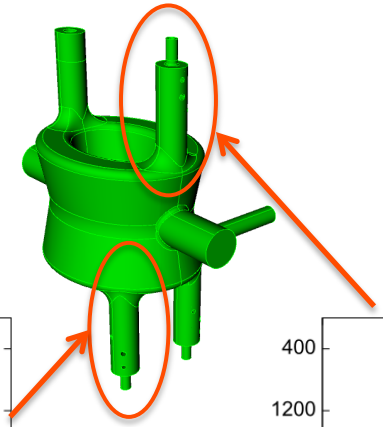

MP map on
top HOM coupler

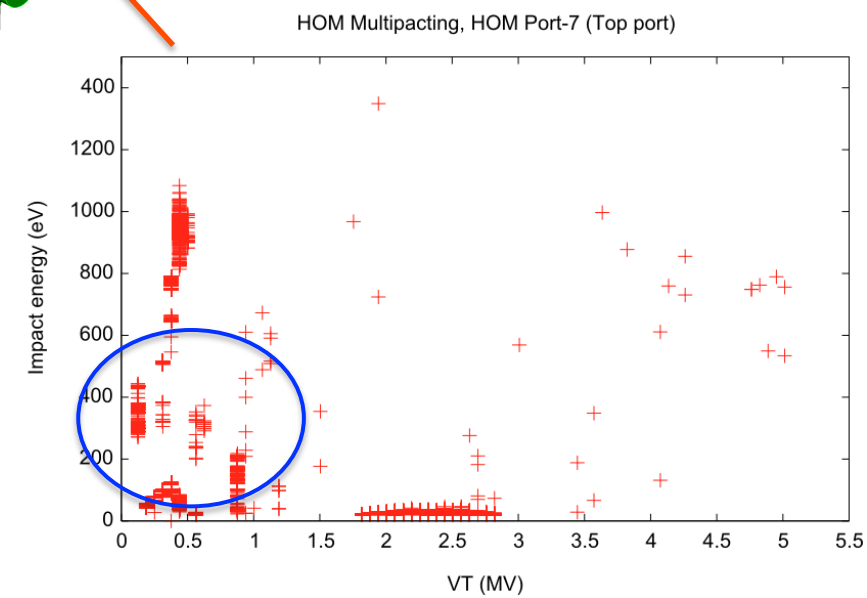

MP Location in HOM Couplers

bottom HOM

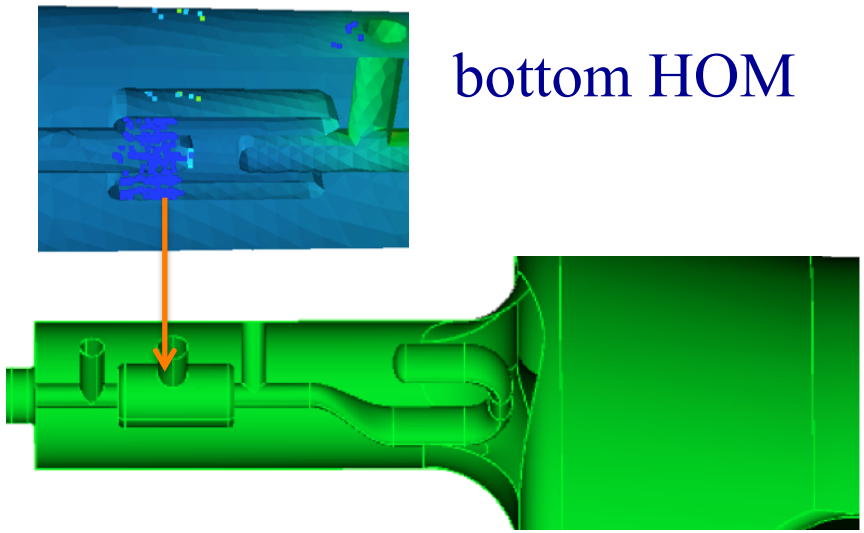

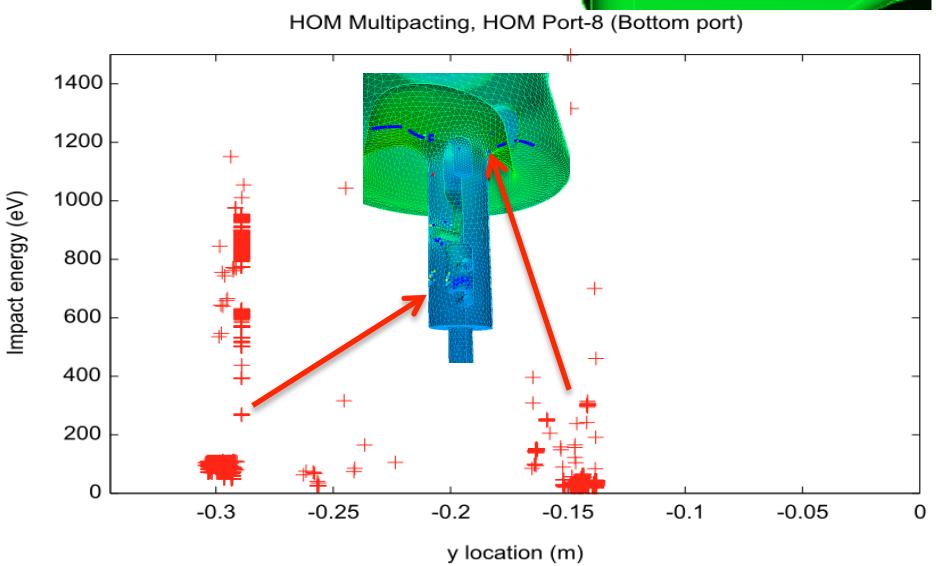

top HOM

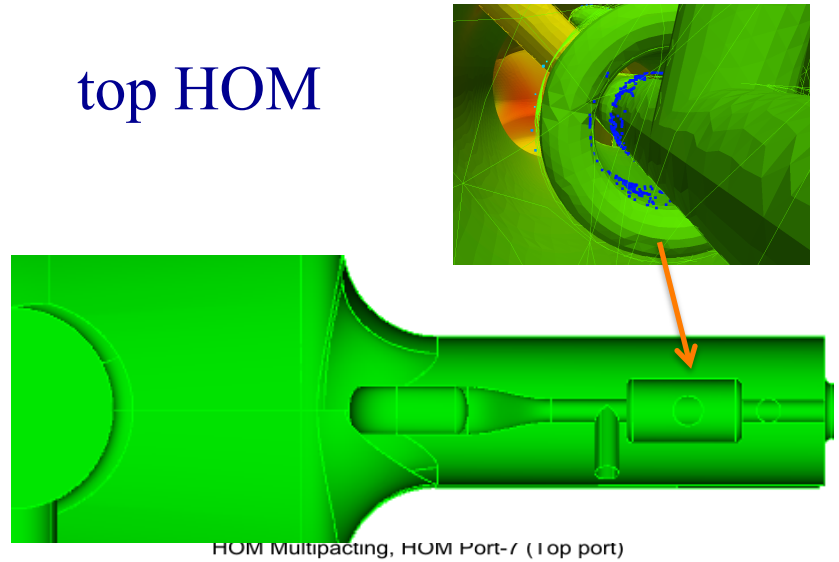

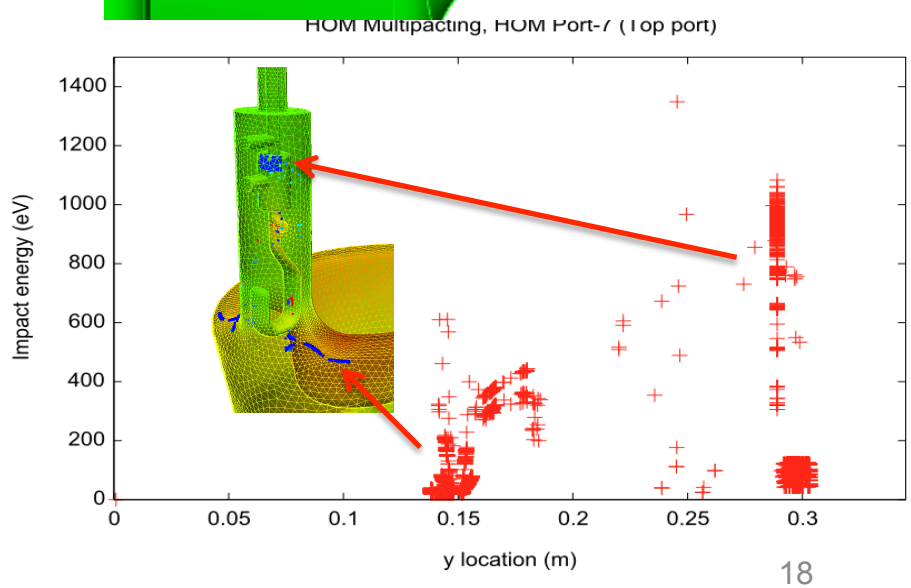

HOM Damping

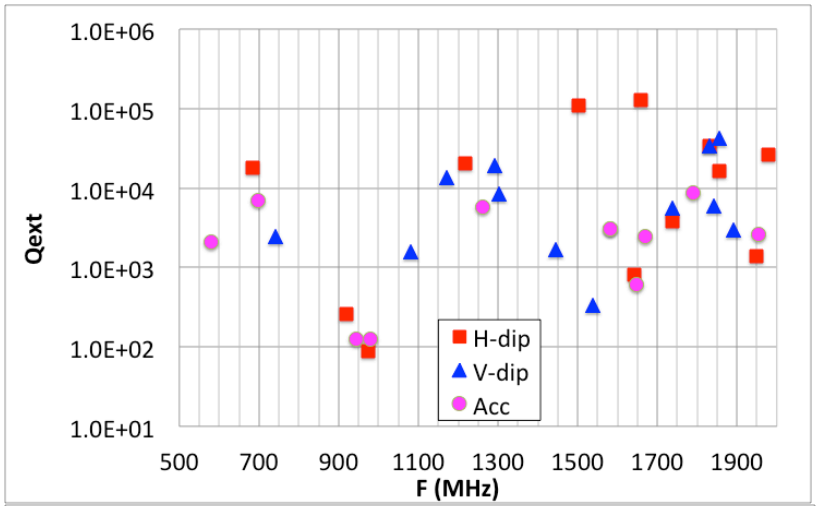

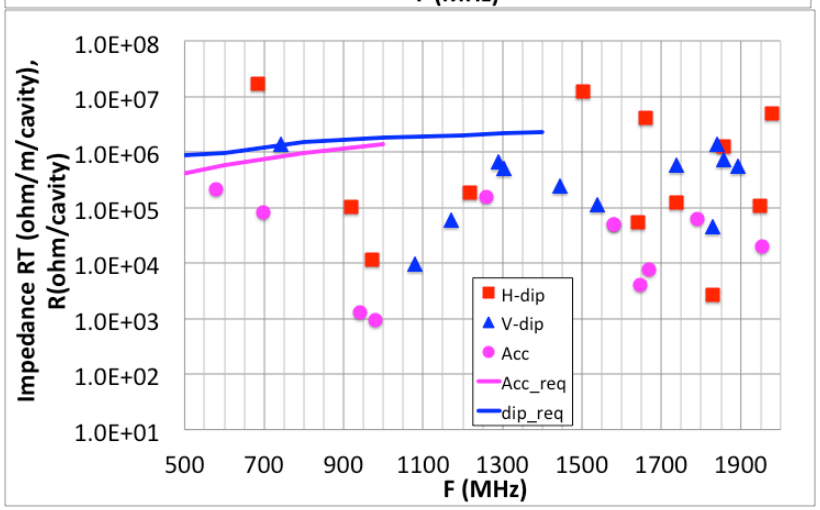

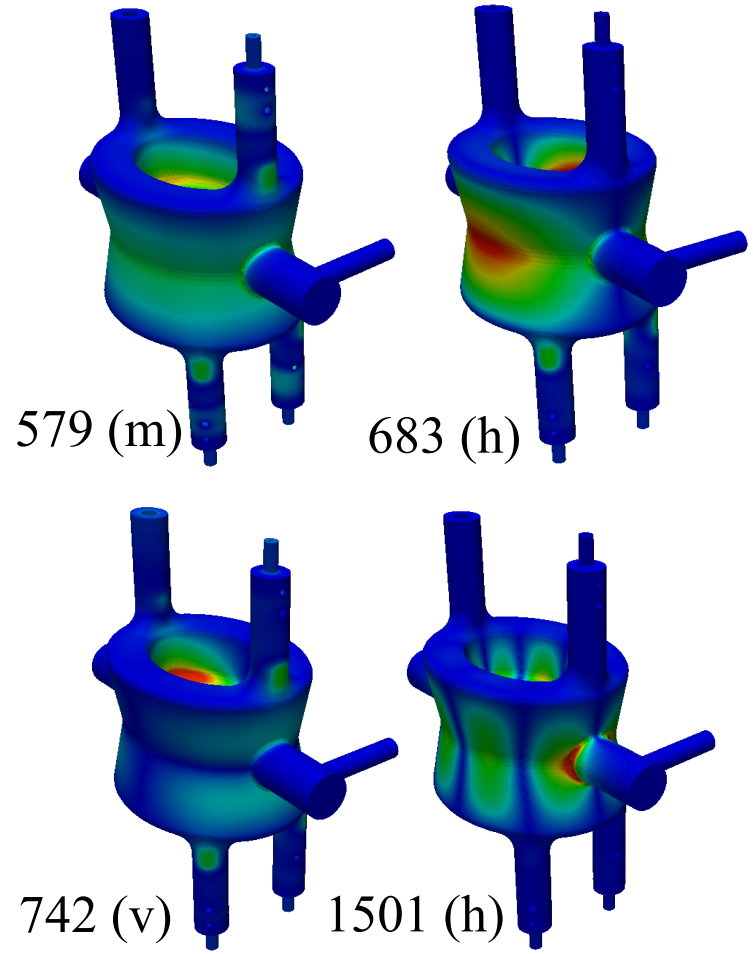

- Most of the HOMs are well damped, except a few modes may need improved damping
- Qext of deflecting mode (through HOM coupler): 9.4e9

Beam Acc HOM Power

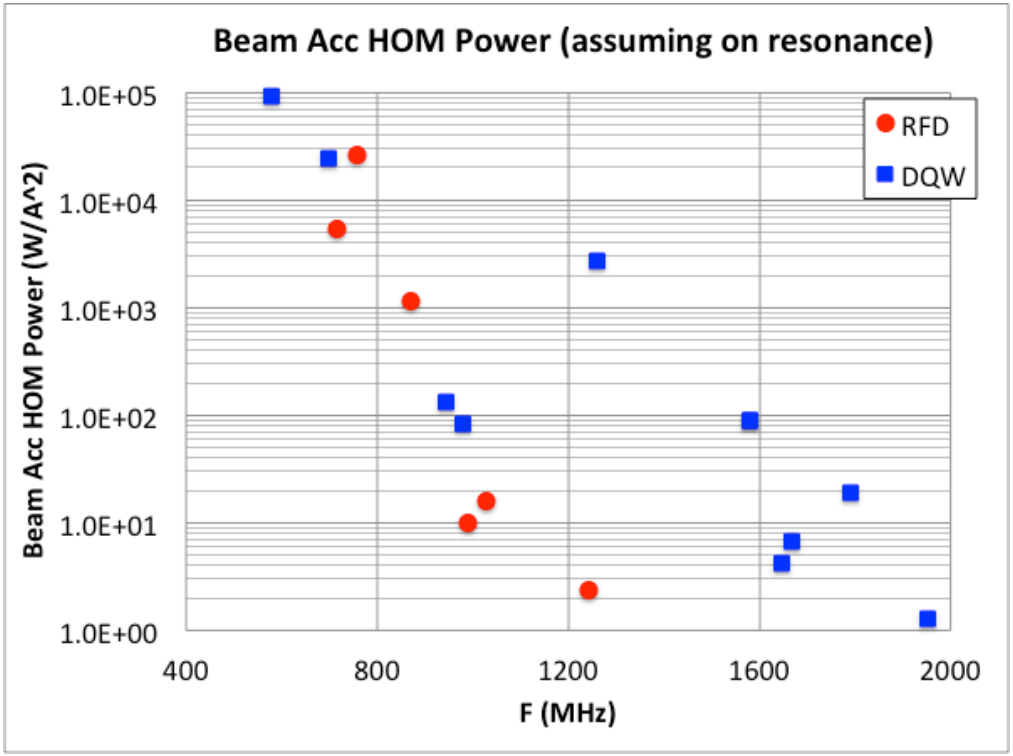

worst case, assuming beam on resonance

- Although accelerating HOM damping satisfy beam dynamics requirements, large accelerating HOM power could be generated by the beam (if on resonance, worst case)
- This plot is based on current damping Qext, assuming beam on resonance with the acc modes
- LHC-CC13 strategy was to design the cavity with the important accelerating HOMs tuned away from beam resonance to minimize the beam HOM power. Will evaluate the SPS prototype designs, implement design strategy for the LHC implementation

Summary

RFD and DQW designs have been optimized/evaluated using multi-physics solver ACE3P

- Coupler final details being optimized
- RF/mechanical simulations provided essential parameters for engineering implementation
- Multiphysics analysis helped to identify and mitigate weak points in the design stage – minimizing potential failure and reducing development cost and time
- A few areas identified that would need further improvements for the final engineering design are being addressed

Plan

- Mitigate MP and high surface field in HOM couplers.
- Finalize RF and HOM coupler designs
- Multi-physics analysis of final prototype – thermal, mechanical, Lorentz Force detuning, etc
- Evaluate any necessary geometry modifications for the prototype cavies per engineering requirements
- Design coax window, adaptors, loads
- Study effects of imperfection on multipole fields and beam dynamics
- Modeling as numerical probe, help to understand cavity test data
- Further design and optimization toward the LHC implementation. Study cavity design with a specified monopole detuning to avoid high beam power loss to HOMs

Acknowledgements

ODU/JLAB cavity team

BNL cavity team

Simulations used *ACE3P* parallel finite element multi-physics codes developed under the support of DOE SciDAC program

Simulations were carried out on supercomputers at NERSC supported by DOE Contract No. DE-AC02- 05CH11231