LBNE Cathode High Voltage Feedthrough

LBNE-doc-9153 contains the full technical design of the 35T FT and 35T filter box

Artin Teymourian,
Andrew Renshaw
Hanguo Wang,

UCLA

LArTPC14 @ FNAL
07. 09 2014

LBNE Liquid Argon TPC

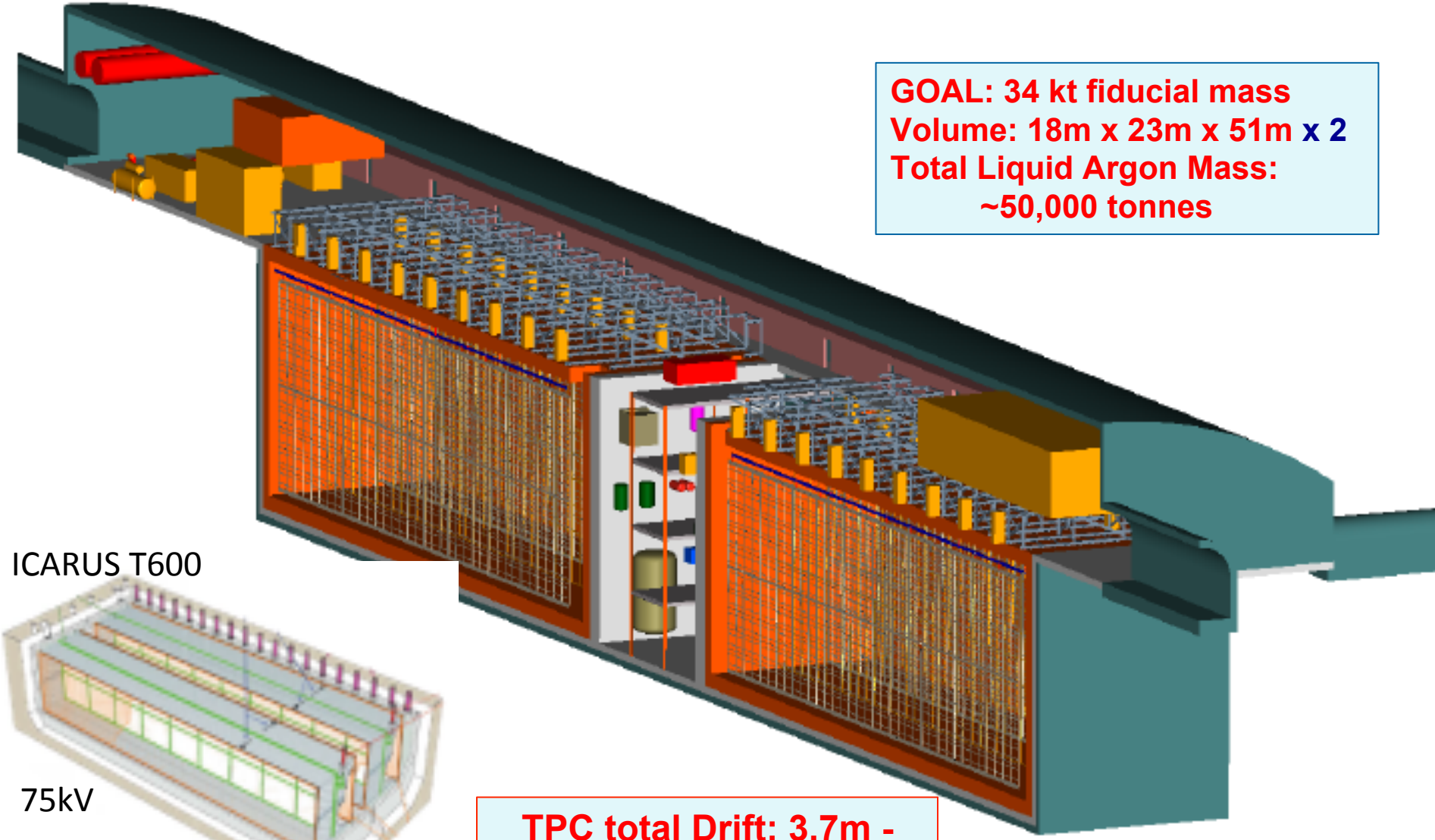

GOAL: 34 kt fiducial mass
Volume: 18m x 23m x 51m x 2
Total Liquid Argon Mass:
~50,000 tonnes

ICARUS T600

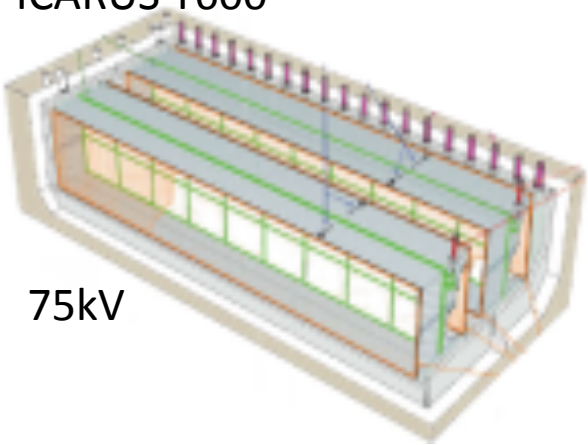

75kV

TPC total Drift: 3.7m -
185kV@500V/cm

ICARUS HV FT Concept

- Stainless Steel OD
- Stainless Steel ID
- UHMW PE insulation
- Cryofit
- large Safety factor.
  - designed for 75kV
  - operated at 150kV.

ICARUS T600

THE HIGH VOLTAGE FEEDTHROUGH

Designed by **Franco Sergiempietri**

ICARUS HV FT (left), Cable Plug (middle), Assembled (Right)

Required voltage:
75kV

Operated at 75kV on ICARUS

Tested at 150kV on ICARUS for three days at the end of the run

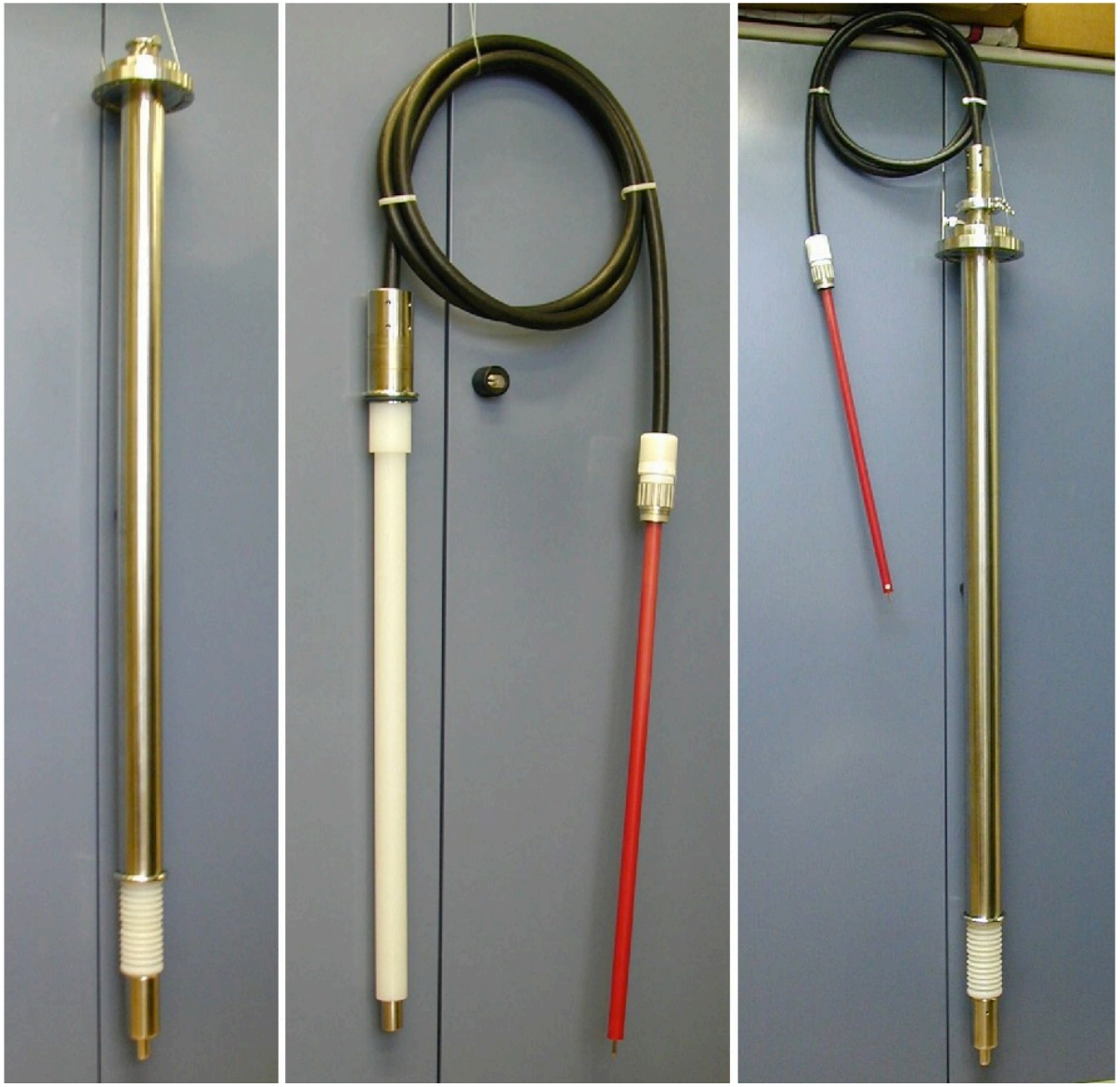

Total of 3 built at UCLA

Two were installed on ICARUS

One spare

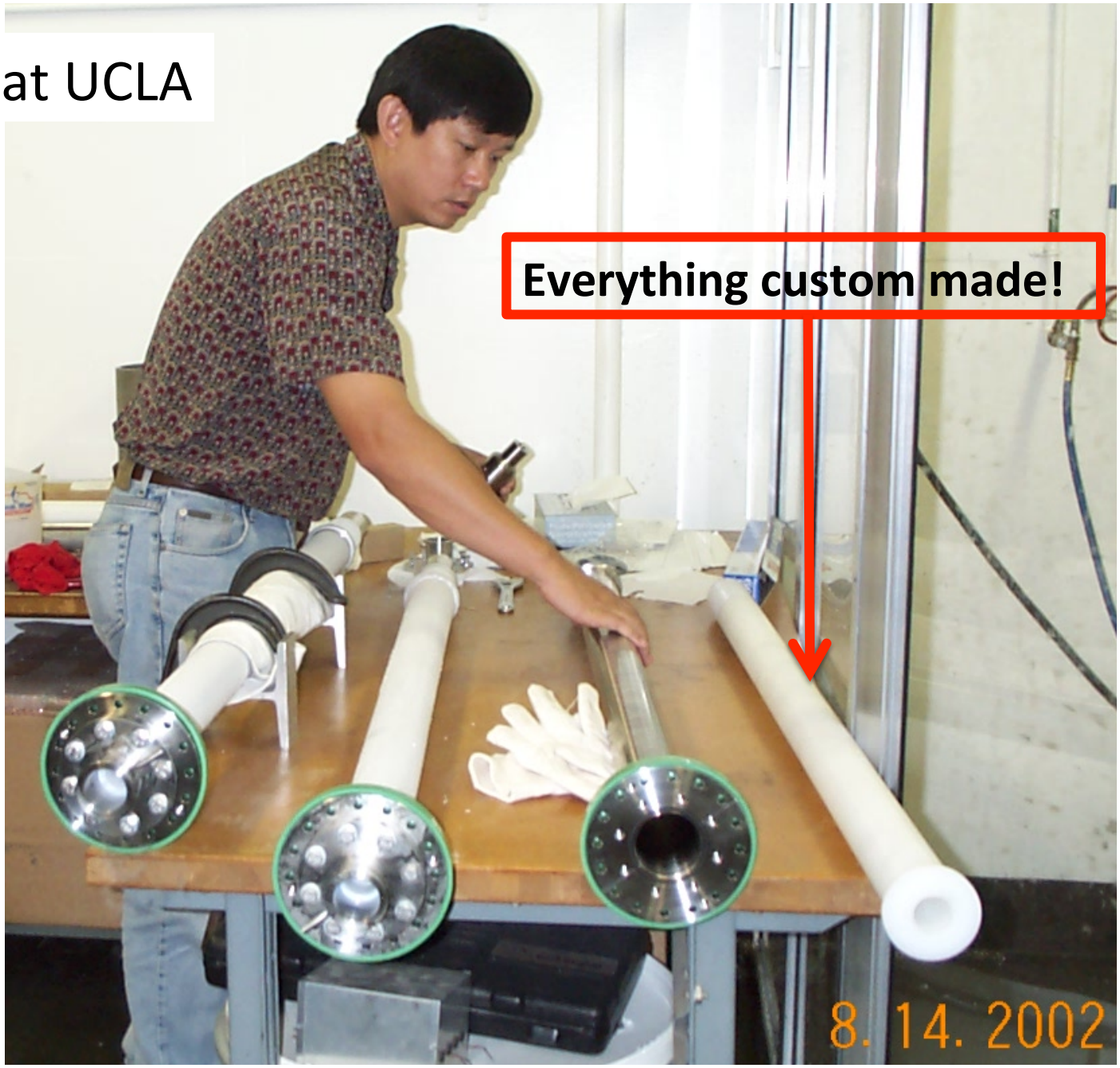

Actual Installation of the ICARUS HV FT

HV FT Removable (did once!) with spring loaded tip Connector Cup fixed on Cathode structure

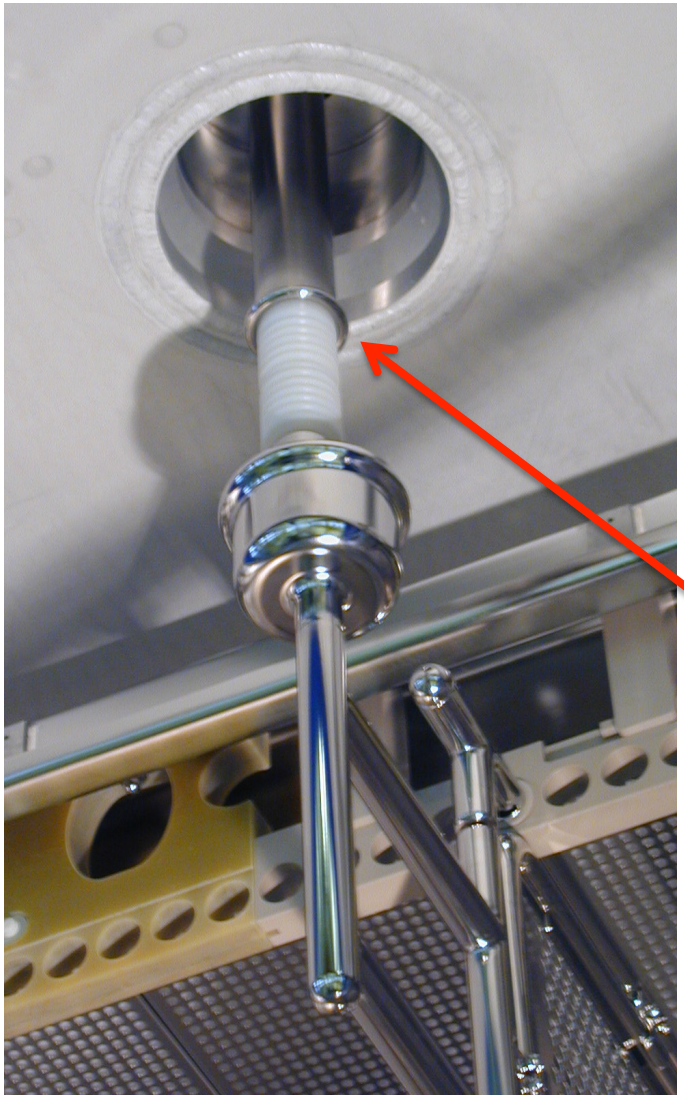

Liquid Argon level above ground OD metal

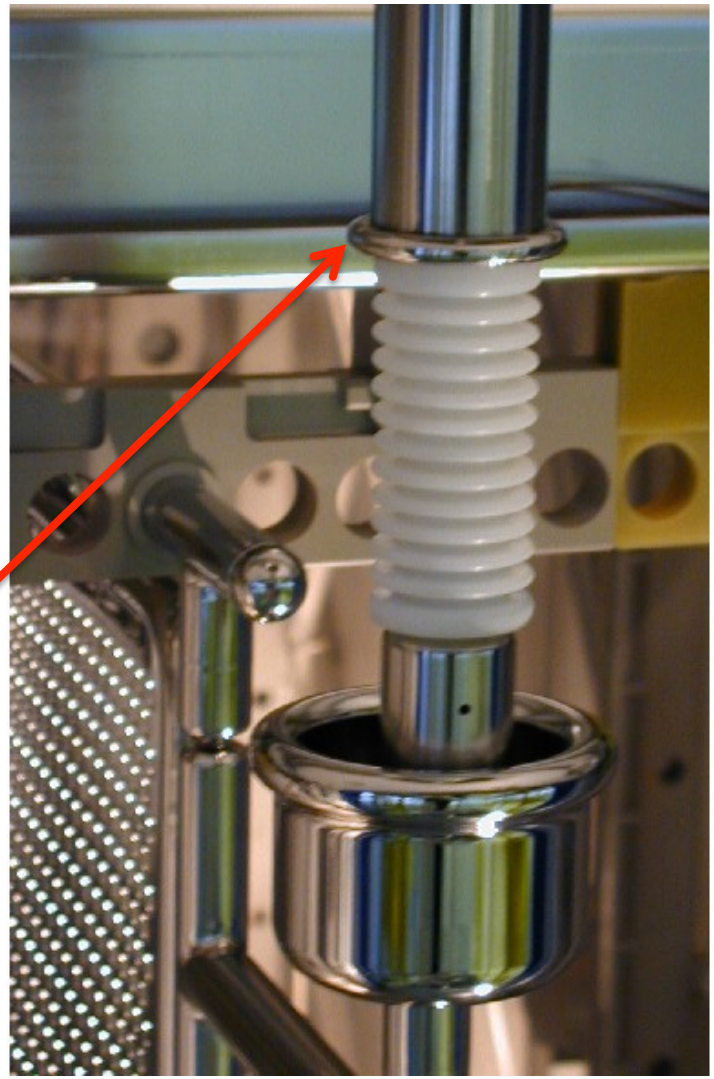

Fabricated HV FTs – very long learning curve

ICARUS, 75kV operated at 150kV
ZEPLIN II, operated at 21kV
XENON1T demonstrator, 100kV
DarkSide10, tested at 50kV, needed 36kV
DarkSide50, tested at 130kV, operating at 12.7kV
Mini-CAPTAIN, 20kV
CAPTAIN, 50kV
LBNE prototype tested at 200kV,
LBNE-35T tested at 185kV (briefly).
And many other small HV FT (SHV 5, 10, 20)

Note: if a power-supply and a matching cable exist, a matching FT can be made!

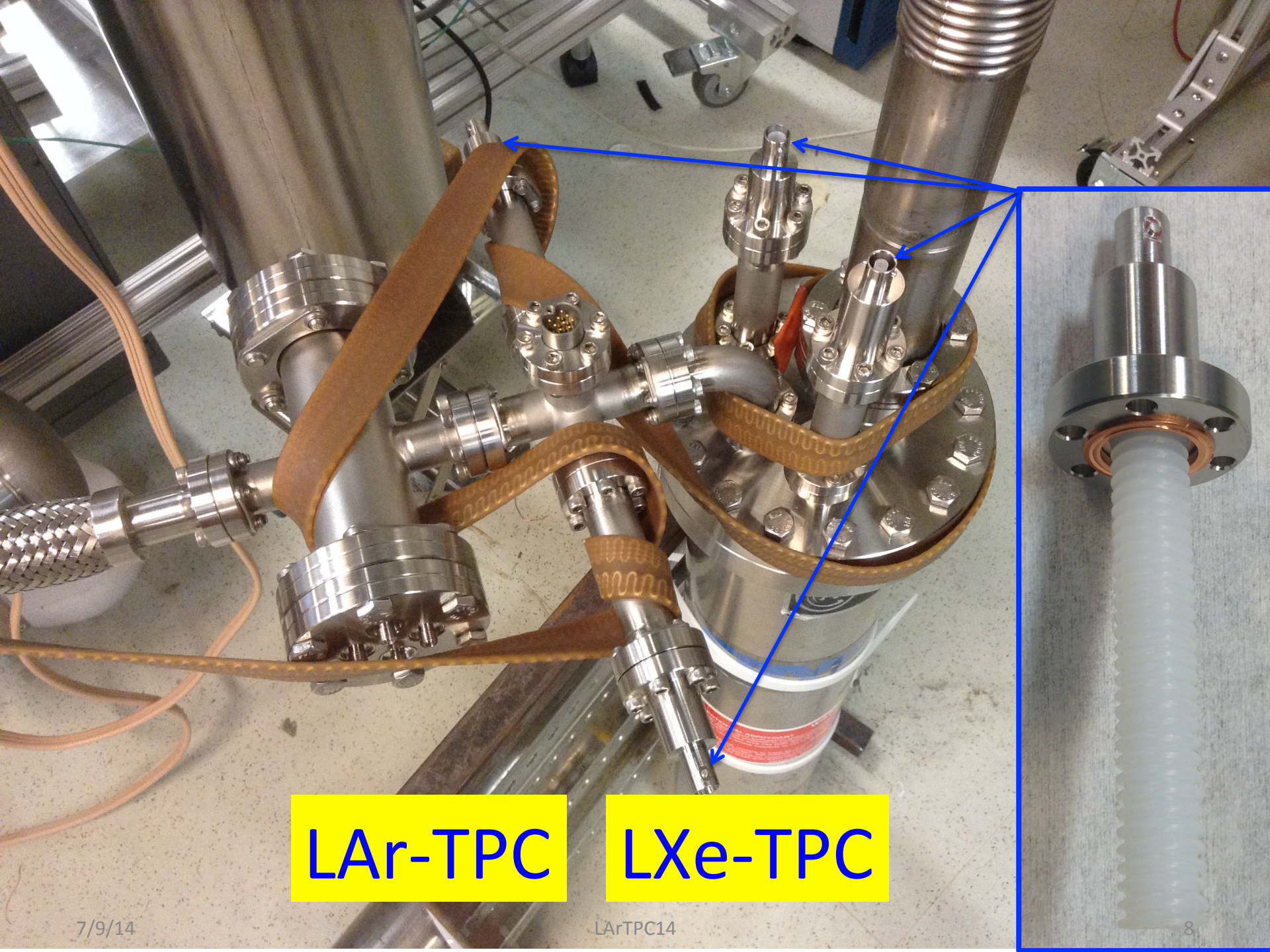
LAr-TPC
LXe-TPC

Consideration During Design of the HV FT

1. Maximum Voltage (LBNE: 185kV)
2. UH Vacuum Tight
3. Thermal load (minimized)
4. Choice of material (Low background - DM?)
5. Xe/Ar environments (Or vacuum)?
6. TPC Space constrains (Xe DM)
7. Cathode Details
8. Connection between HV FT and Cathode!

(7&8: Integral part of the whole HV problem!)

Glowing PE after Continues Breakdown in Liquid Argon During destructive test!

LBNE HV FT

1.5” OD
0.5” ID

Tested up to 140kV in open Dewar with liquid argon

200kV DC power supply
HV FT Testing system

Re-Test the ICARUS FT
at 150kV in an open mouth Dewar

BUT Sparks at Slightly Higher Voltage than 150kV!

Need New Solution!

Material Properties
dielectric strength and breakdown

1. Liquid Argon 1.1-1.42MV/cm
2. Gas Argon 0.18 relative to nitrogen gas
3. UHMW PE 900kV/cm (new data)

With HV Feedthrough directly penetrating into liquid argon, there should be no problem in theory! But in practice, almost every detector has problems!

Three main Issues:

1. Possible Gas Bubble Near High Field Regions

2. Heavy Charge Particle Induced Gas Bubble Creation Near High Field Region

3. Surface Charge Up Avalanche

A. Must map out field within entire TPC and minimize high field to below gas breakdown value.

B. Must have grooved surface to prevent charge avalanche.

If insulators are used in the TPC, insulator surface geometry must be specially designed to avoid charge migration after charged up!

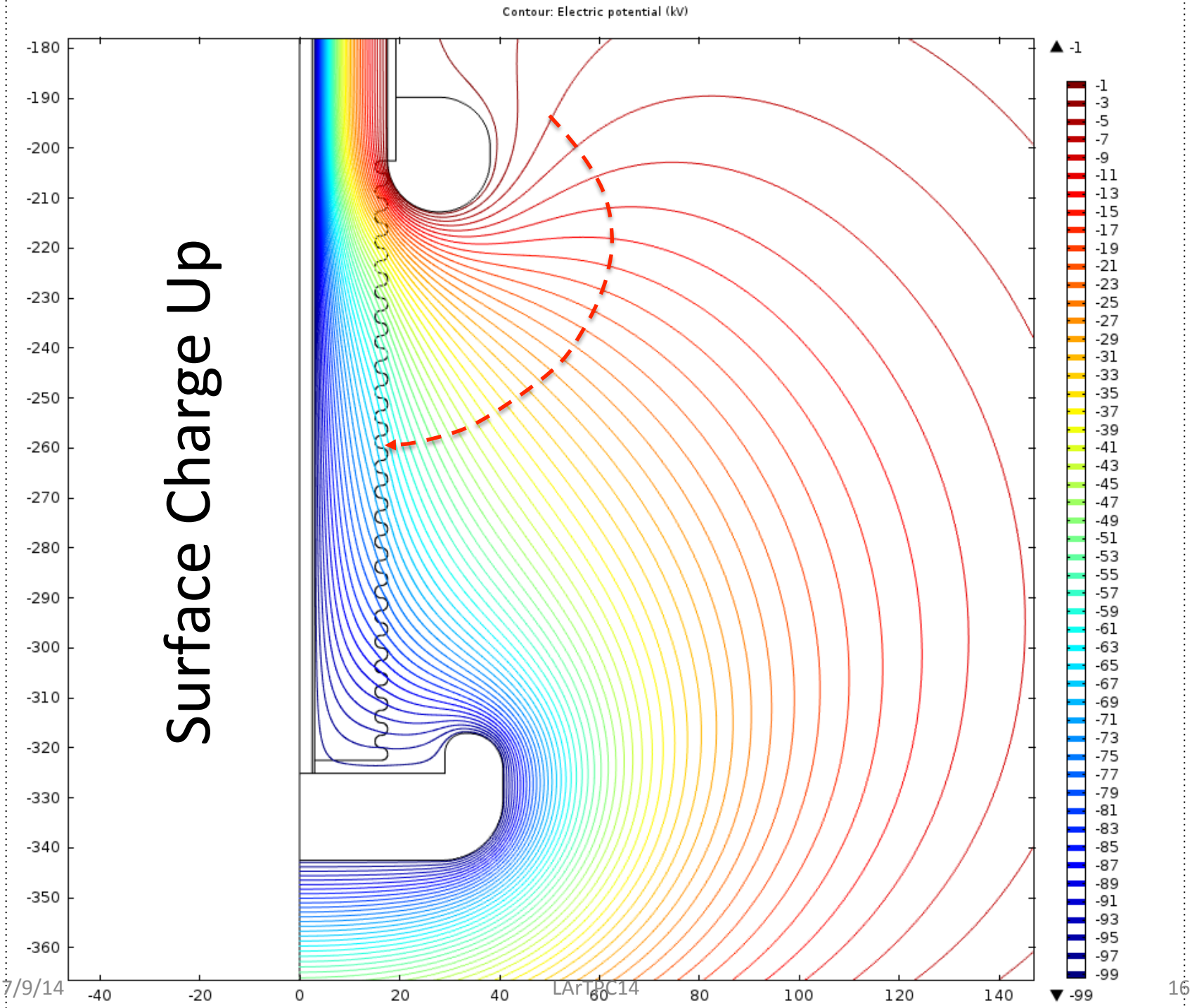
Contour: Electric potential (kV)
Surface Charge Up
-180
-190
-200
-210
-220
-230
-240
-250
-260
-270
-280
-290
-300
-310
-320
-330
-340
-350
-360
-40
-20
0
20
40
60
80
100
120
140
▲ -1
-1
-3
-5
-7
-9
-11
-13
-15
-17
-19
-21
-23
-25
-27
-29
-31
-33
-35
-37
-39
-41
-43
-45
-47
-49
-51
-53
-55
-57
-59
-61
-63
-65
-67
-69
-71
-73
-75
-77
-79
-81
-83
-85
-87
-89
-91
-93
-95
-97
-99
▼ -99

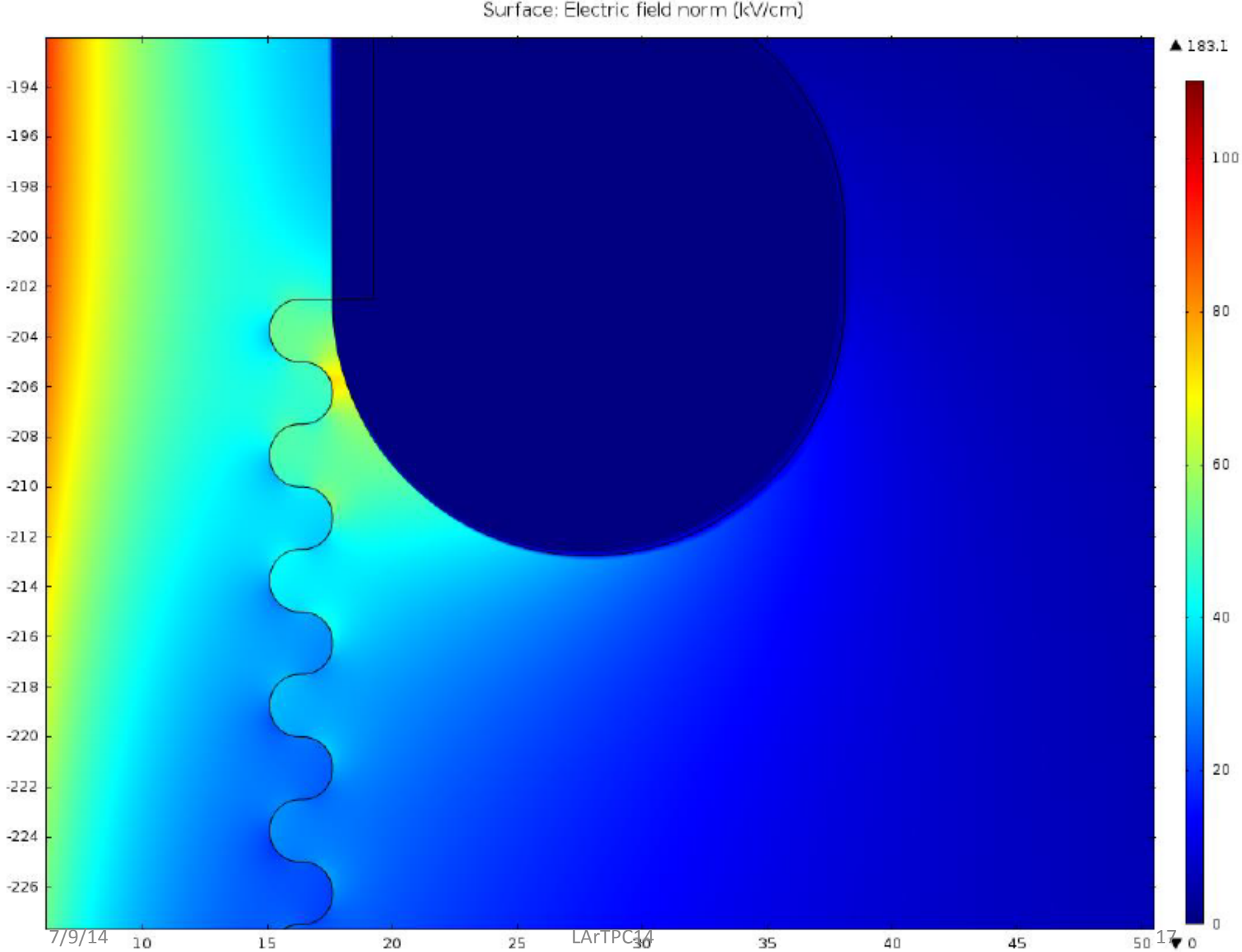
Surface: Electric field norm (kV/cm)
▲ 183.1
100
80
60
40
20
0
▼ 0
-194
-196
-198
-200
-202
-204
-206
-208
-210
-212
-214
-216
-218
-220
-222
-224
-226
10
15
20
25
30
35
40
45
50

A possible way to relax the maximum field strength on the OD Surface

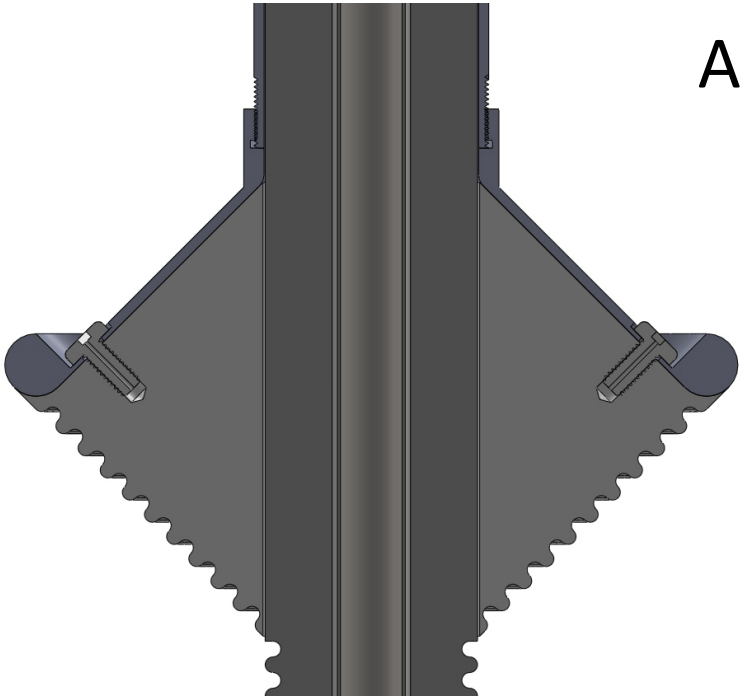

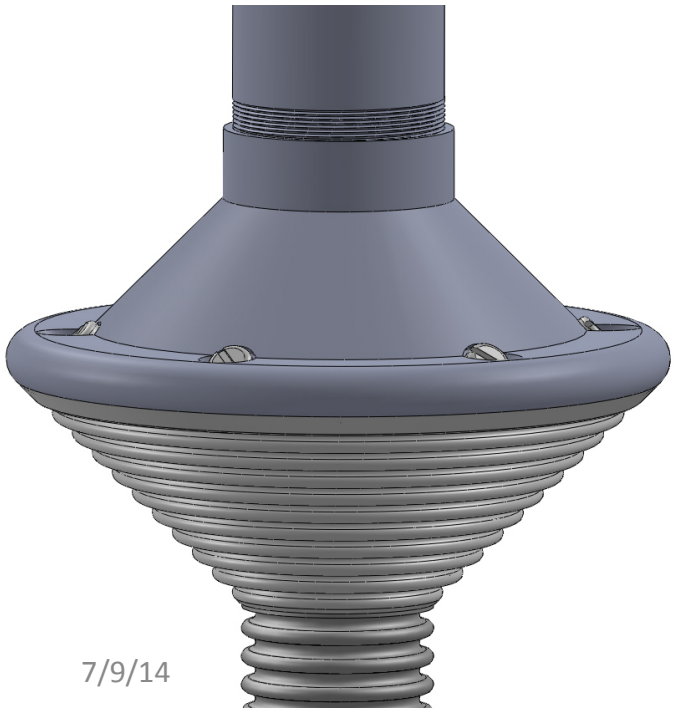

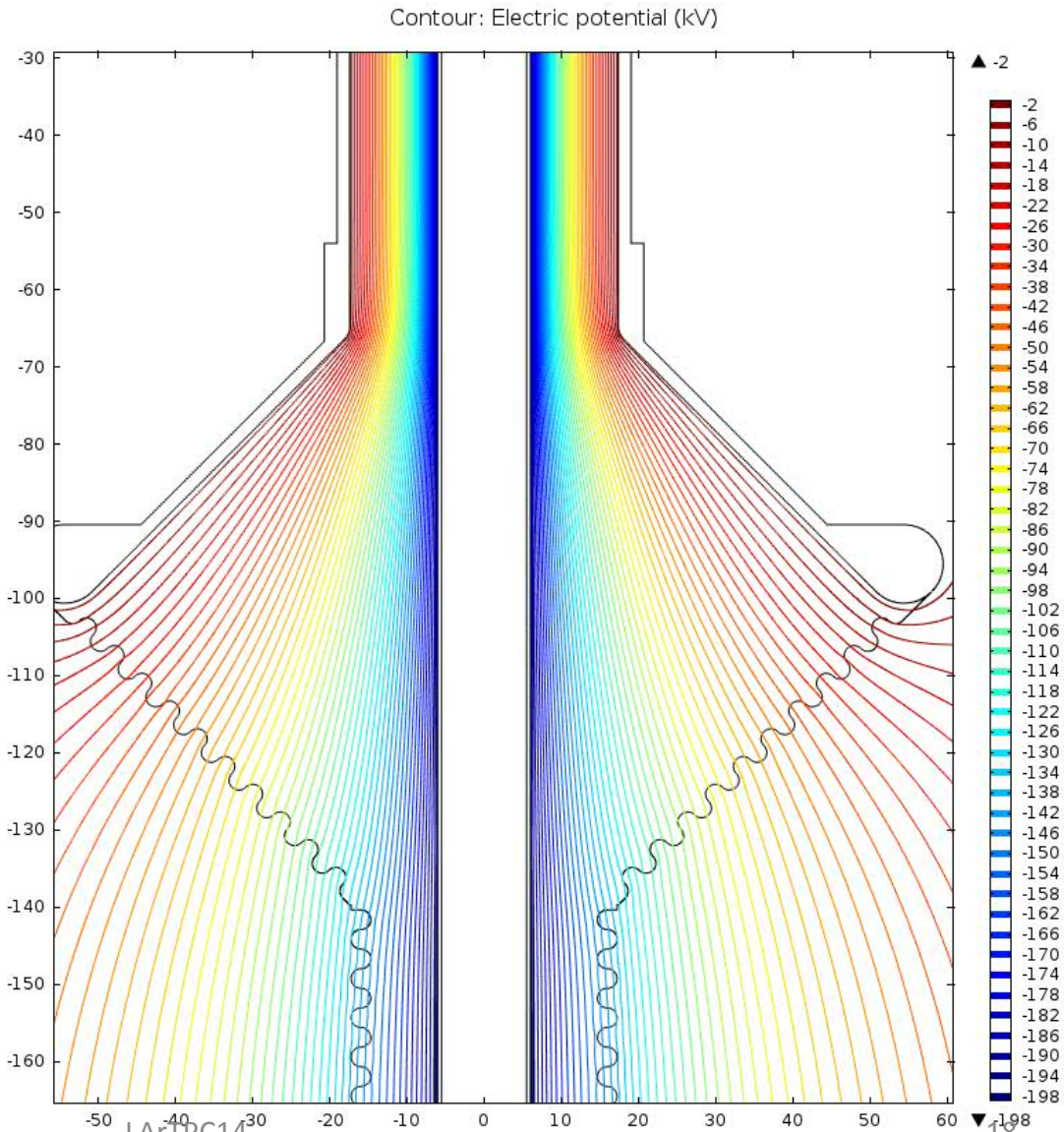

A possible way to relax the maximum field strength on the OD Surface

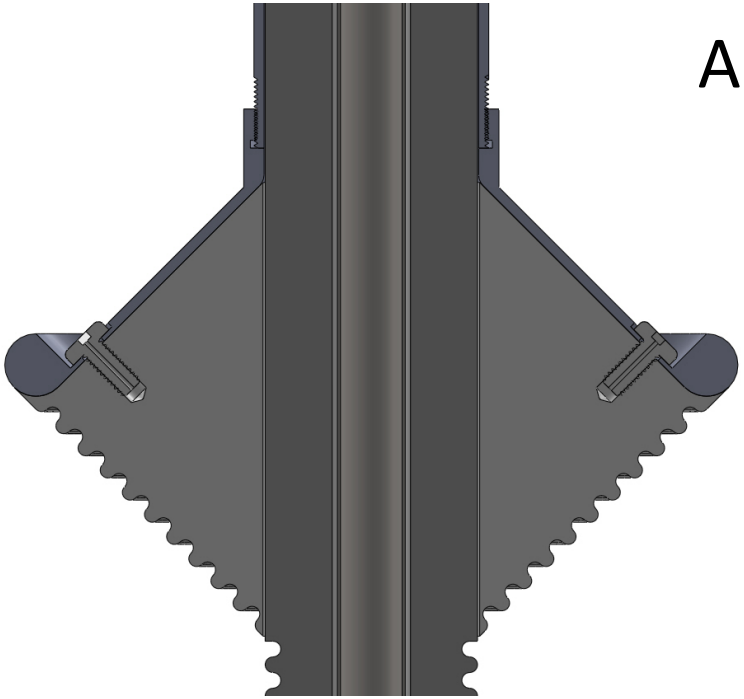

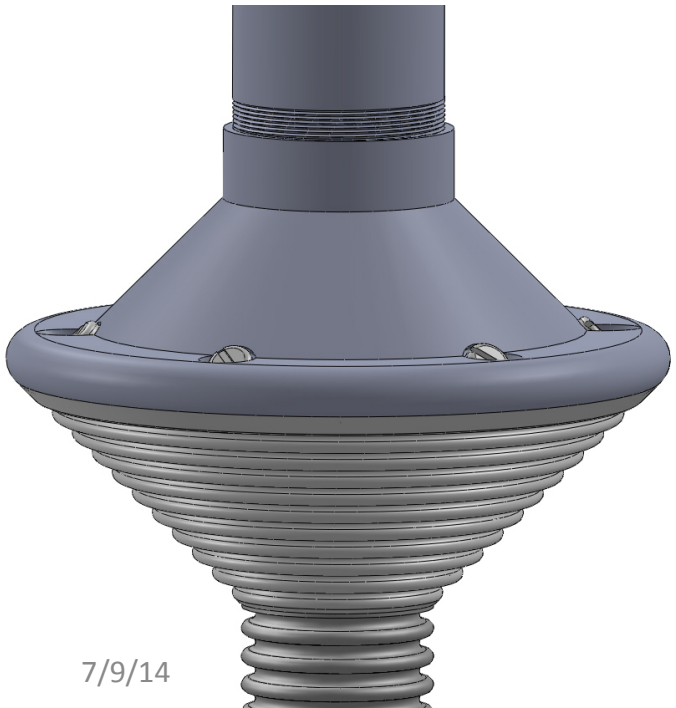

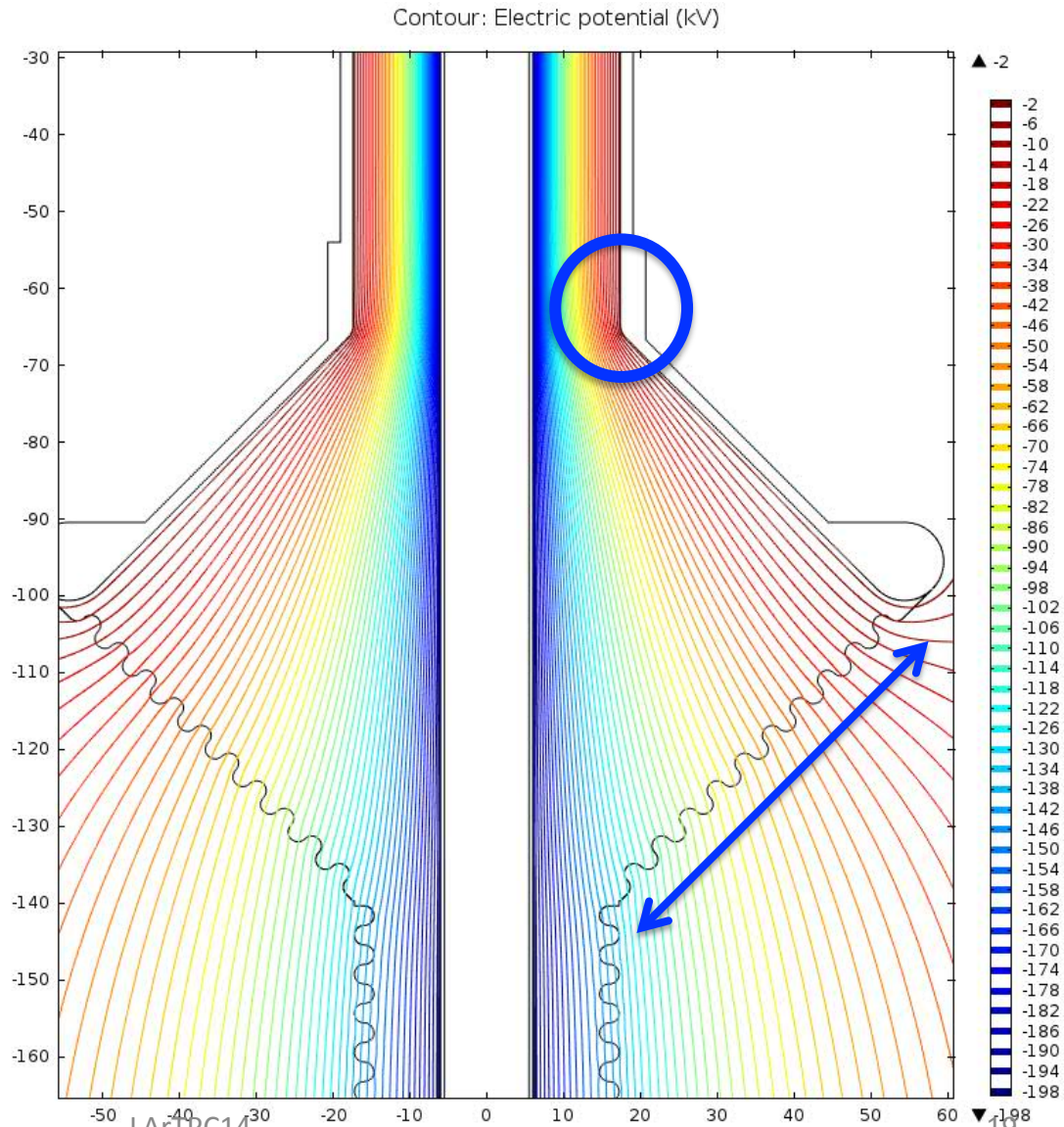

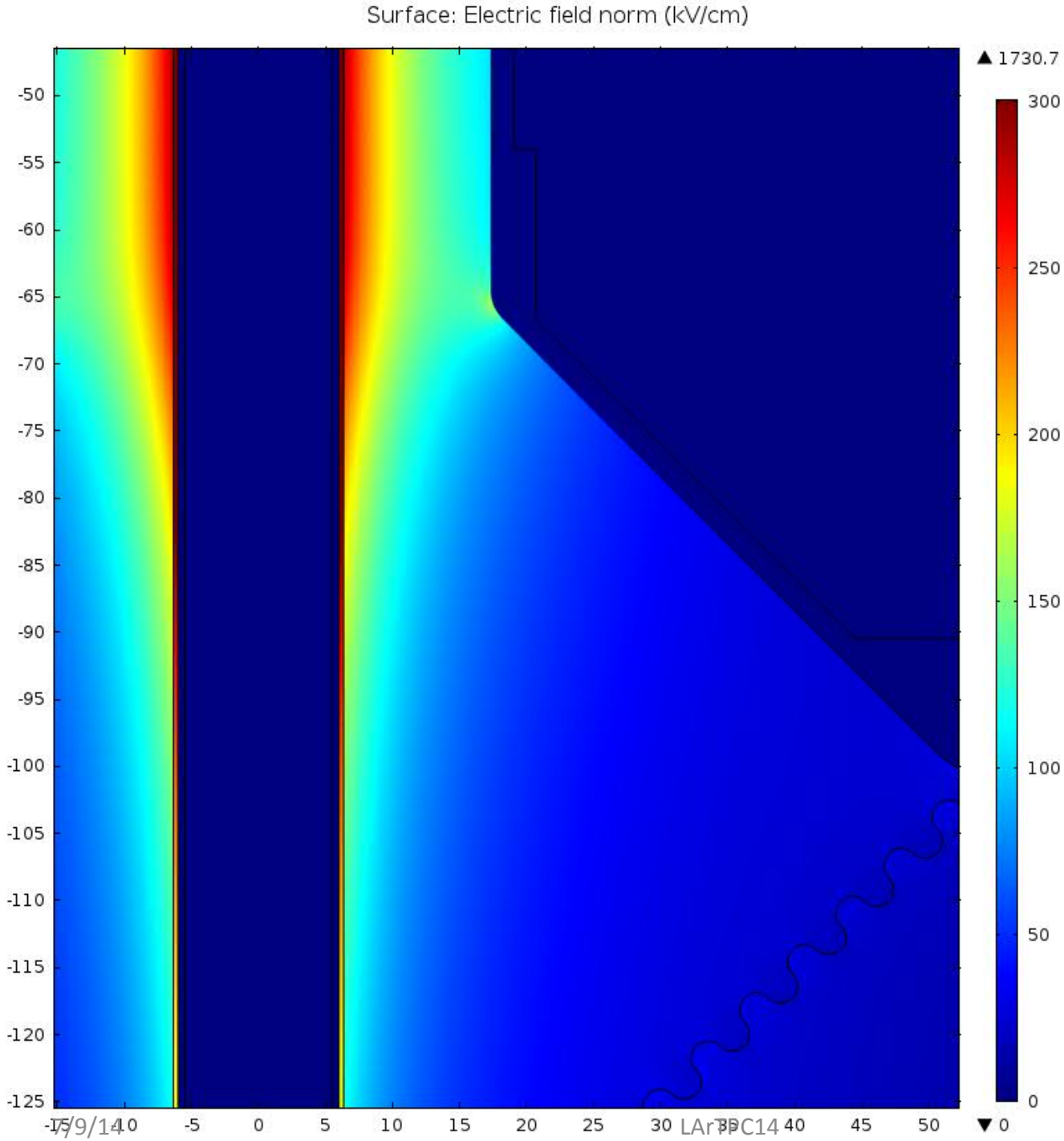

Field Strength Map

To limit maximum field strength on surface

1.37-inch OD PE @500-kV

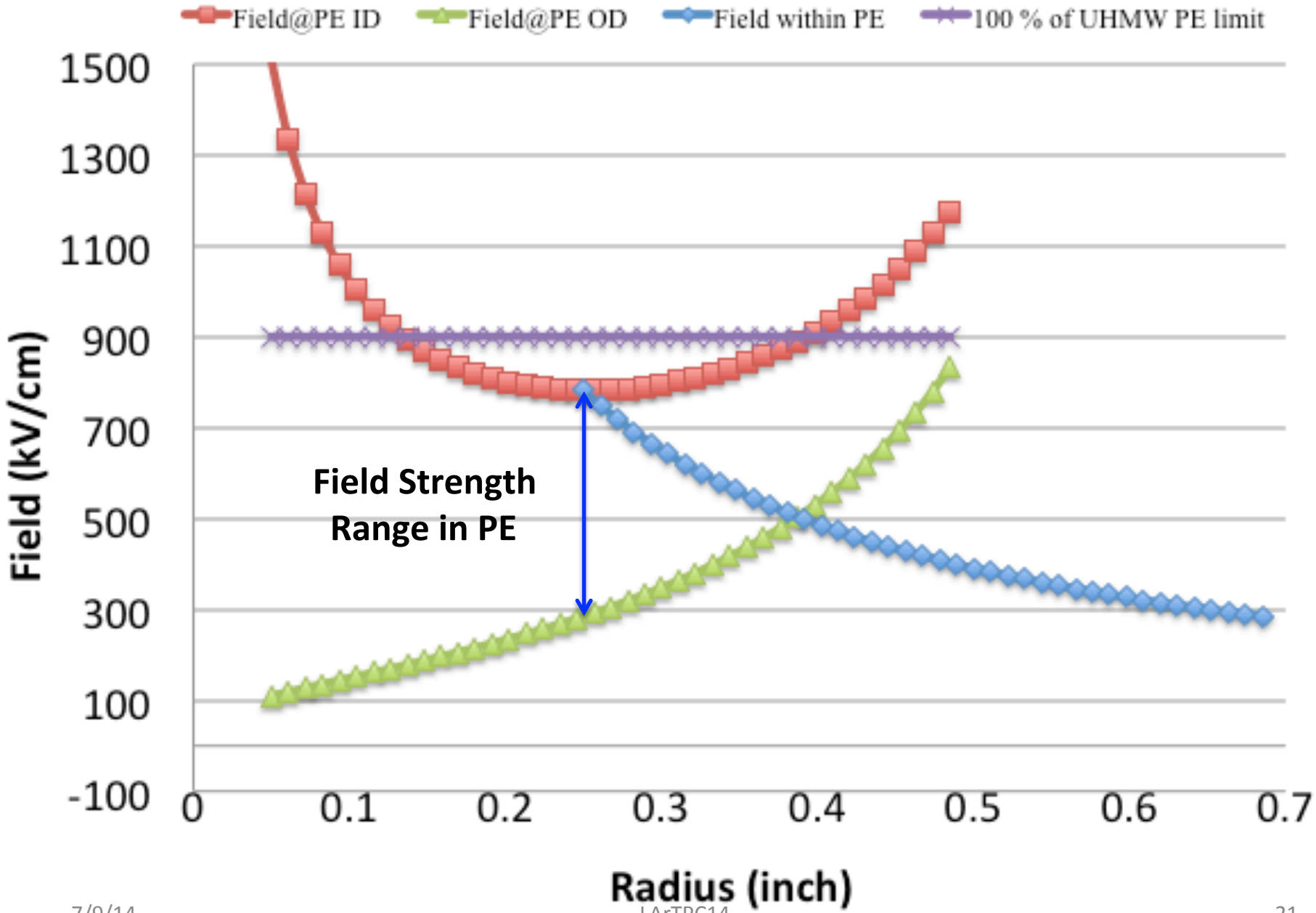

1.37-inch OD PE @185-kV (LBNE)

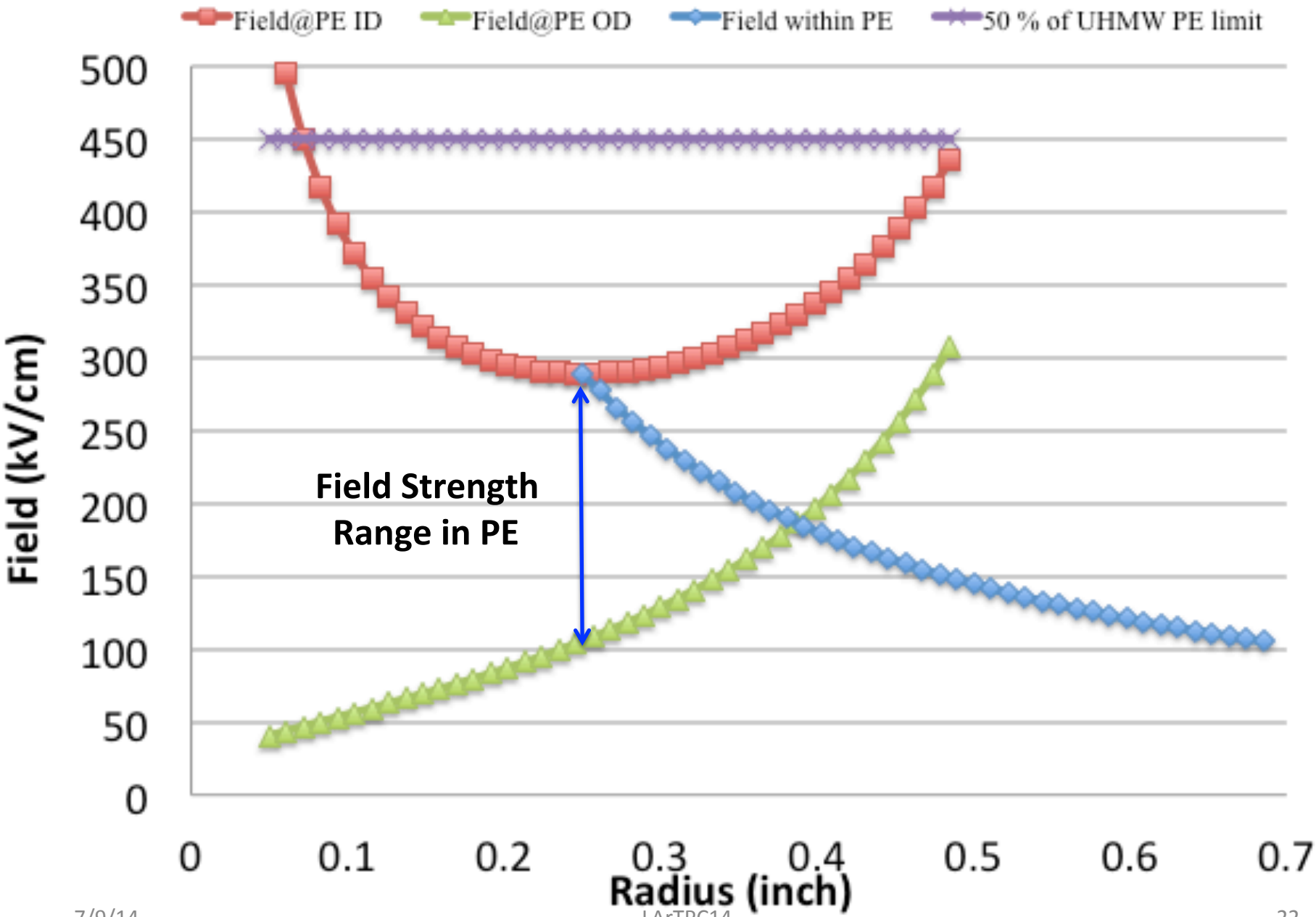

Modified Tip (Argon side connection)

1.5” OD

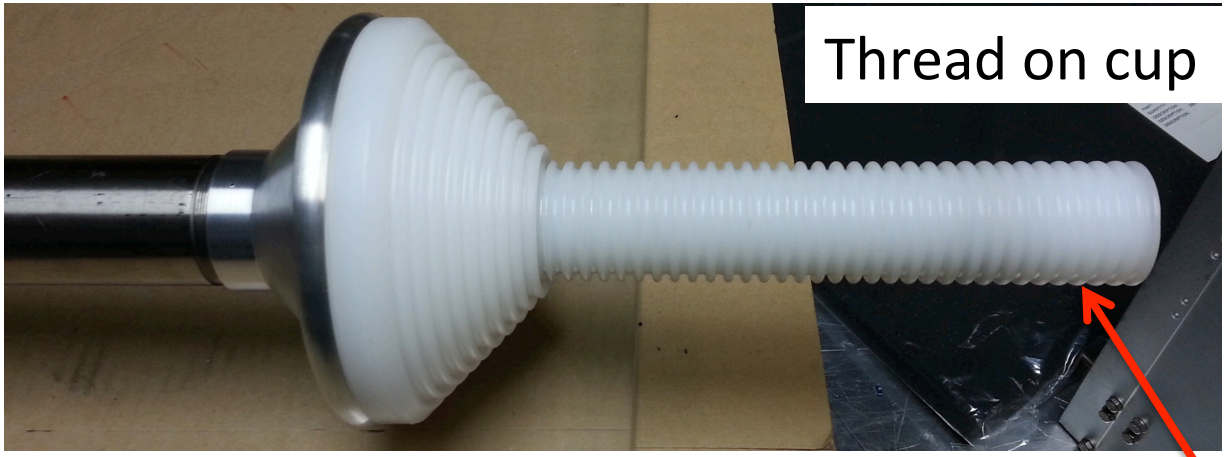

200kV DC power supply HV FT Testing system

In liquid Argon closed Dewar

Modified HV FT Tested at 200kV without any issue between 6-9psi

200kV DC power supply HV FT Testing system

In closed Dewar with unpurified liquid Argon

Modified HV FT Tested at 200kV without any issue between 6-9psi

Later discovered that the flare was in gas phase when sparking at 6psi

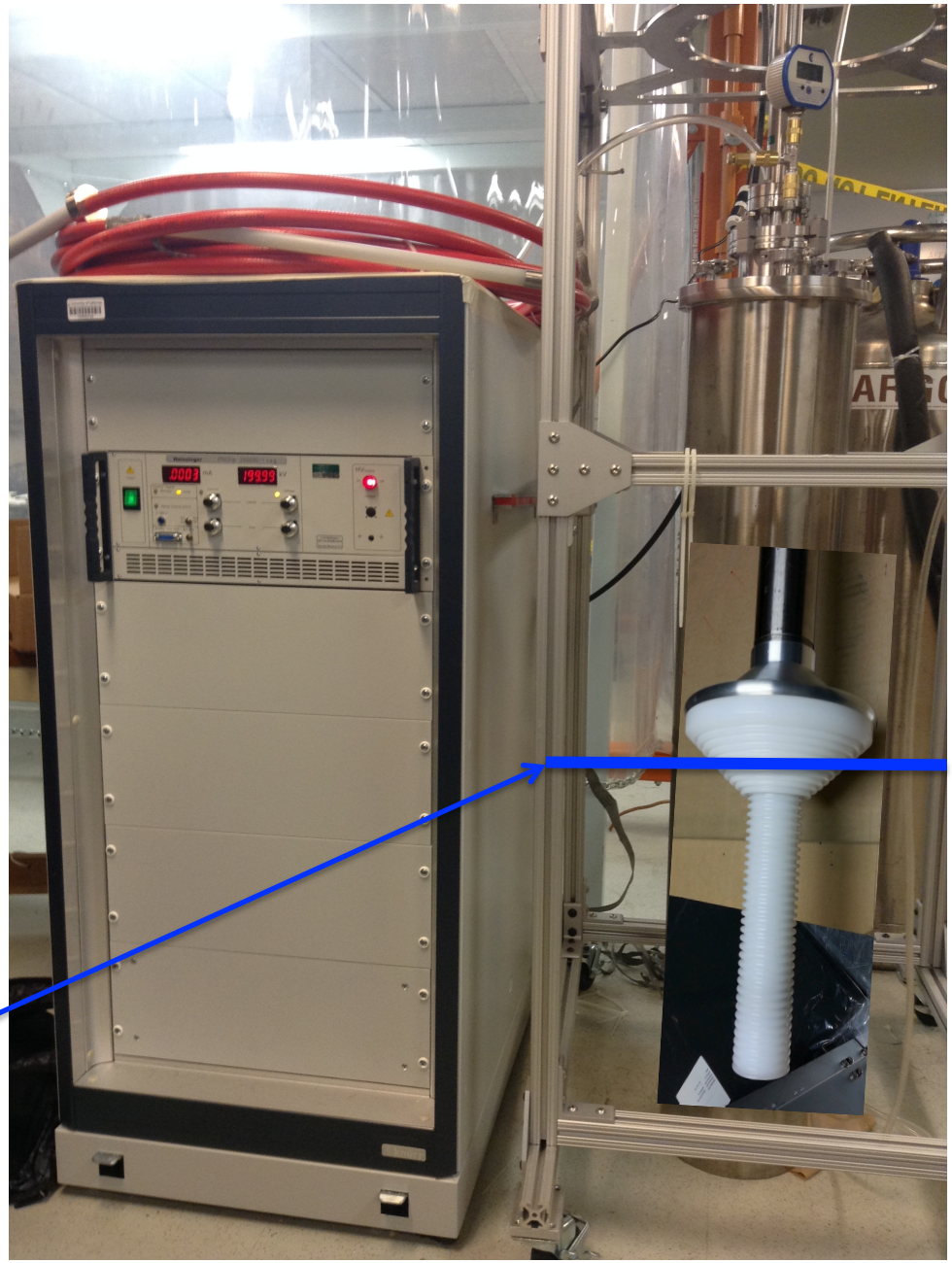

The LBNE 35T HVFT Design - 1

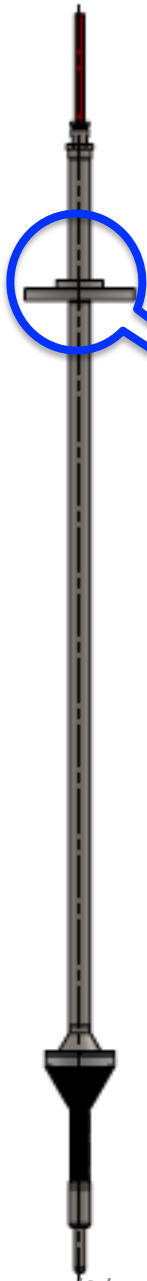

0.435” thick UHMWPE
Material can stand 185kV at the central conductor and ground at the outer with 200% margin

1.25” CryoFit Vacuum Seal

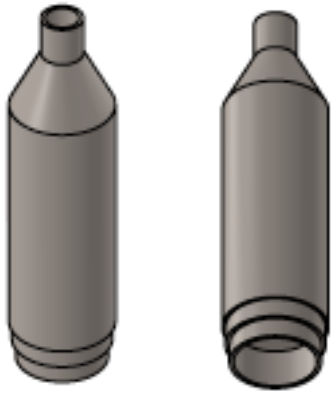

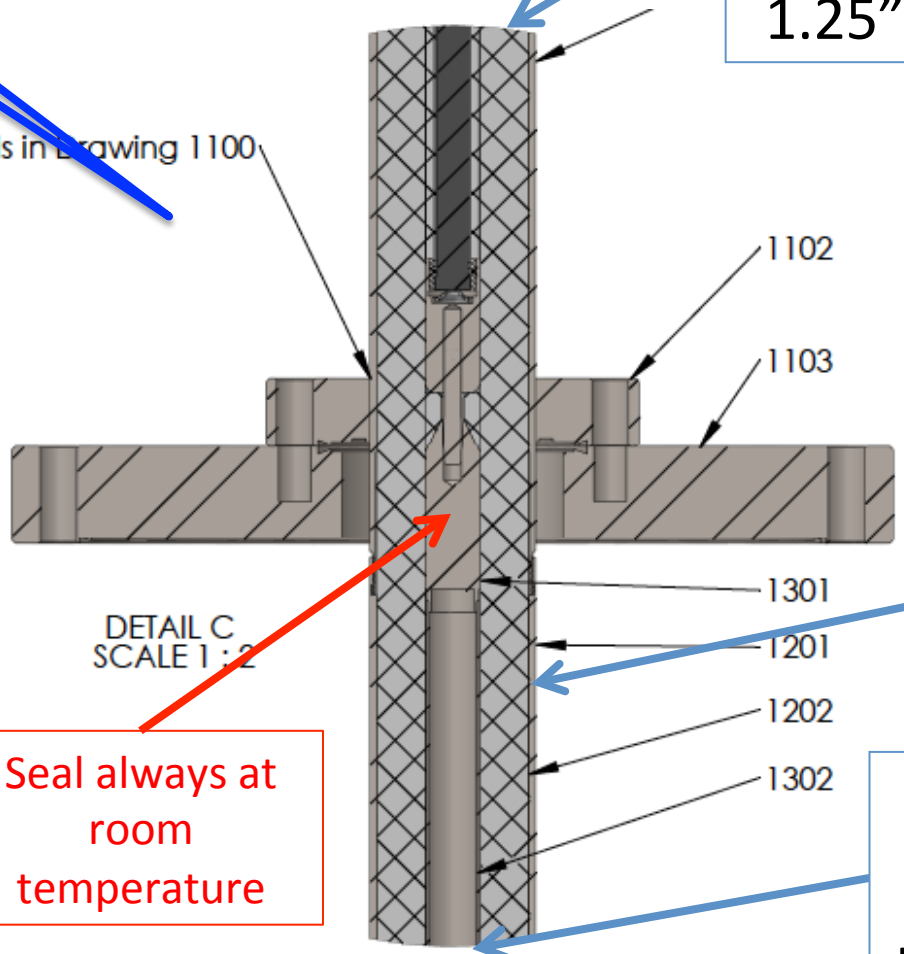

1.5” OD SS tube for ground, thinned to reduce heat load

Seal always at room temperature

0.5” OD SS tube for HV, hollow to reduce material, filled with Ar

35T HVFT Design-2

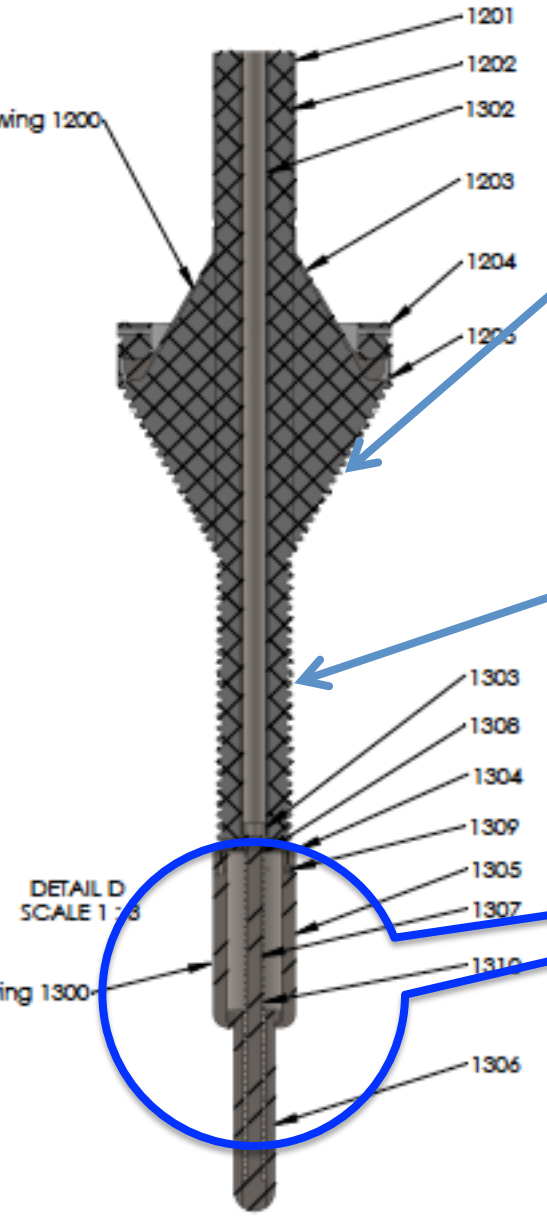

Flared ground to reduce field strength on OD surface.

UHMWPE extends ~ 4”
Grooved to prevent leakage of surface charge.

Spring Loaded SS Tip
3” travel

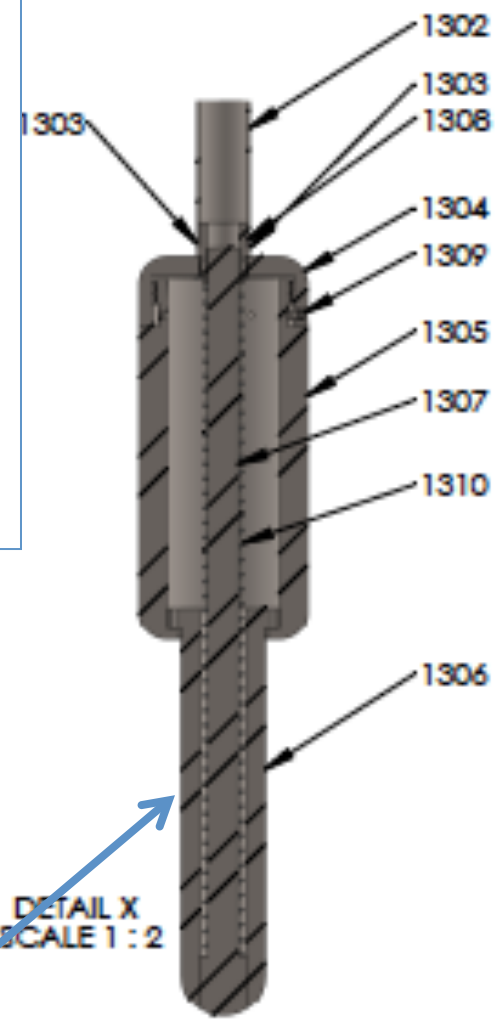

Improved Cable Plug Design

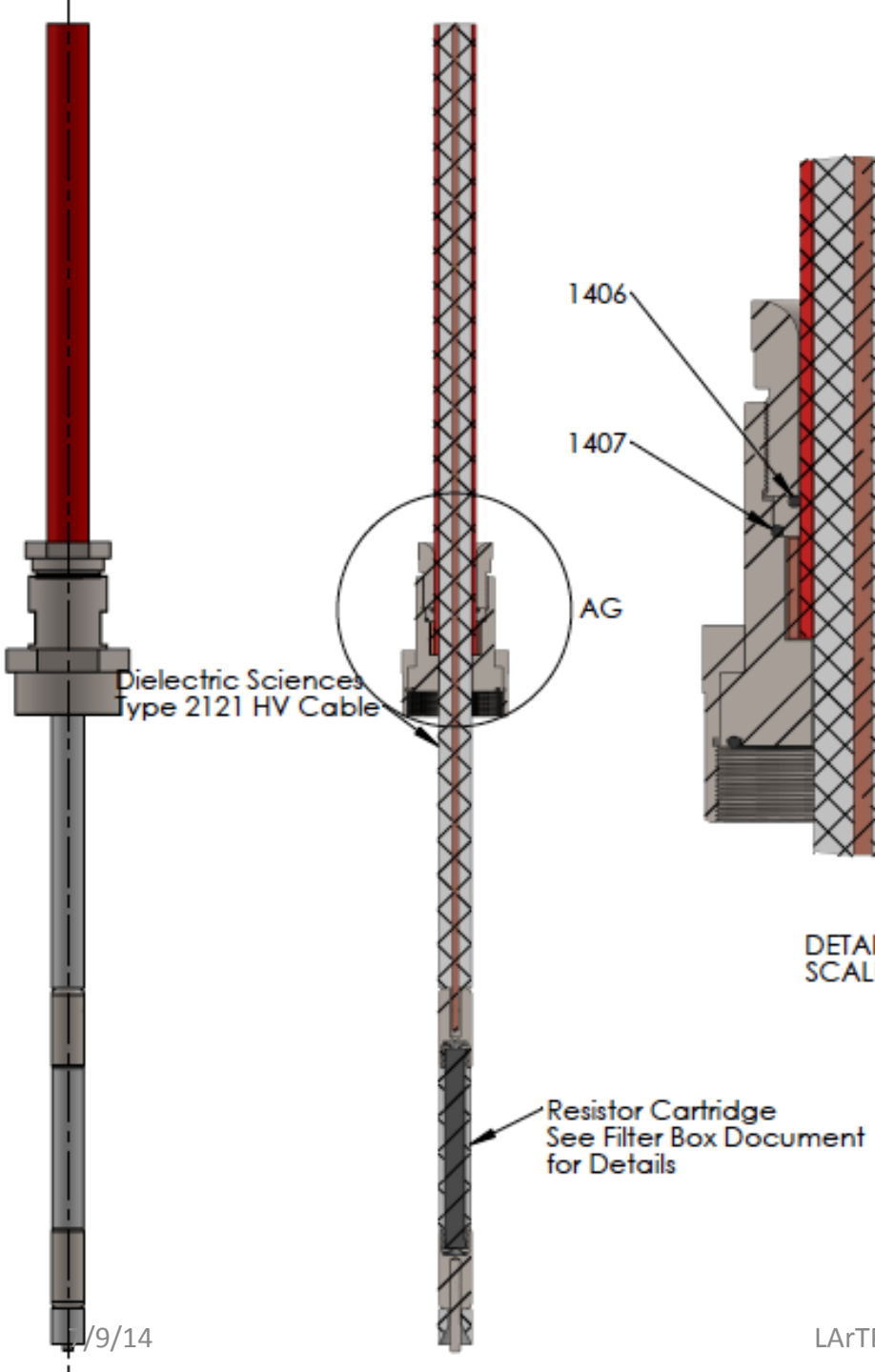

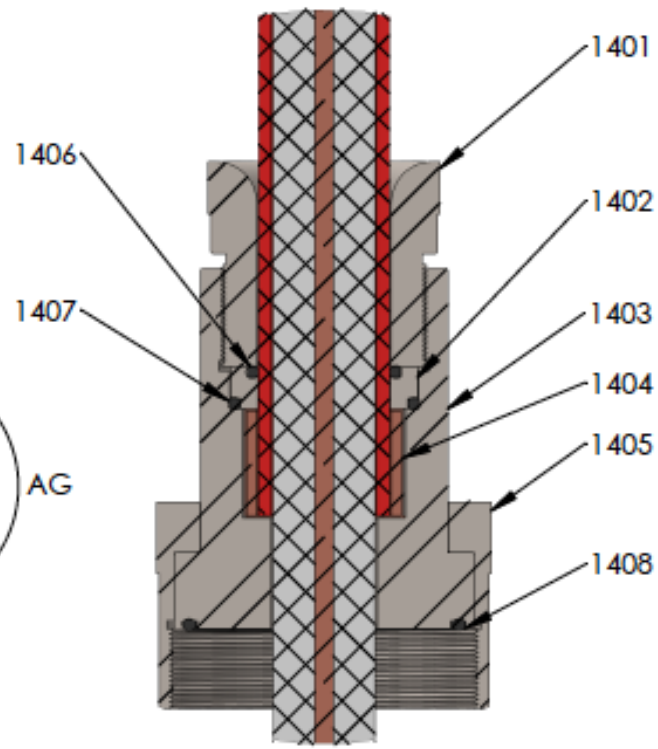

DETAIL AG
SCALE 1 : 1

Moisture tight permanent plug

Integrated filter resistor On Cable Plug

LBNE 35T HV FT Tip

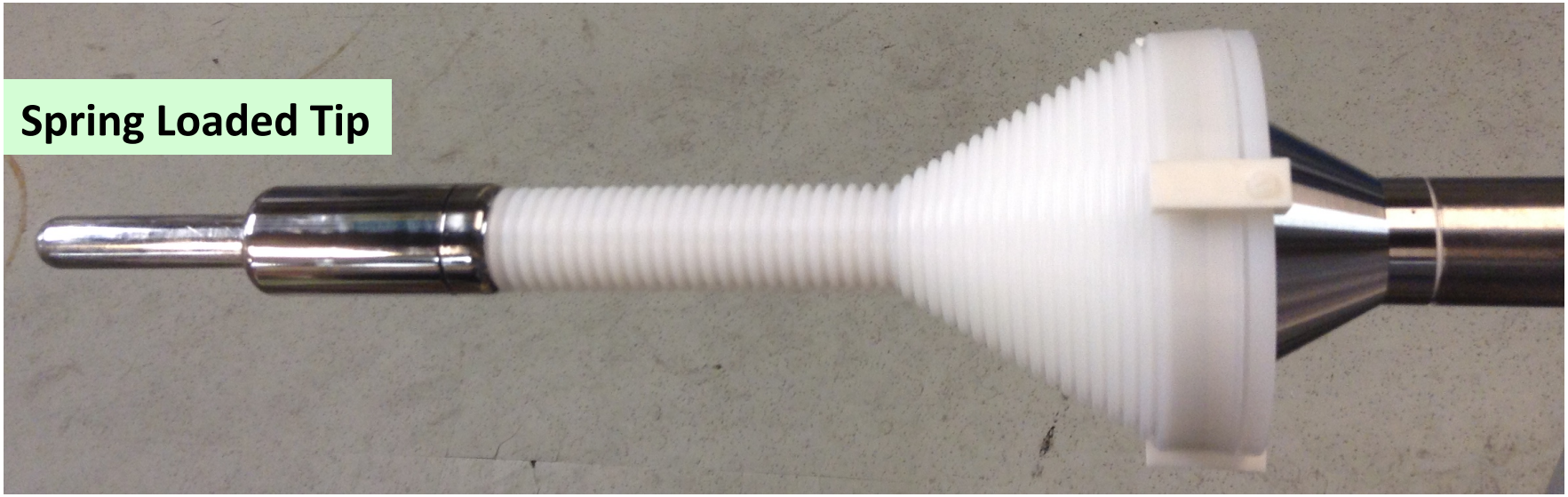

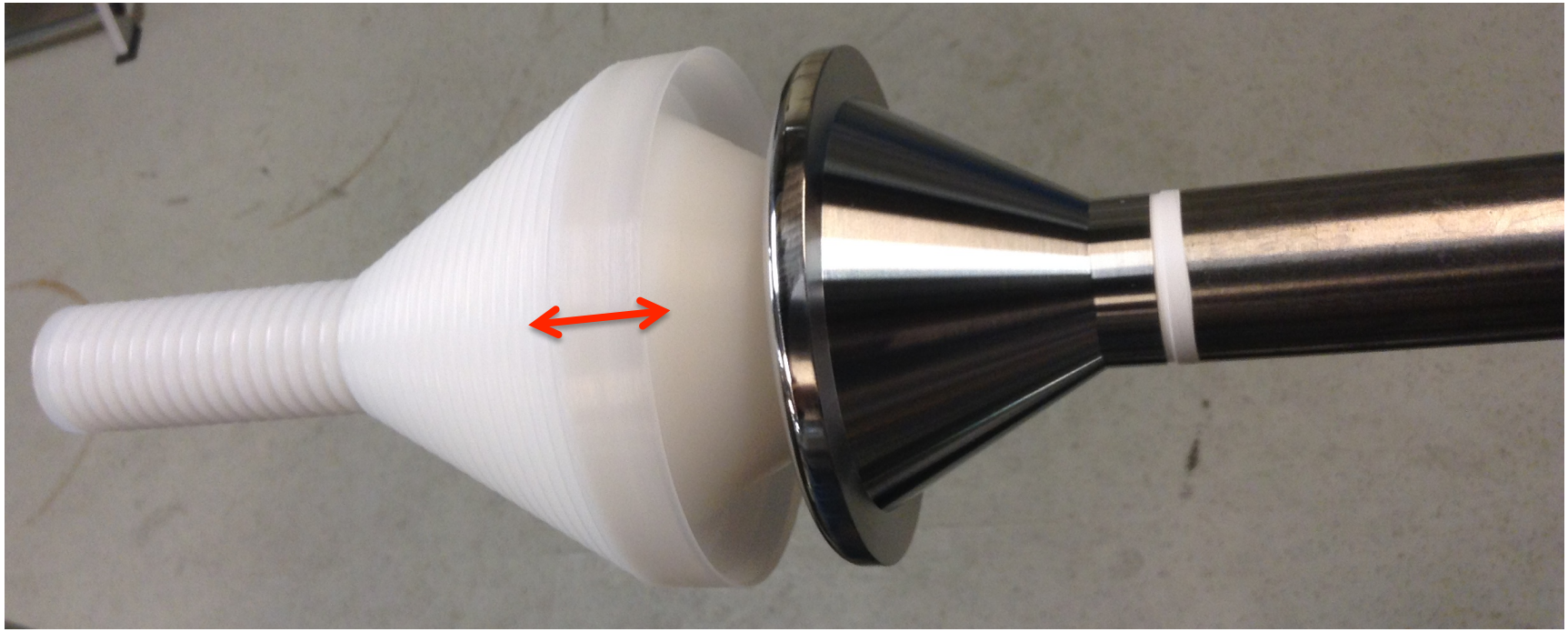

Ground Flared Out

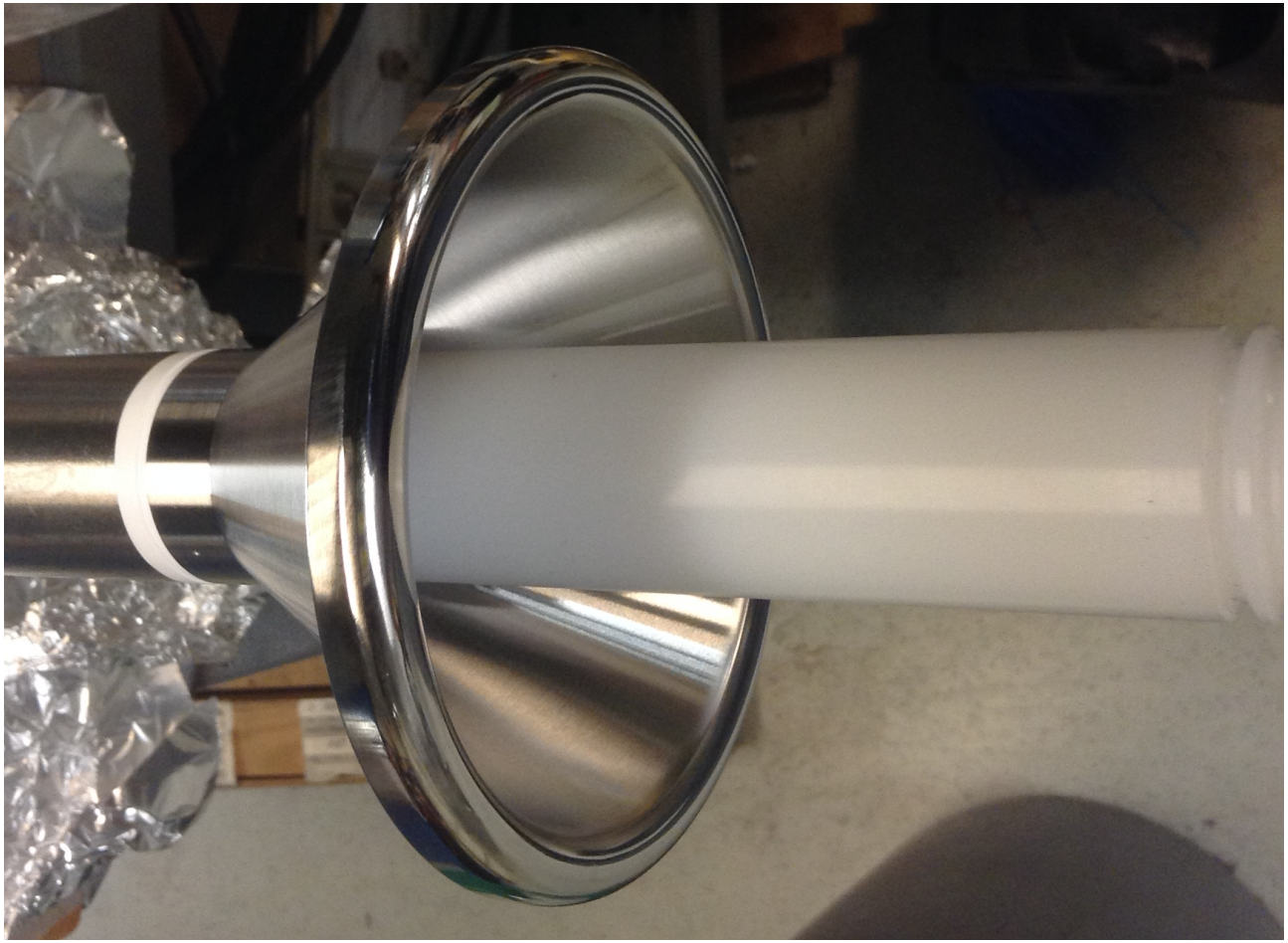

Preparing LBNE 35T HV FT Tests

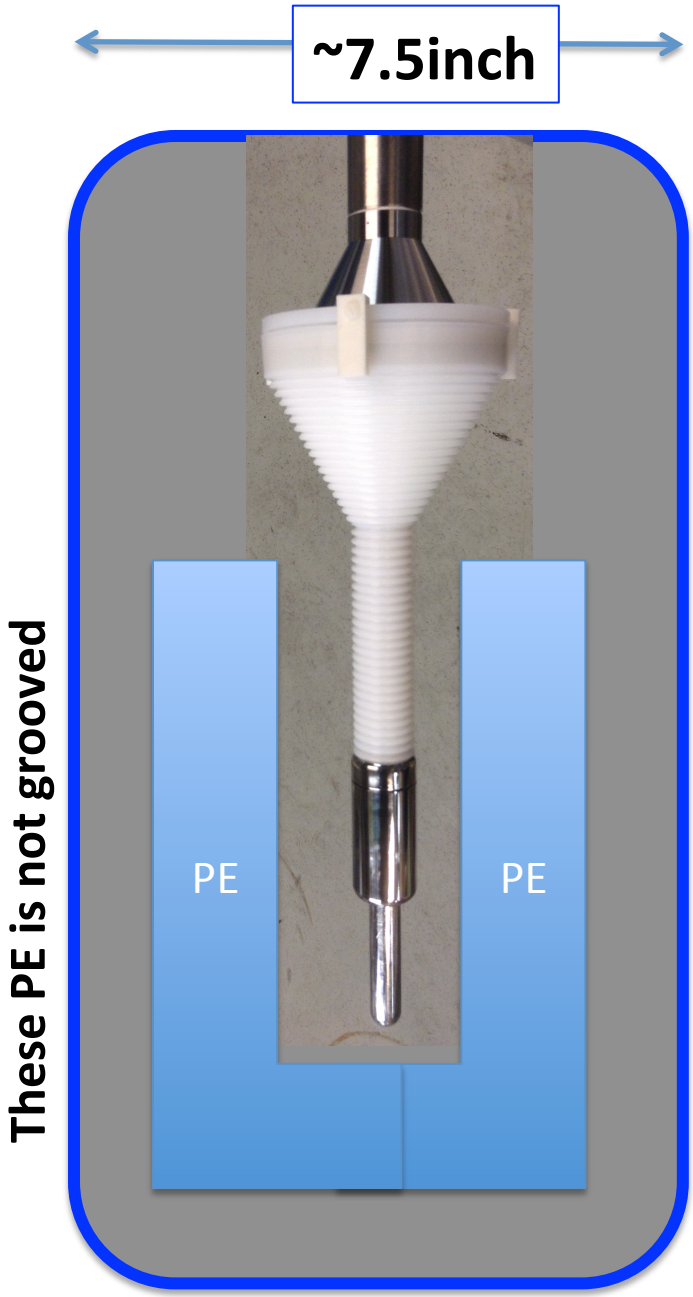

Up to 185kV

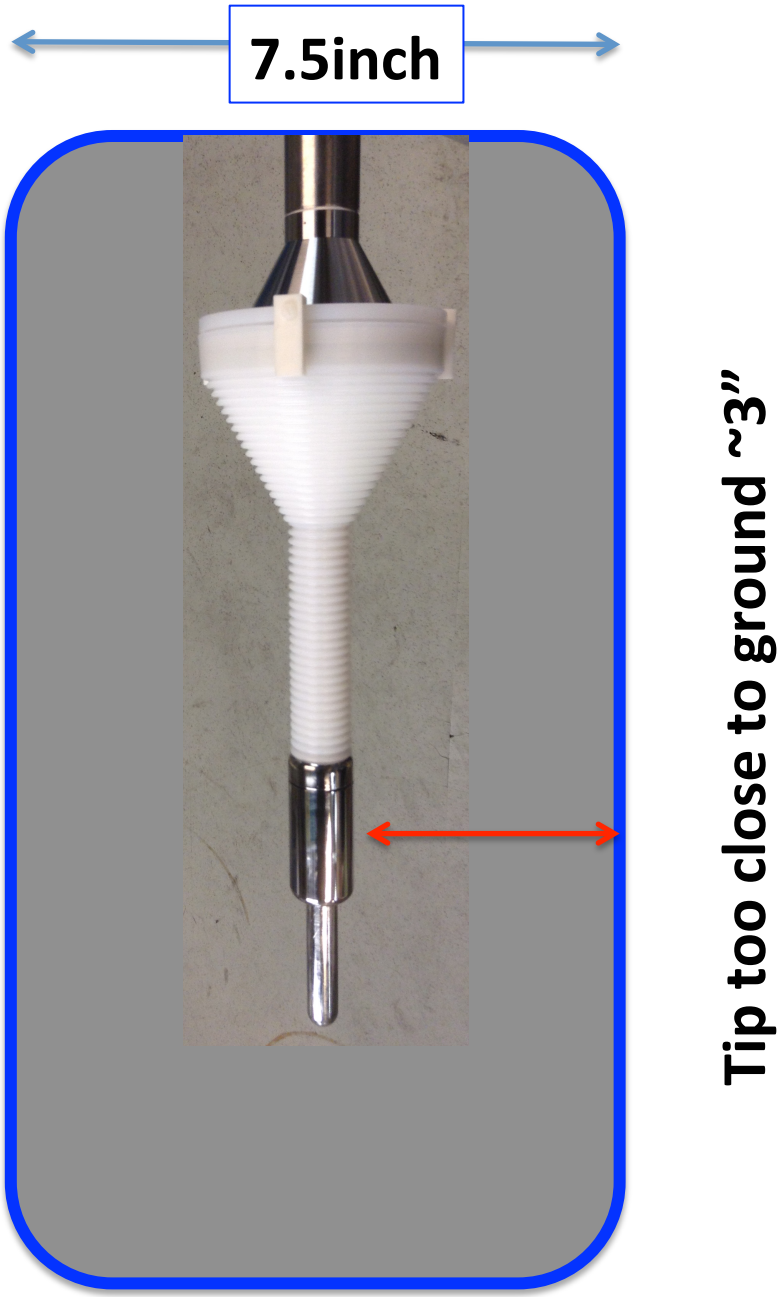

Up to 160kV

HV Ripple filter Box

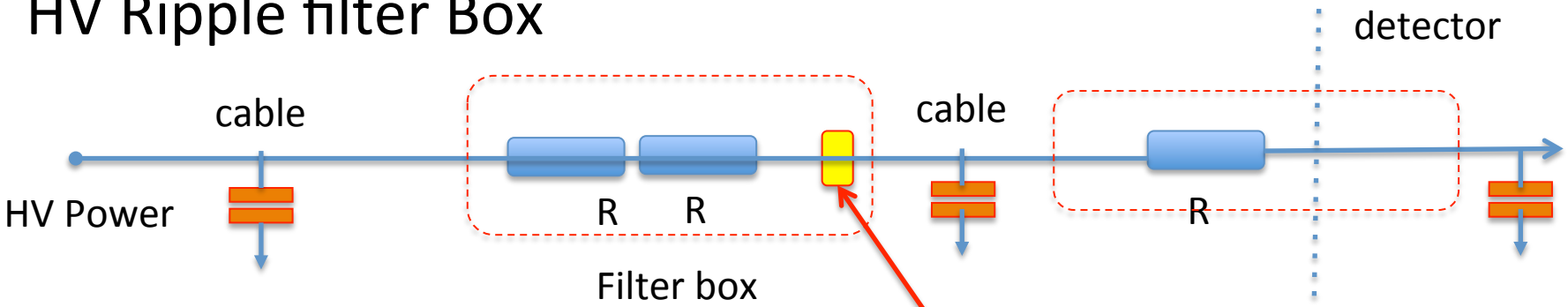

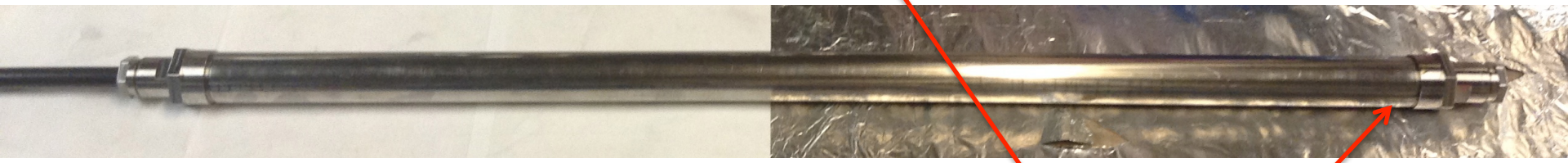

Integrated corona monitor in the filter box

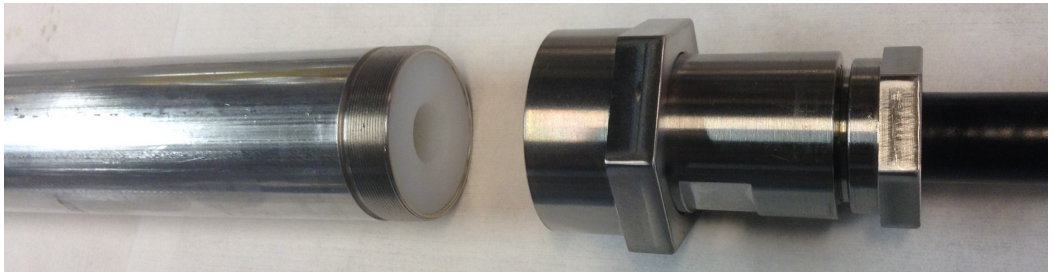

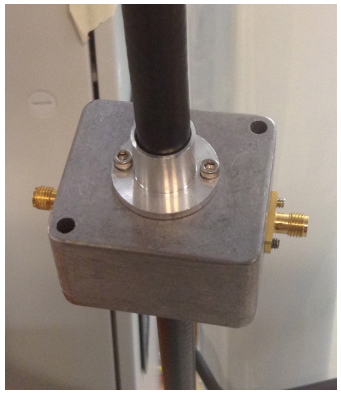

Identical to HV FT Air Side Connection

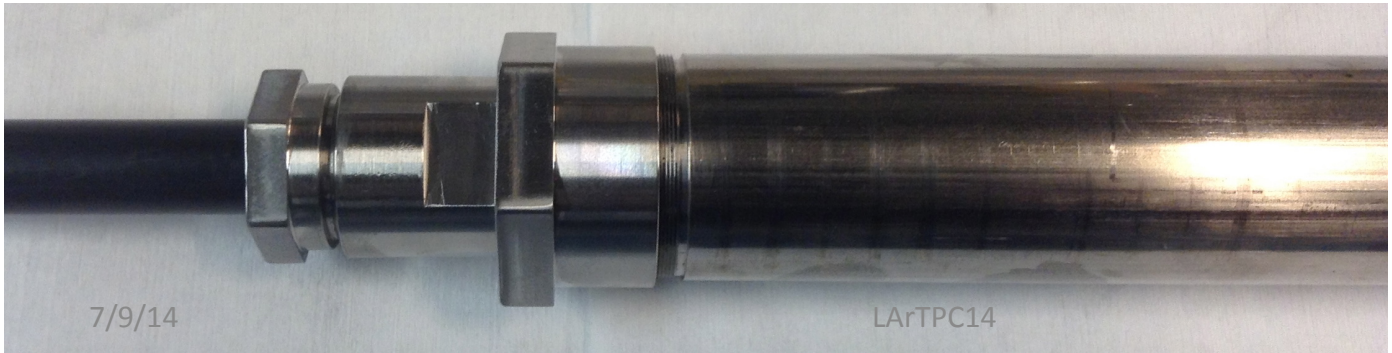

Resistor Cartridge

HV resistor (with leads cut off)
Value & HV rating to be determined by application

A possible LBNE R&D item:

Create HV Discharge onto the Cryostat wall Sample

The LBNE CPA stores 150J at full voltage. Which if discharge directly on to the cryostat wall, the energy could be high enough to destroy the membrane wall?

Challenge: how (where) to store 150J at 150kV for this test?

Future Plans

1. Upgrade the test facility with cooling system for long term test.
2. Add purification system to clean argon
3. Repeat HV Test in Clean Argon (at required purity and pressure)
4. Build longer version FT to complete the full fabrication process of LBNE HV FT
5. Discharge test on membrane cryostat wall (buy or build 30nF@100kV capacitor)
6. Any other tests under HV

Summary

- Many UHMW-PE Cryo-Fitted HV FT constructed and operated on varies experiment successfully with a wide range of voltages
- Bringing Any Voltage through a wall is possible with UHMW-PE construction.
- Success achieved mainly by:
  - **Careful field mapping-optimize geometry to minimize field strength**
  - **Groove Dielectric surface near high field region to prevent charge avalanche.**
- LBNE HV FT Design Completed.
- LBNE HV FT more Tests needed
- Open HV Tip Test not OK yet, will test in a larger Dewar
- More Studies needed to optimize Cathode and HV Connection.