Status of Partial Return Yoke Step IV & Cooling Demo

Holger Witte
Brookhaven National Laboratory
Advanced Accelerator Group

Overview

- Introduction and Concept
- Deflection Monitoring System
- Status of Manufacturing
- MICE Cooling Demo

Partial Return Yoke

- MICE hall: solenoids cause large stray field
- Aim of PRY:
  Reduce stray field in hall to tolerable level
- Shielding plates
  - wall thickness 10 cm
  - weight: 55t
- Performance
  - Reduces stray field outside of shield to 5-10 Gauss

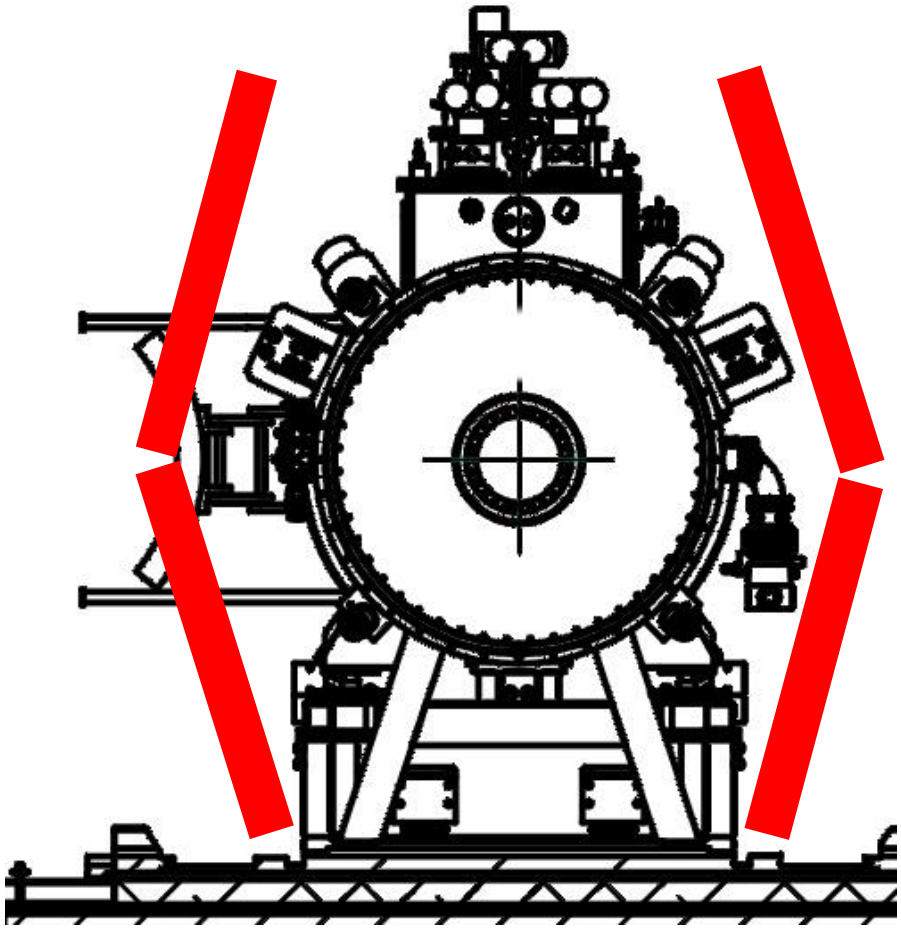

H Witte. Step IV & VI: Local Flux Return. MICE CM 34, October 2012.

(Note: not to scale)

Principle

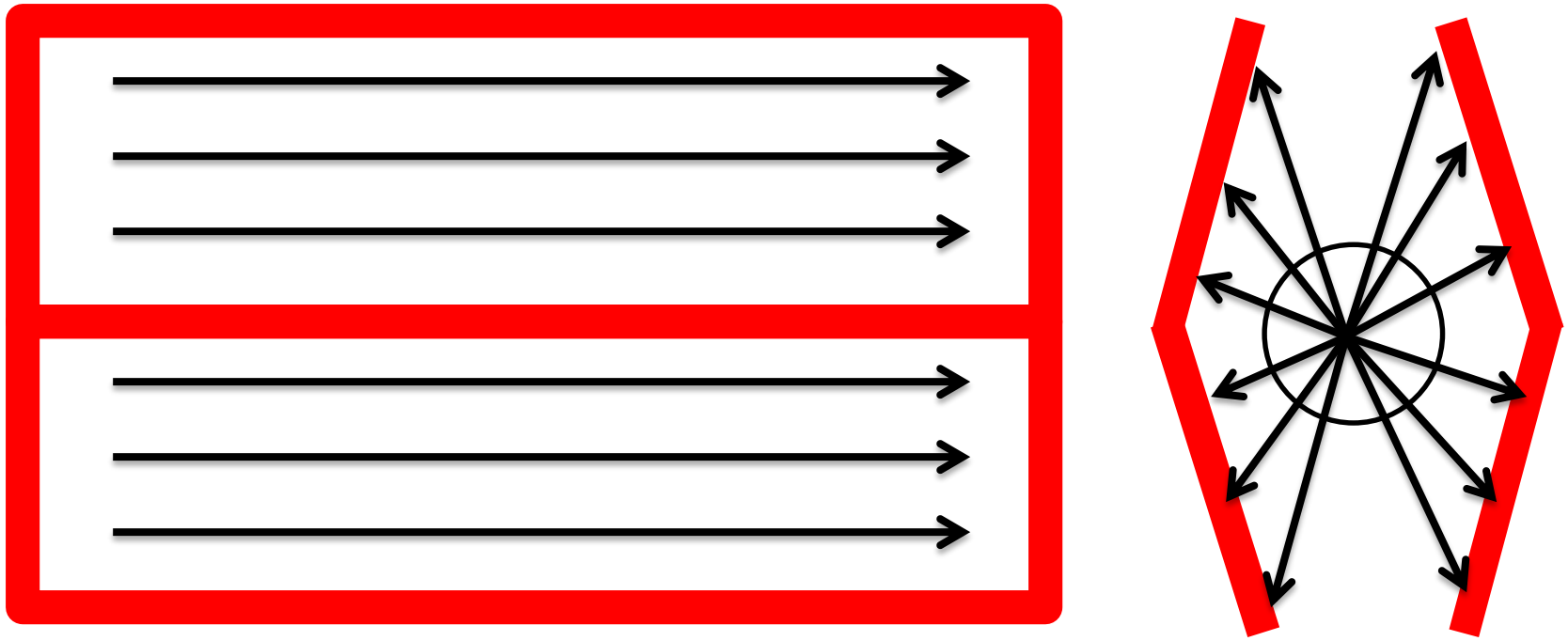

PRY Step IV

Simplified end-plates

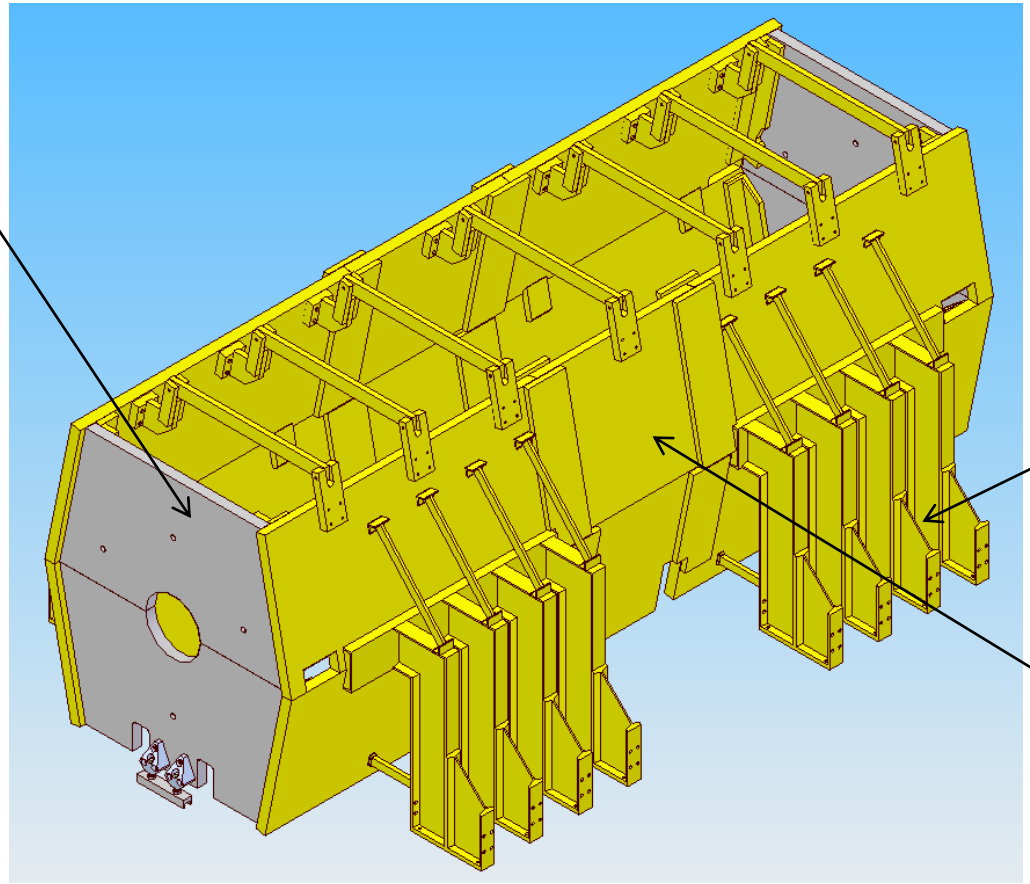

Reduced number of more compact legs now with symmetry S-N

6 Piece Design with central access to AFC for absorber changes

Courtesy of J. Tarrant / S. Plate

Forces

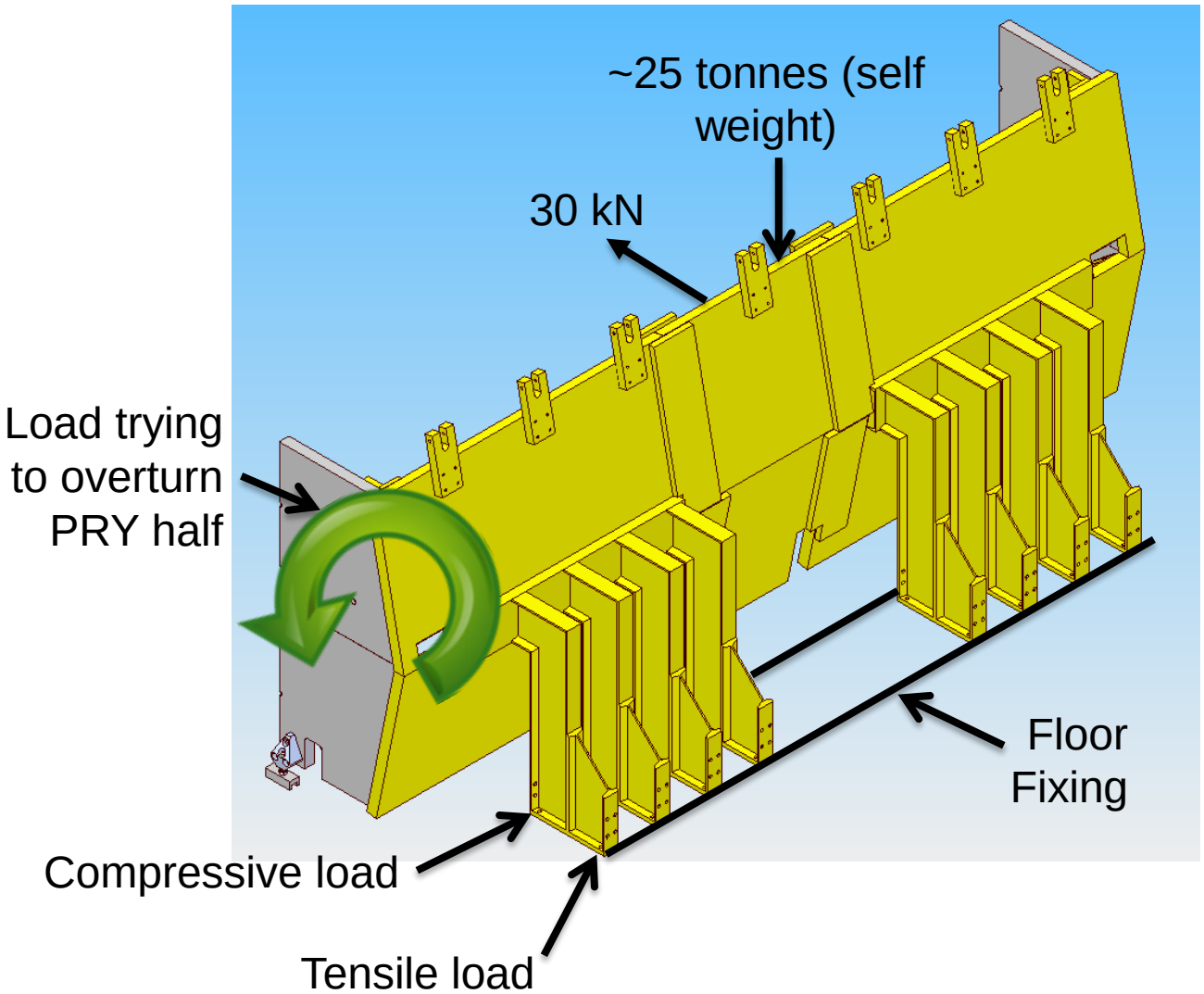

NO CAPACITY FOR SIGNIFICANT MAGNETIC LOAD IN FLOOR FIXING: Cross-bars, leg ties & link plates will take magnetic loads

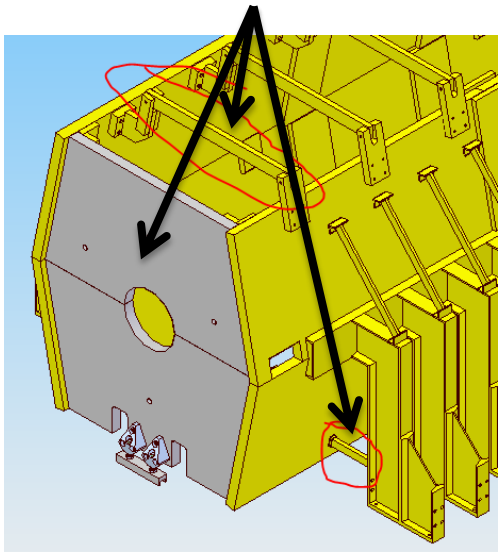

Force Scenarios

- Nominal cases
  - 200/240 MeV flip/solenoid mode
  - Deflection 0.18 mm
- Worst case analysis
  - Increased forces by factor 5
  - **Still very safe**

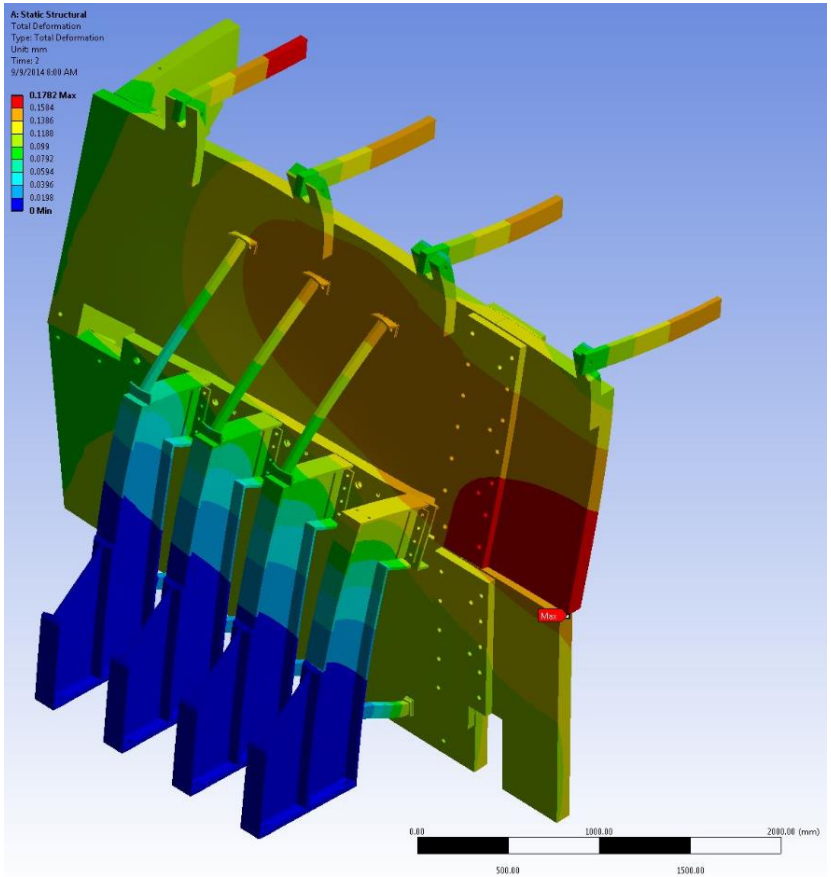

Force Scenarios

- Nominal cases
  - 200/240 MeV flip/solenoid mode
  - Deflection 0.18 mm
- Worst case analysis
  - Increased forces by factor 5
  - **Still very safe**
- Monitoring: draw-wire sensor

WDS-3000-P115-CA-P

Force Scenarios

- Nominal cases
  - 200/240 MeV flip/solenoid mode
  - Deflection 0.18 mm
- Worst case analysis
  - Increased forces by factor 5
  - **Still very safe**
- Monitoring: draw-wire sensor

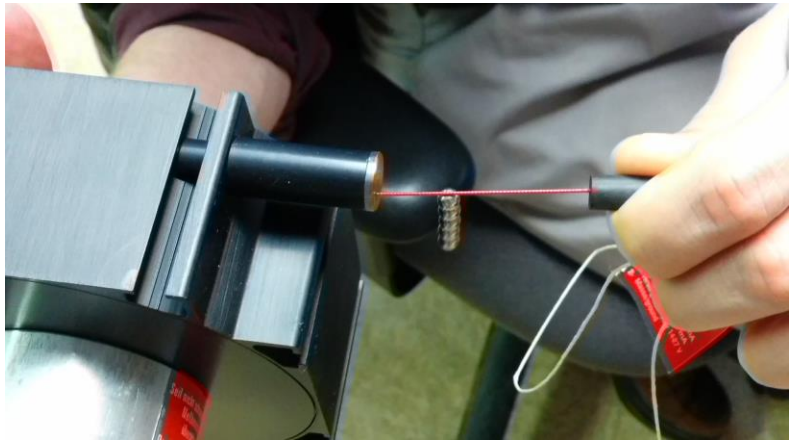

Integration

DAQ: Pierrick M. Hanlet

Courtesy of J. Tarrant, STFC

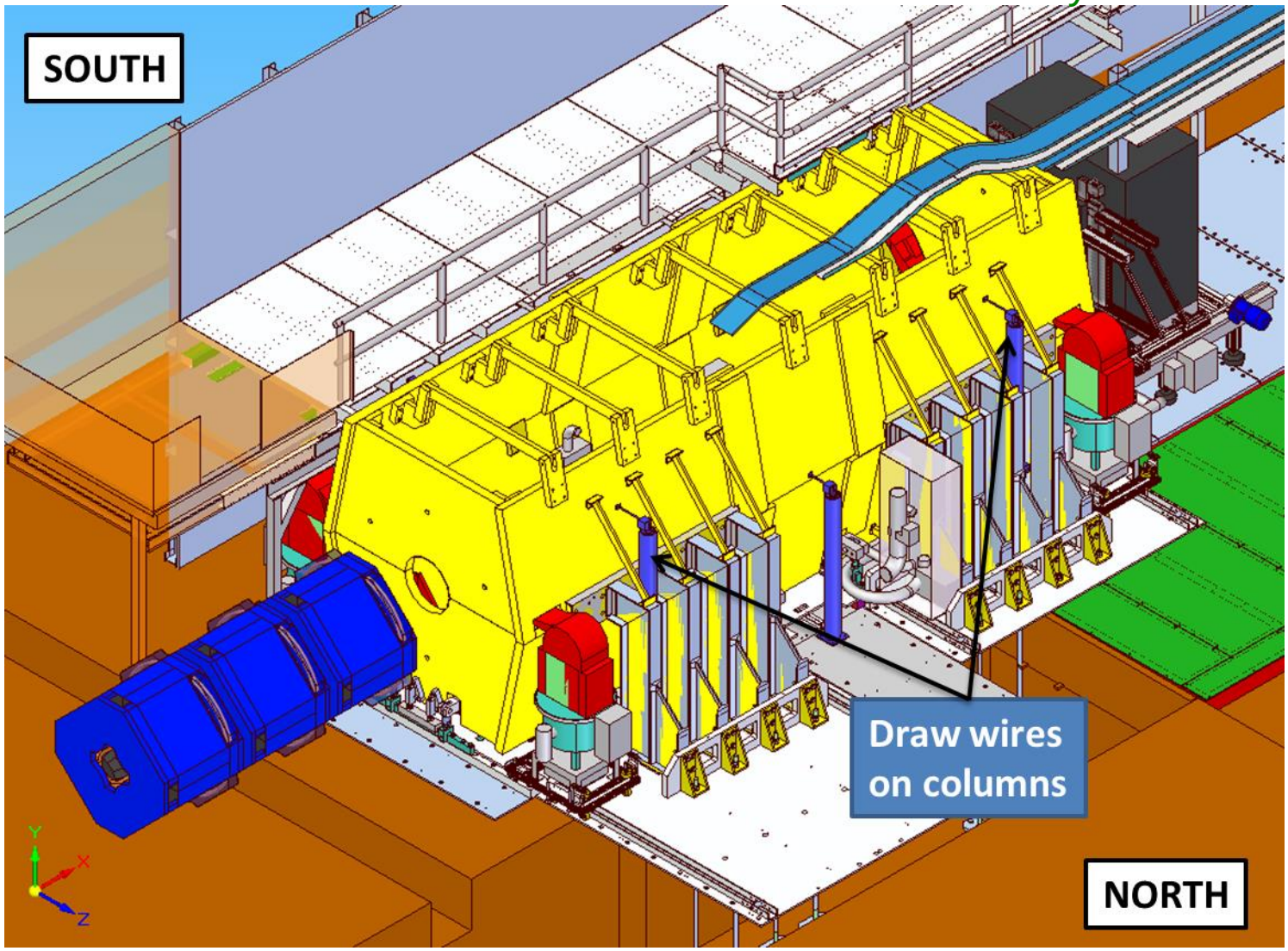

Status of Manufacturing

Support Structure

Support Structure

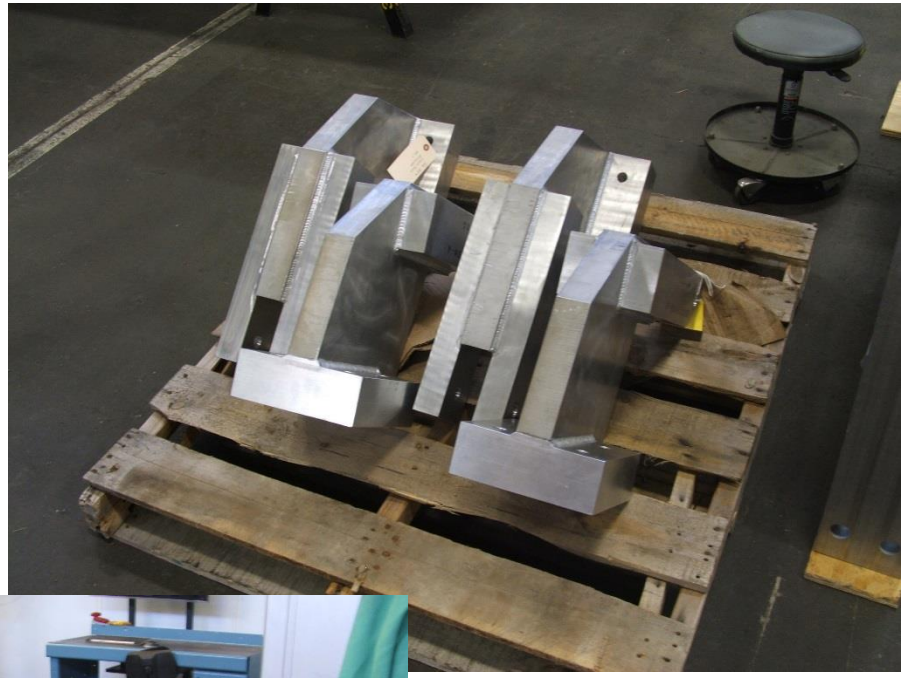

Steel?

2” plate

20 miles from Tonawanda (Buffalo, NY)
October 21st

4” plate

Typhoon Vongfong October 2014

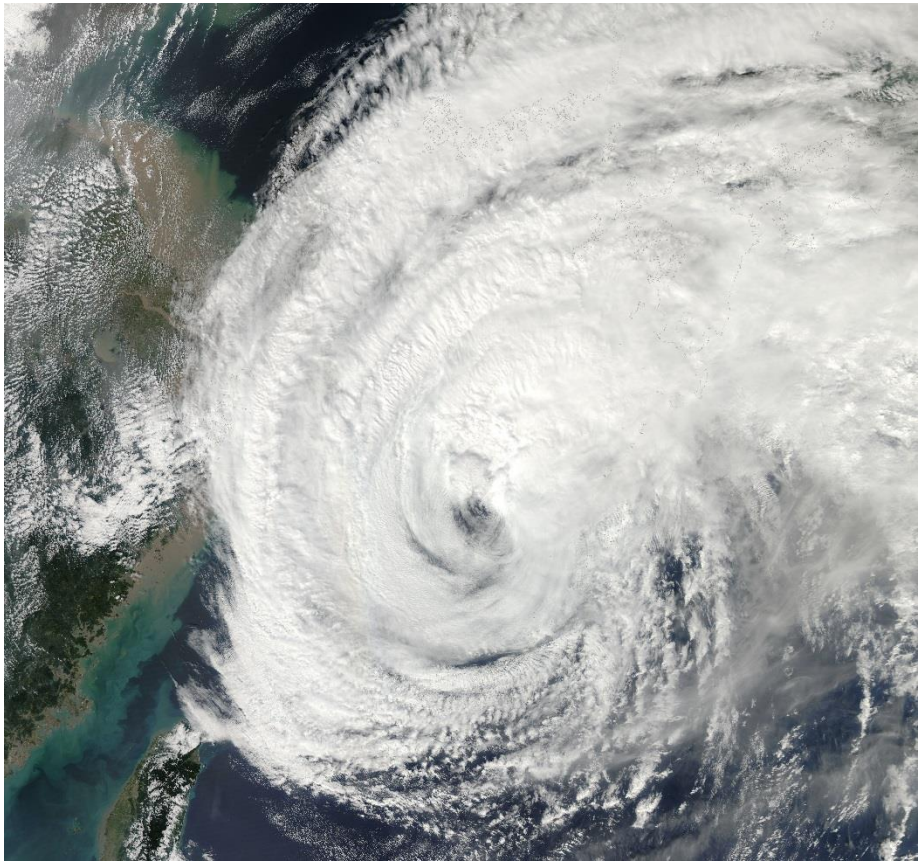

Steel?

2” plate

20 miles from Tonawanda (Buffalo, NY)
October 21st

4” plate

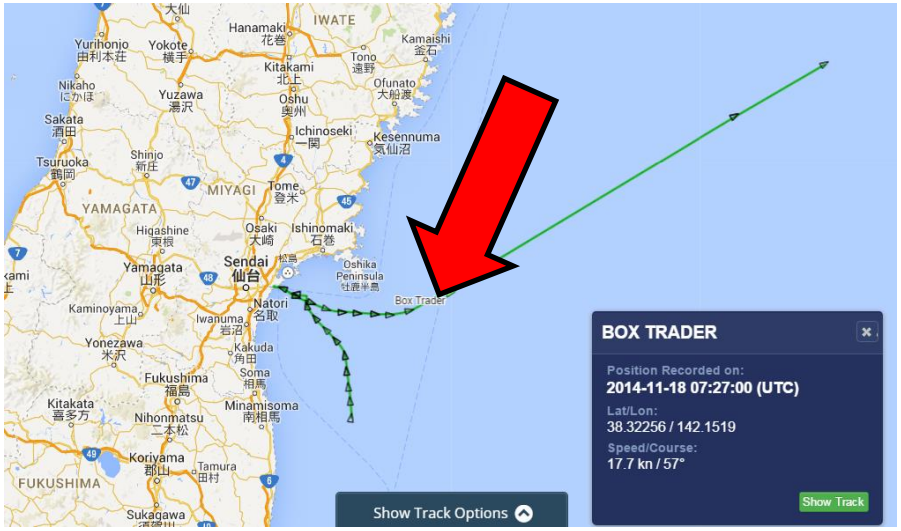

11/18/14
8500 km to go to LA (11 days)

Steel?

2” plate

20 miles from Tonawanda (Buffalo, NY)
October 21st

4” plate

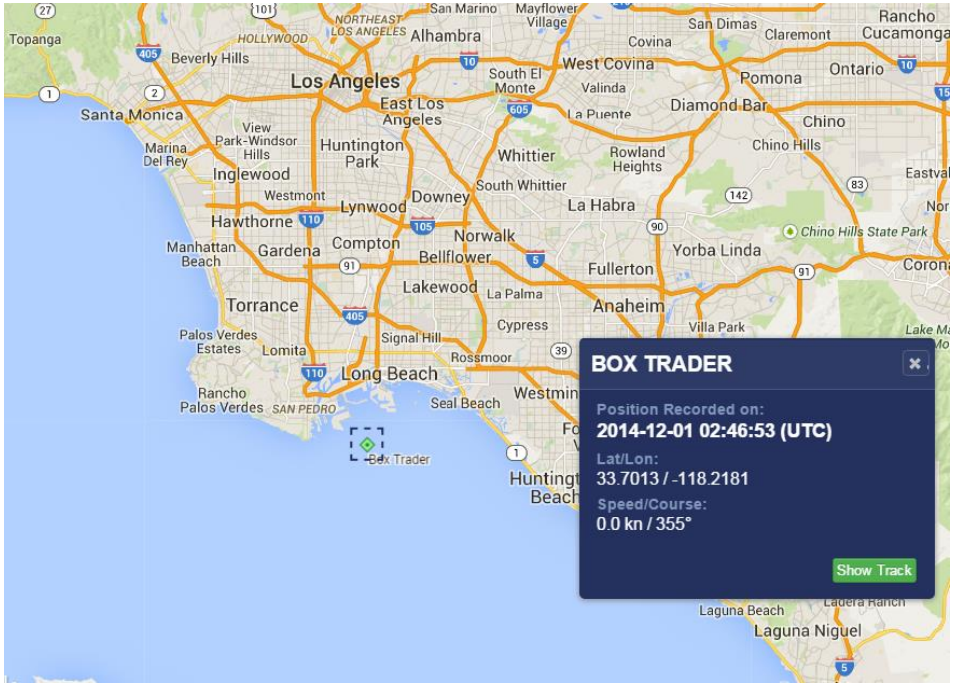

2” Plate

Steel arrived at manufacturer on 11/21/14

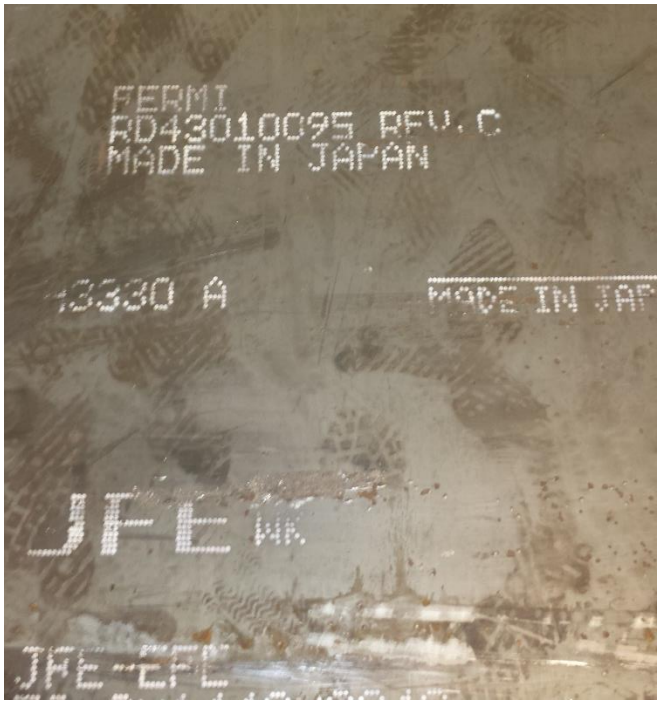

JFE Measured BH Curves

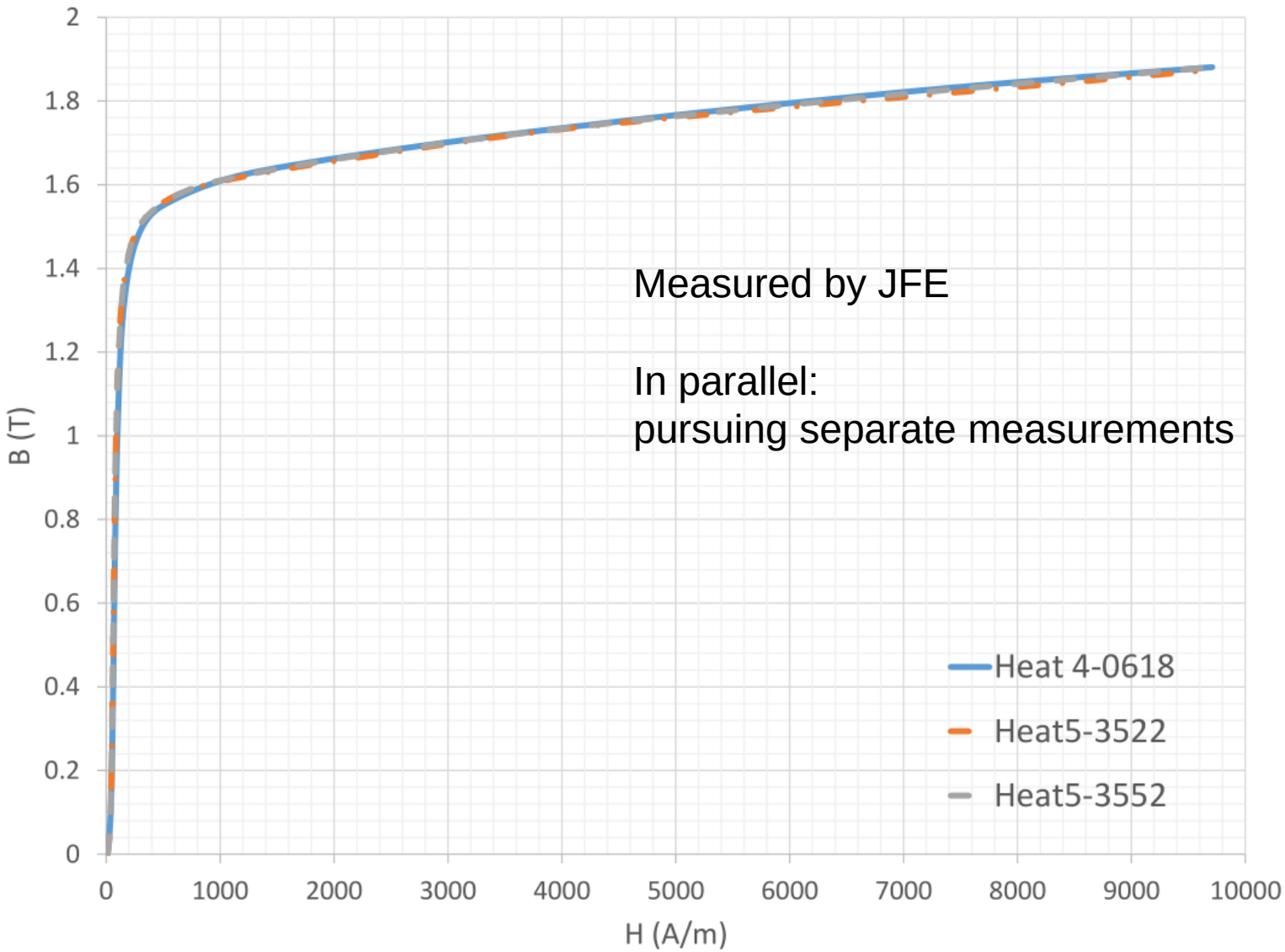

Comparison with JFE-EFE (targeted values)

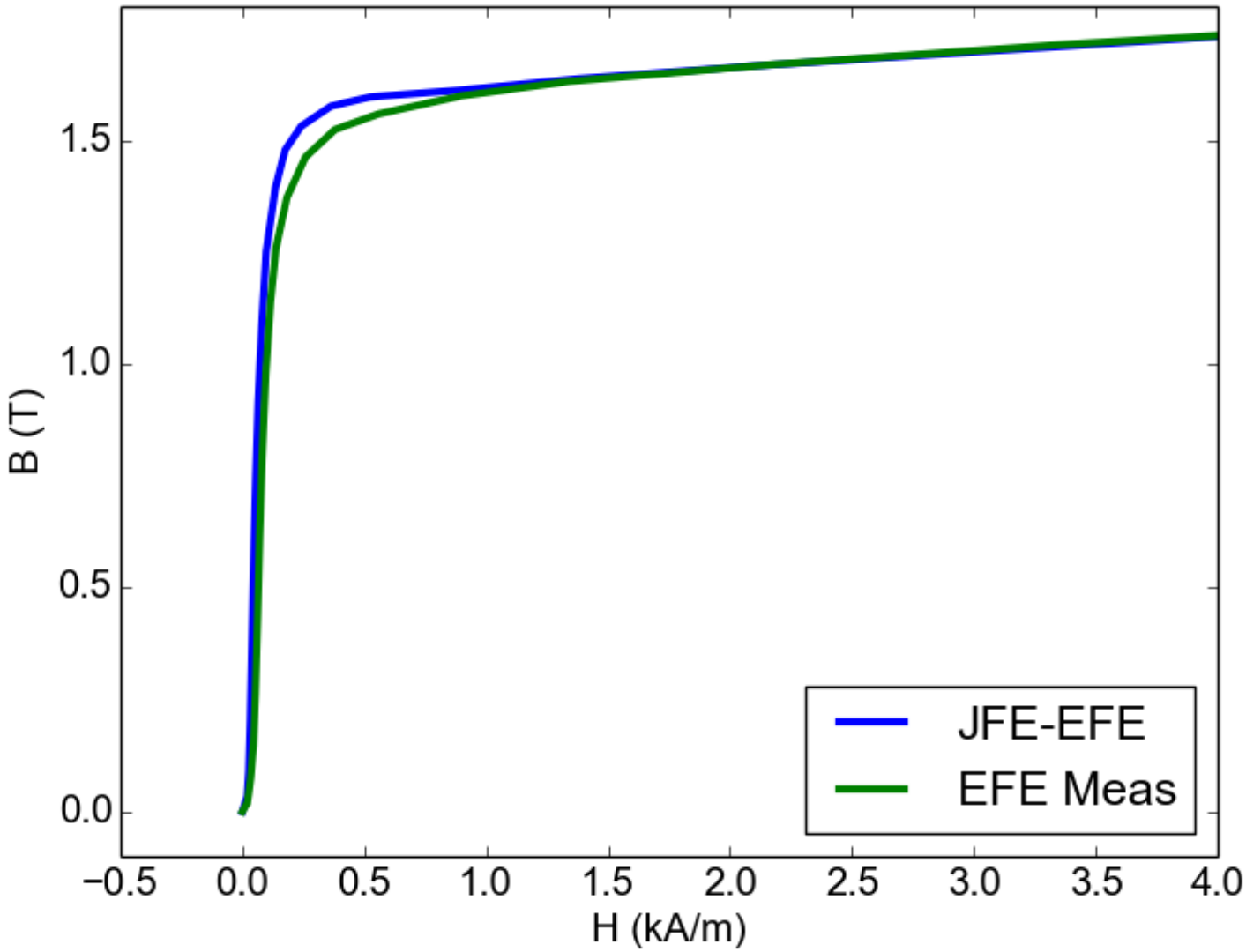

Comparison with JFE-EFE (targeted values)

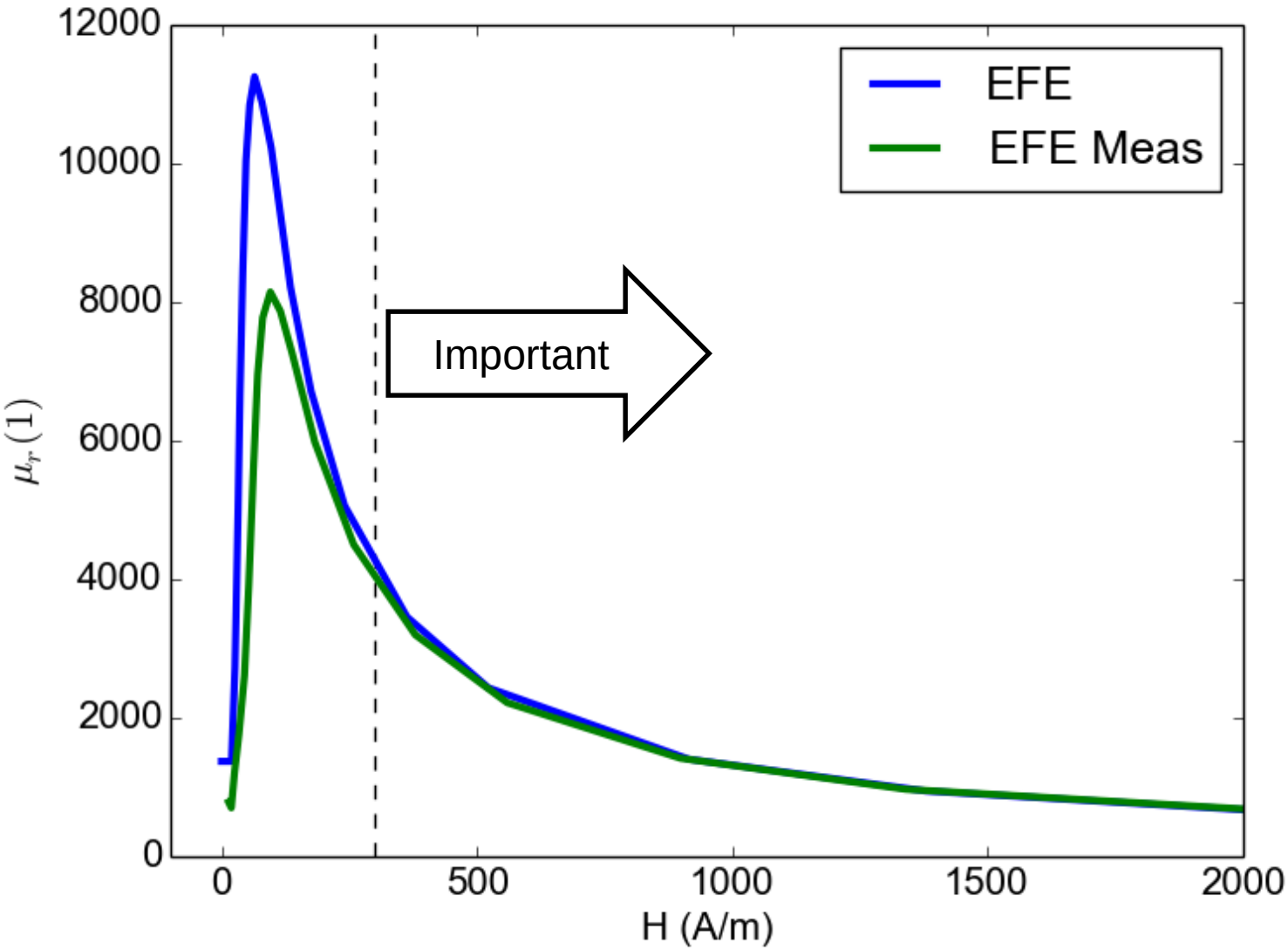

Field at R1.5m (Beam Height)

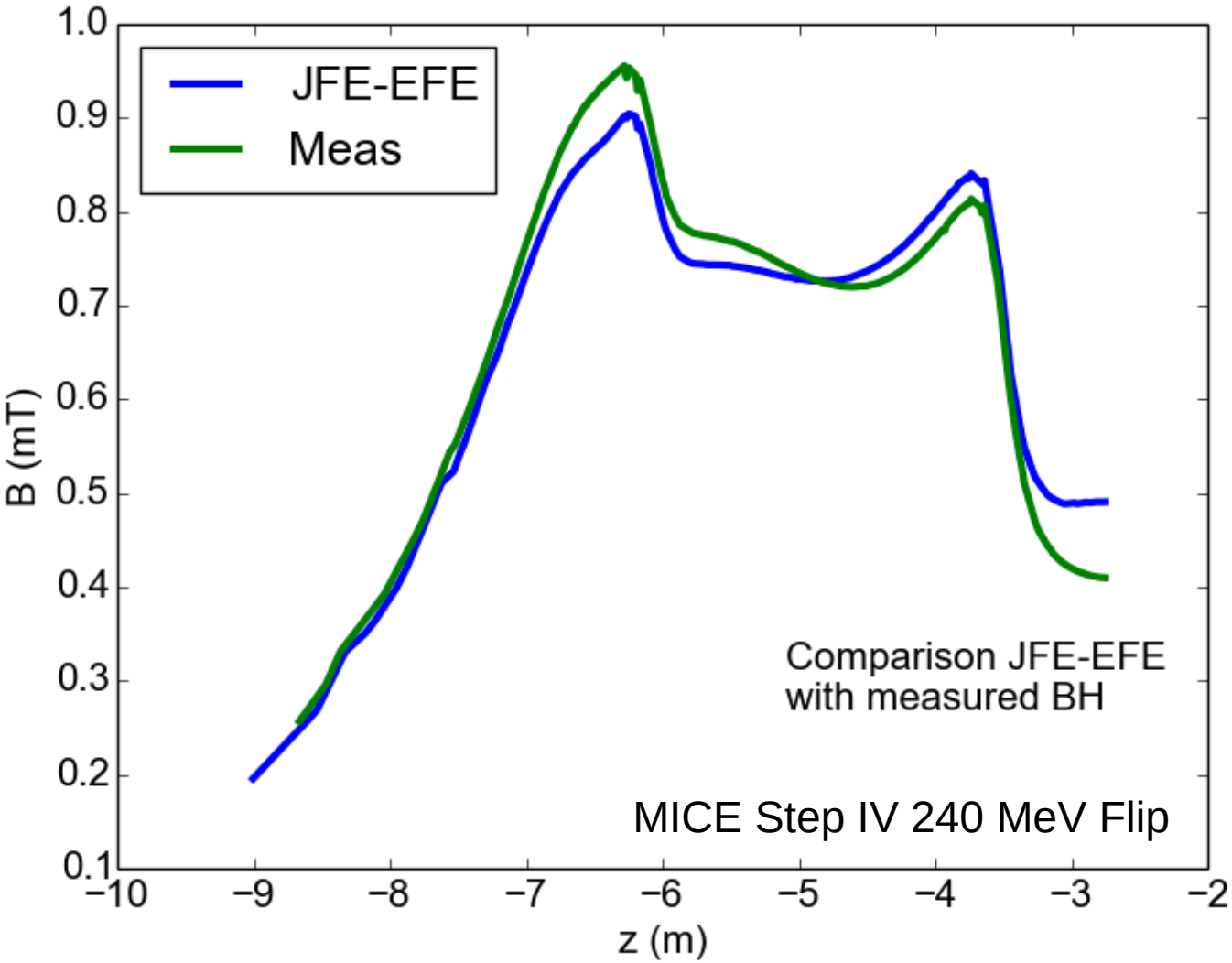

Schedule

- Dec 2014: steel procurement complete
- Jan 2015: south framework shipped to RAL
- Feb 2015: south shielding wall complete
- March 2015:
  - North shielding wall complete
  - South wall shipped to RAL
- April: North wall / framework shipped to RAL
- May: MICE IV Magnetic Shielding - Complete

MICE Cooling Demo

MICE Step 3Pi/2 (Cooling Demo)

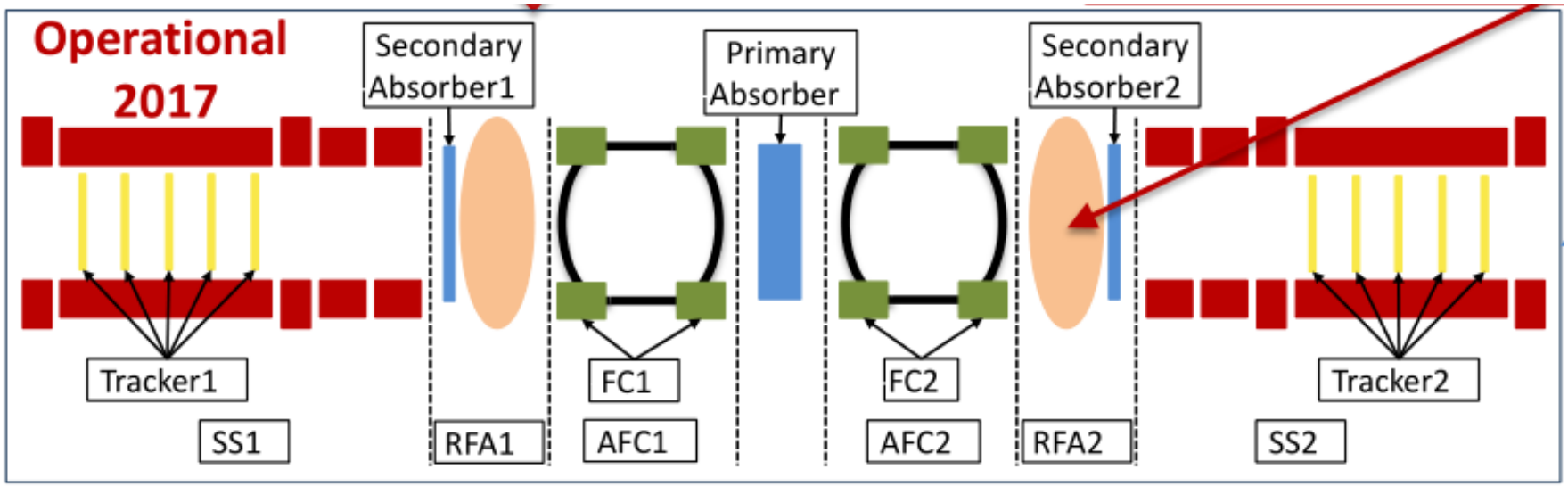

- Two versions
  - Reference design (J. Pasternak, V. Blackmore, …)
  - Alternative design (Chris Rogers)
- Described in MICE Note 450

Reference Lattice

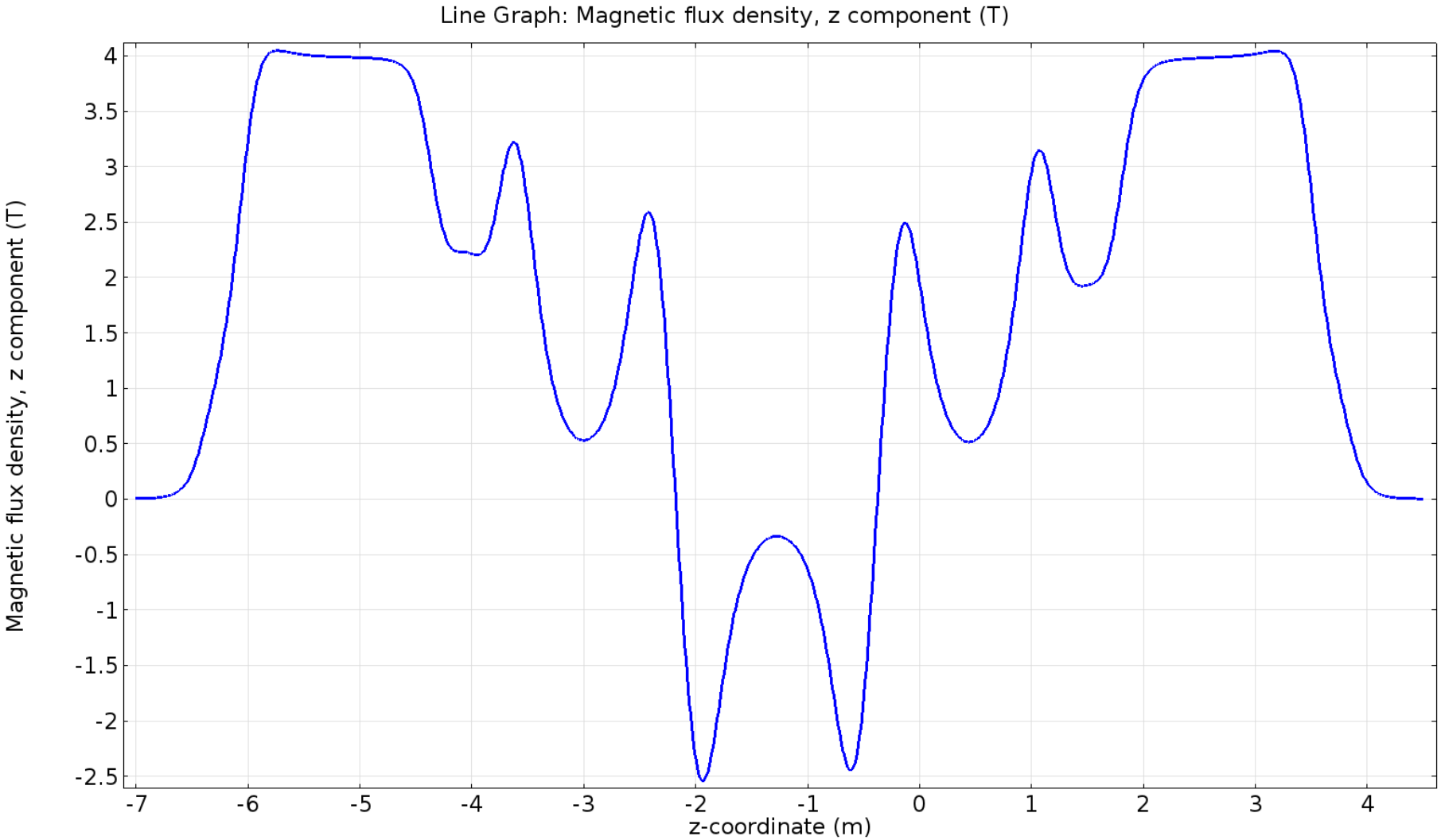

Alternative Lattice

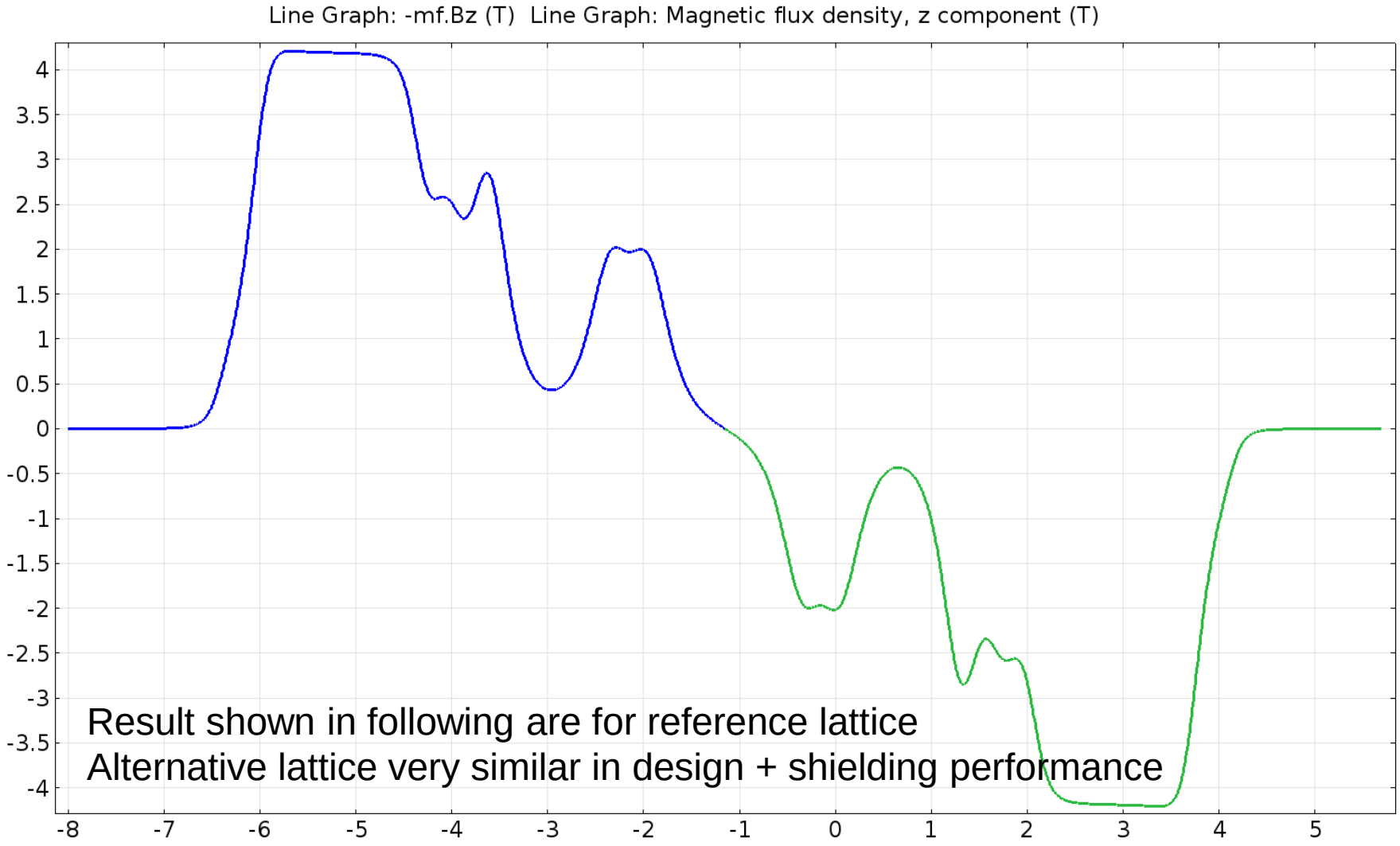

Result shown in following are for reference lattice
Alternative lattice very similar in design + shielding performance

PRY Geometry

In general: Recycle PRY Step IV

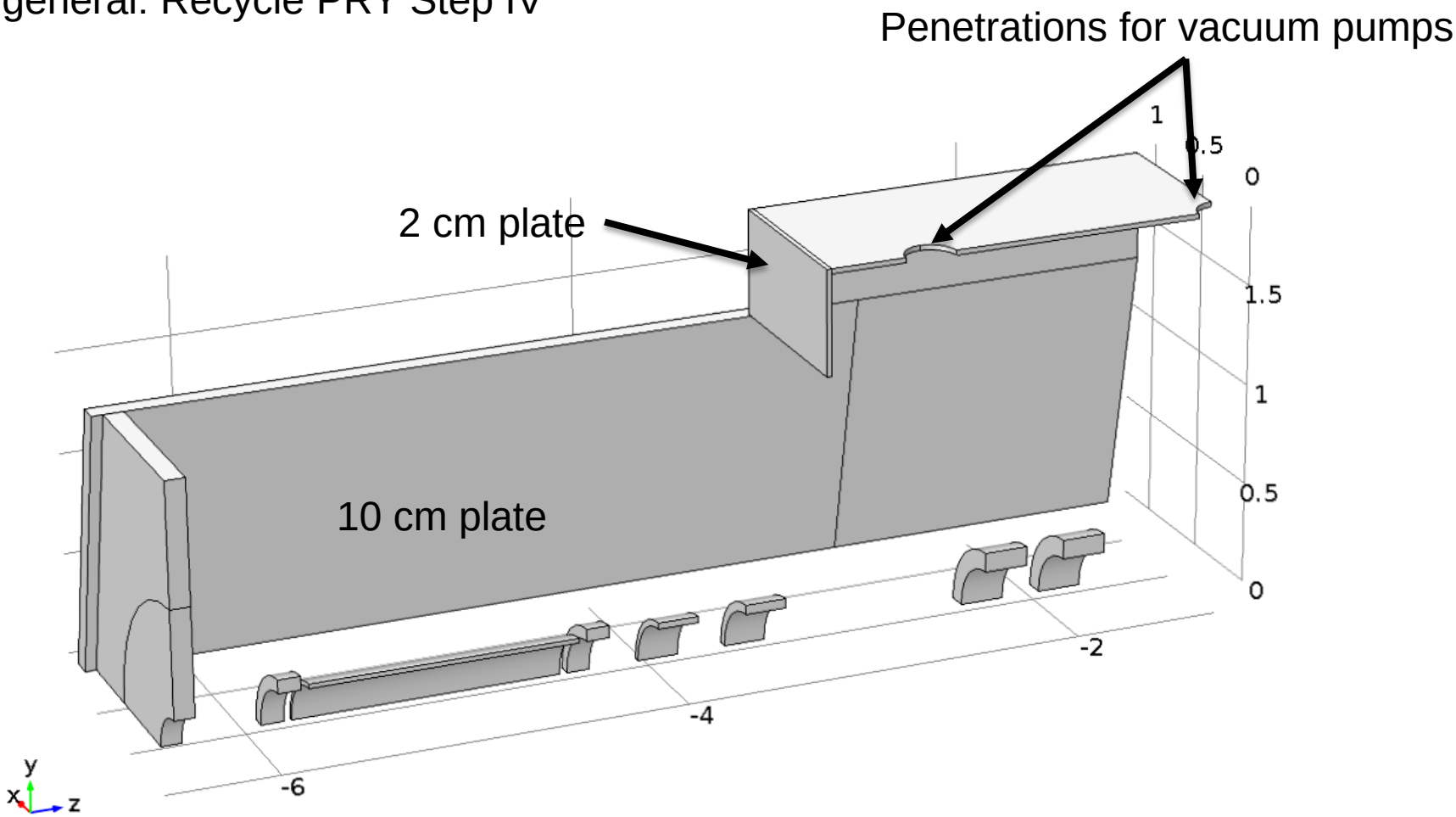

Additional iron: 14 tons 10 cm plate
2 tons 2 cm plate (doghouse)

Ref Lattice - 5/10 Gauss Doghouse

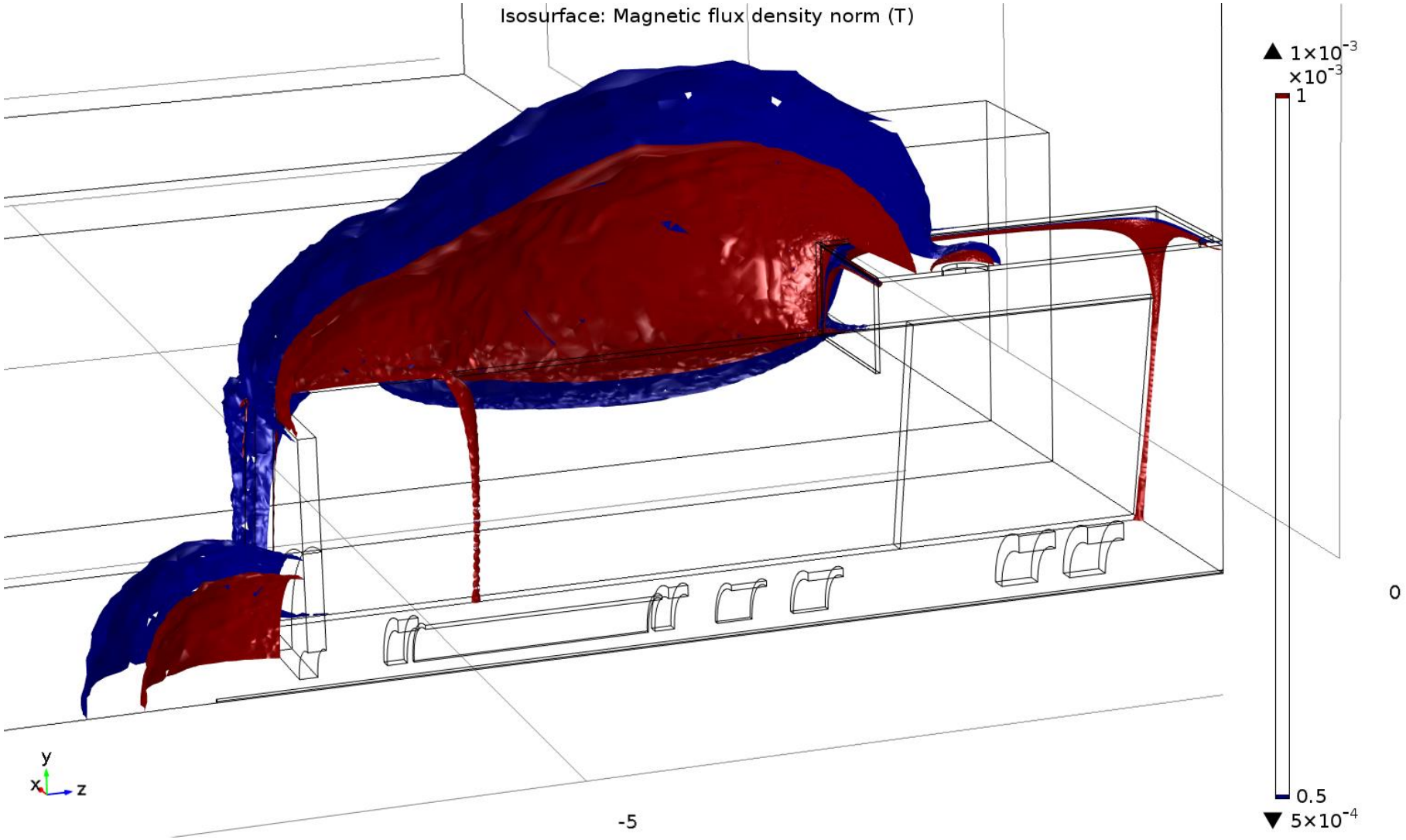

Ref Lattice - 5/10 Gauss No Doghouse

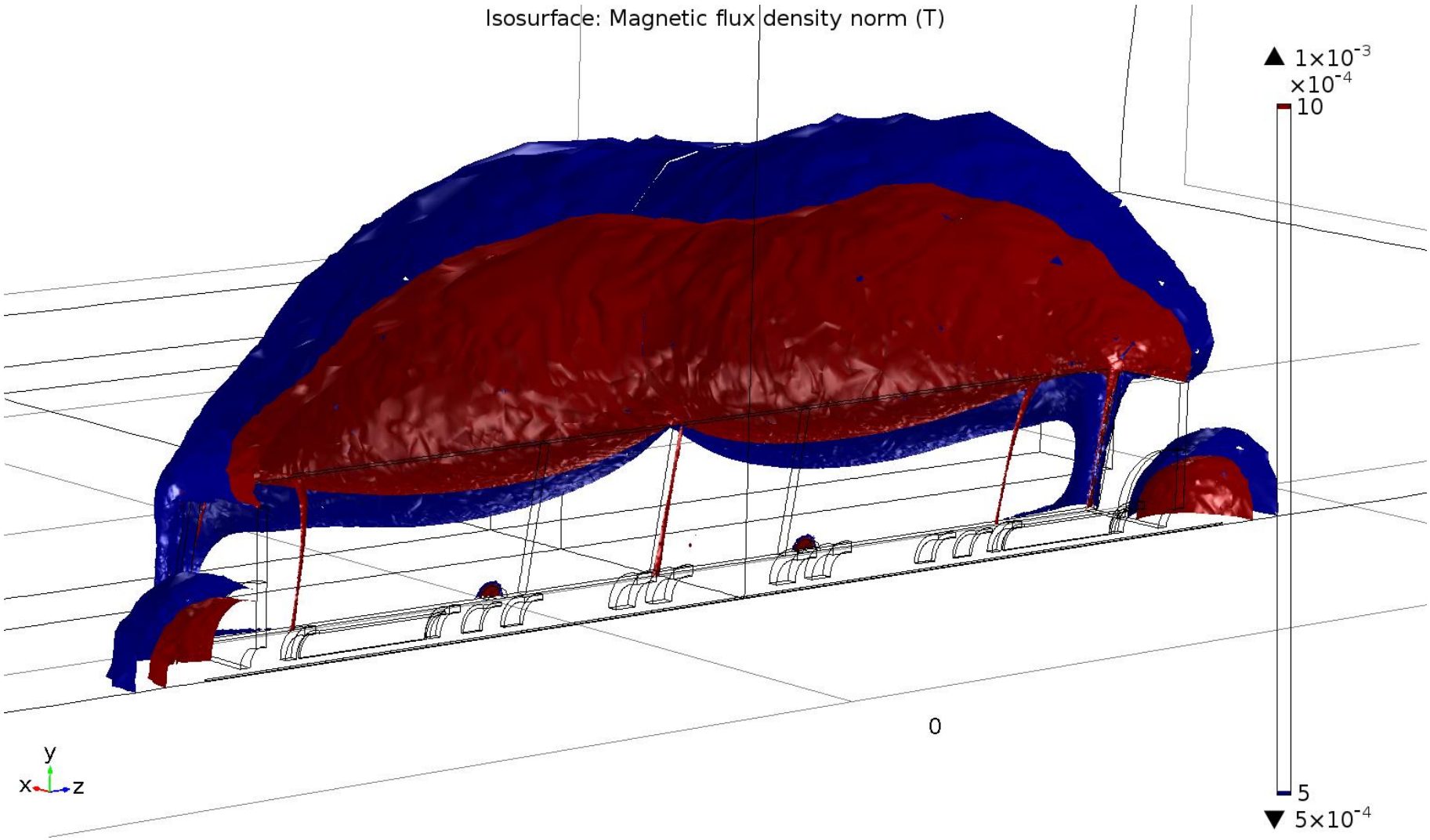

Magnetization

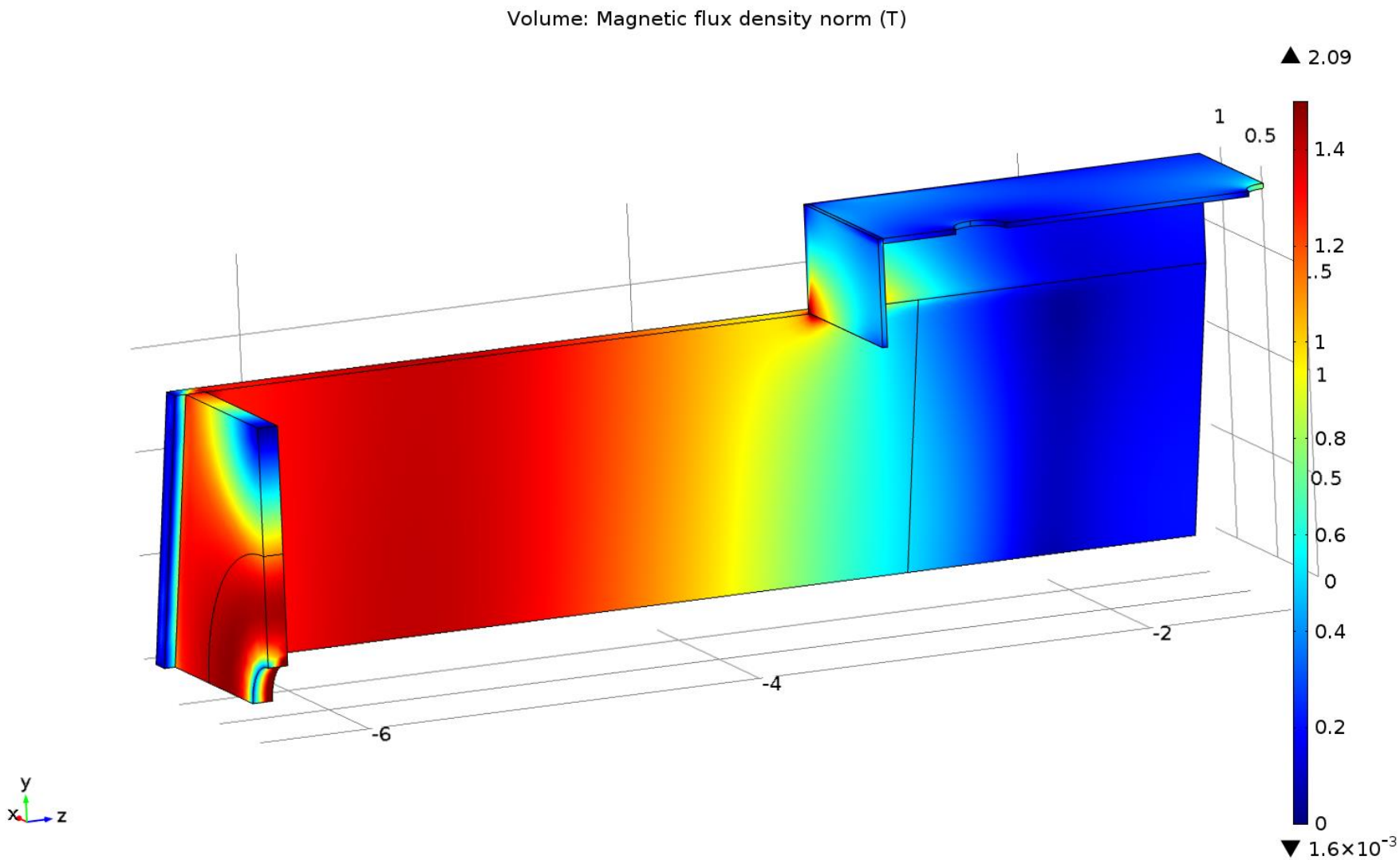

Ref Lattice - Doghouse

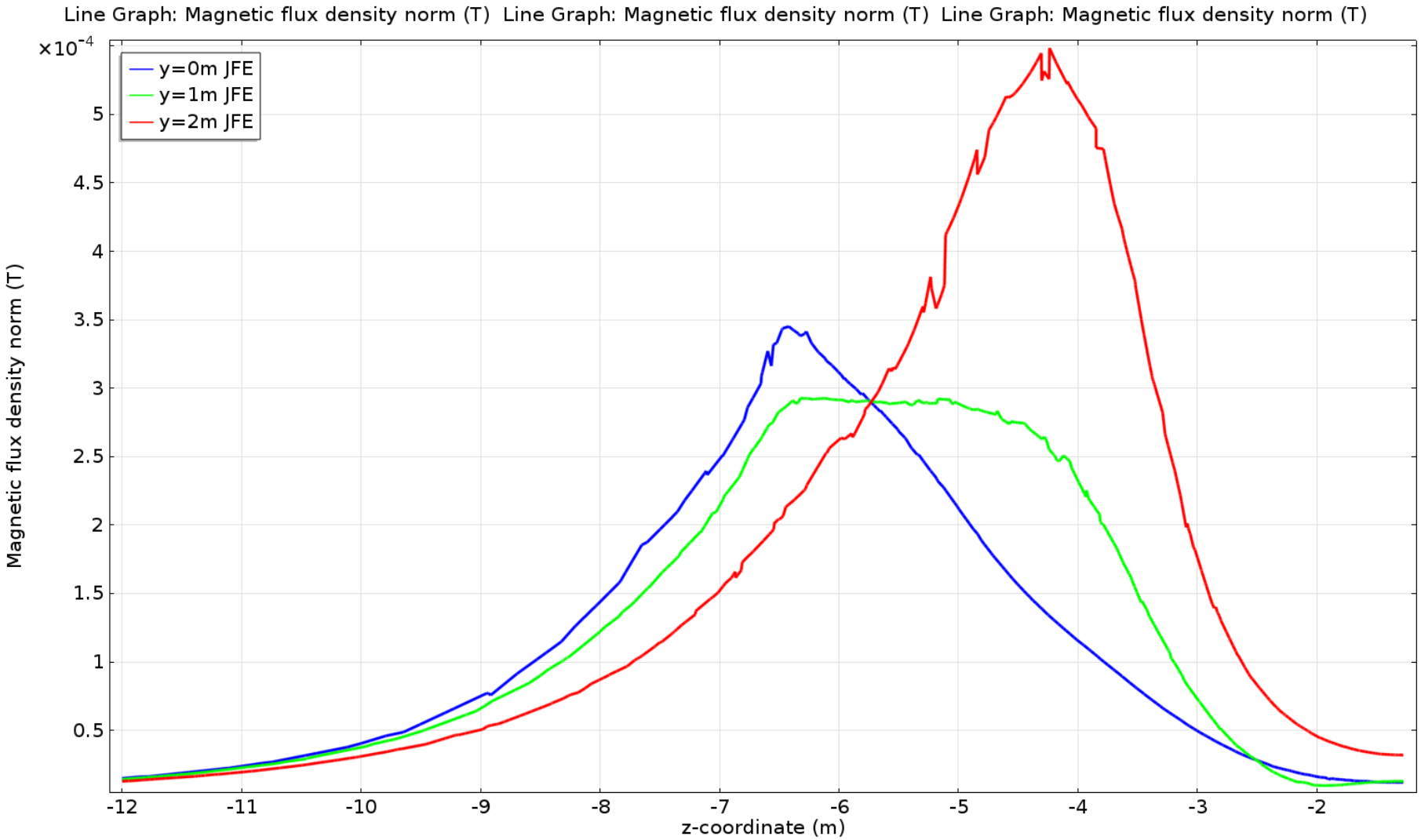

Forces PRY

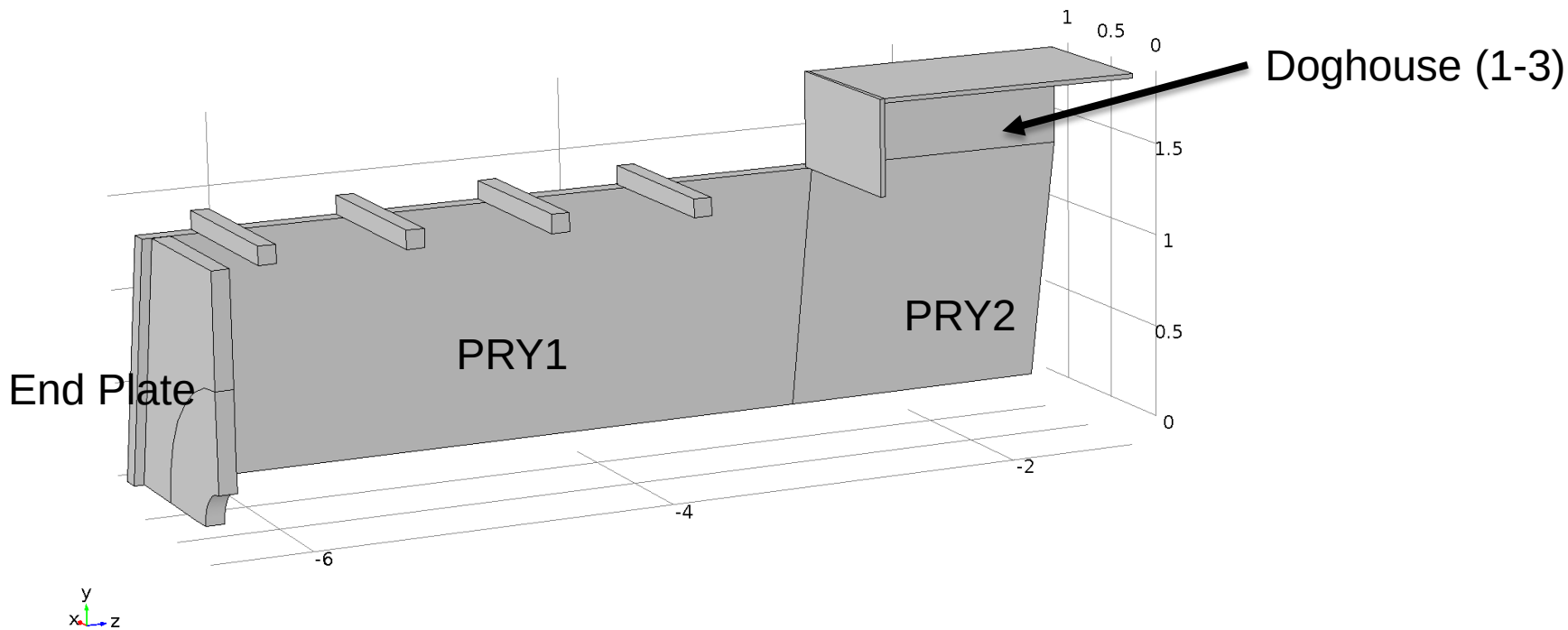

	F_x	F_y	F_z
PRY 1	-1800	-340	7
PRY 2	-2000	-400	0
PRY End Plate	-5350	-5366	32000
Dog House (1-3)	<14	<170	<20

Force Evaluation MICE Solenoids

- Forces on coils were evaluated in 2D simulation
  - No iron
- Compare spectrometer for Step 3Pi/2 with forces during commissioning

	E2	SS	E1	M2	M1
Step 4.5 Ref /Spectrometer Test	1.03	1.22	1.21	0.29	0.73
Step 4.5 Alt /Spectrometer Test	1.09	0.87	1.25	1.09	0.78

(Focusing coils uncritical due to the lower current density)

E1 Comparison Margin

Step 3PI/2 - Reference

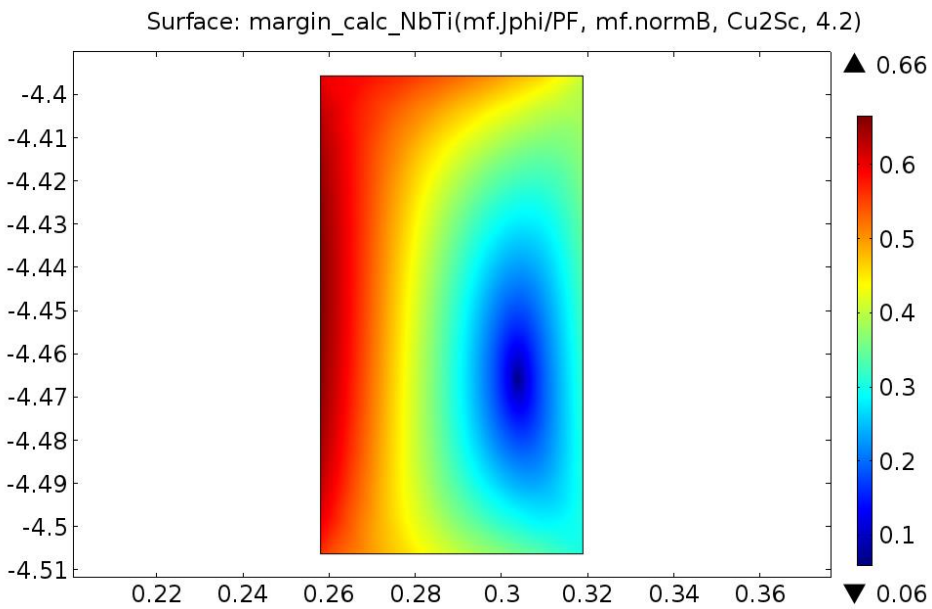

Spectrometer Test

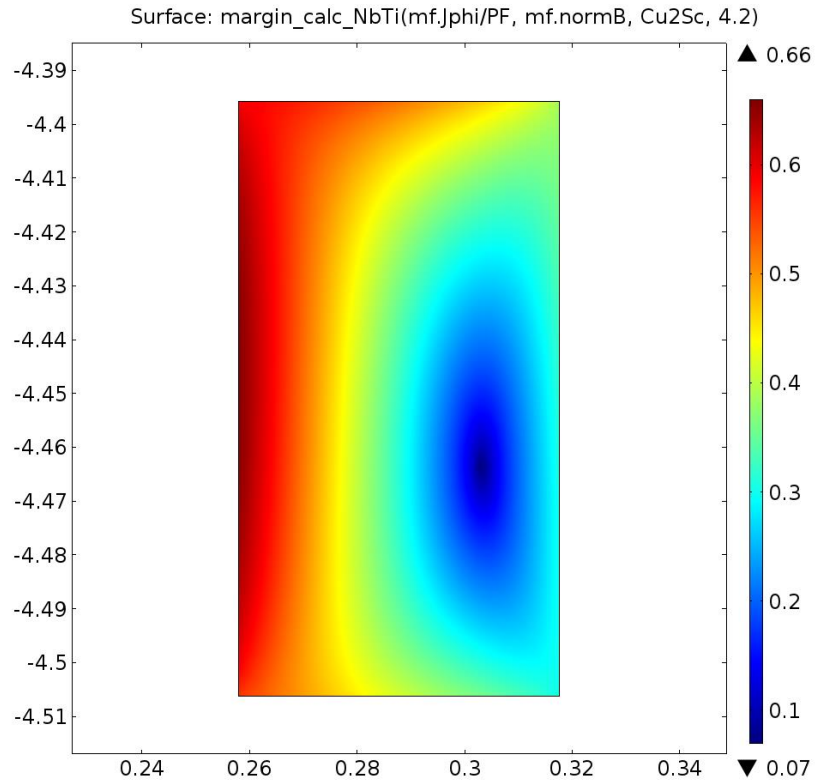

Cu:SC ratio: 3.9
Packing Factor 80%

Von-Mises Stress

Spectrometer Test

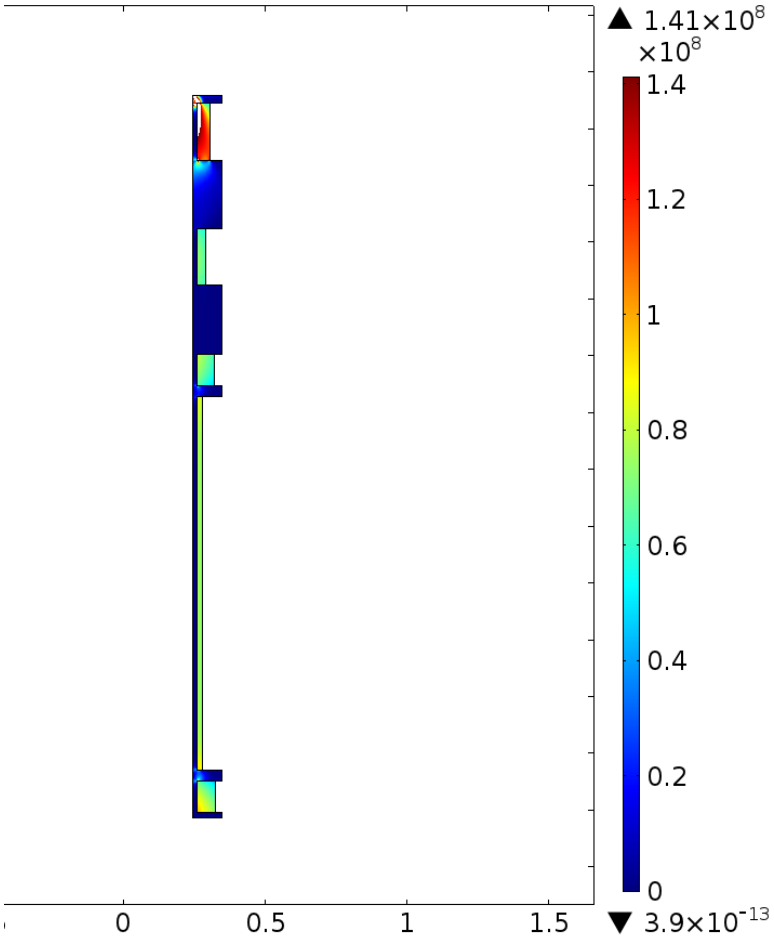

Step 3PI/2 - Reference

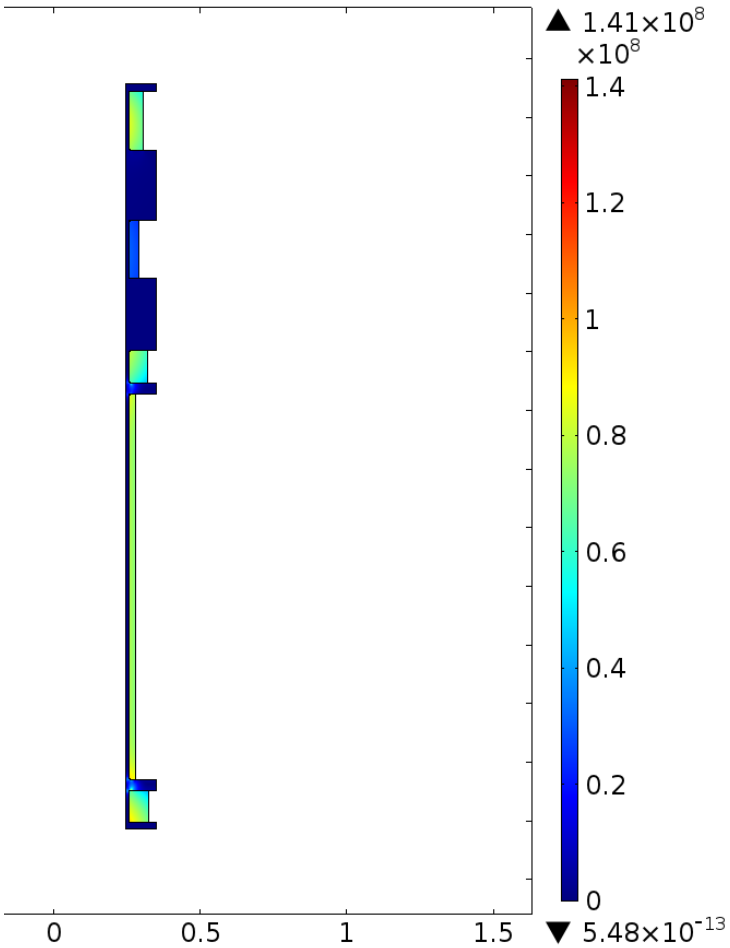

E1, SS, E2: unchanged

M1, M2: von-Mises stress lower for Step Pi

Engineering

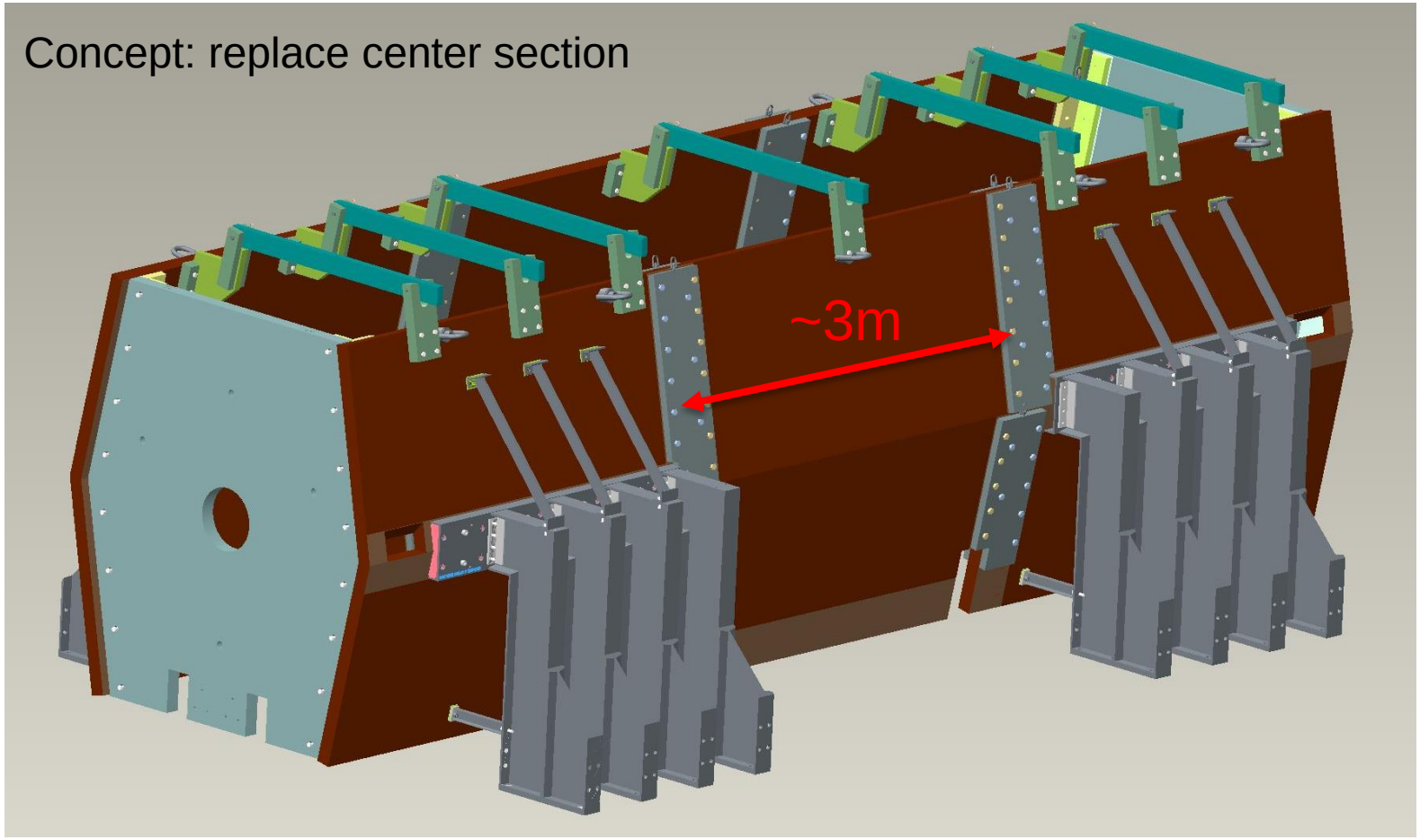

ANSYS model under preparation (we may need additional support legs)

Summary

- Manufacturing PRY Step IV
  - Framework completed
  - 2” steel plate at manufacturer
  - 4” steel plate: on US ground
  - Expedited machining: multiple vendors in parallel
  - Potentially air shipping of PRY
- PRY Cooling Demo
  - Conceptual design
  - Performance looks ok
  - Engineering started