Fermilab

Managed by Fermi Research Alliance, LLC for the U.S. Department of Energy Office of Science

Far Site Configuration

Joe Lykken

DUNE collaboration phone call

20 March 2015

EFIG = Experiment Facility Interface Group for LBNF

- As recommended in the draft governance plan, this group is the regular interface between the LBNF facility project and the DUNE experimental collaboration
- Has been meeting for about a month already for high-level critical path design choices, in consultation with engineering teams from Fermilab, CERN, and SDSTA
- Chair is Joe Lykken (representing Nigel Lockyer), Mike Lindgren (FNAL Chief Project Officer) and Pepin Carolan (DOE) ex officio
- DUNE spokespeople André Rubbia and Mark Thomson
- Jim Strait and Elaine McCluskey from LBNF project
- Marzio Nessi (CERN), David Lissauer and Jim Stewart (BNL)
- Mike Headley and Josh Willhite from SDSTA

EFIG critical path items: cryostat and cavern layout

- Inherited from previous CD-1 approval process, we already have documentation for a “10+30” kiloton design with two rock-supported cryostats

- For the CD-1 refresh in July, want to present a cavern layout consistent with the new modular staged approach with four (nearly) identical 10 kt (fiducial) cryostats: “4 x 10”

- Want also to explore a steel-supported cryostat design, more amenable to scale-up from efforts already planned for the CERN neutrino platform

EFIG critical path items: cryostat and cavern layout

- The cavern configuration of detectors, cryostats, cryosystems, and other utilities has strong implications for the staging of the overall project

- It also has strong implications for what will constitute “Phase 1” for which we will seek CD-2a/CD-3a approval in November

- Both the definition of Phase 1 and the overall staging plan need to be consistent with our still-evolving expectations of DOE funding profiles and international contributions

Steel-supported cryostats for CERN neutrino platform

The outer structure

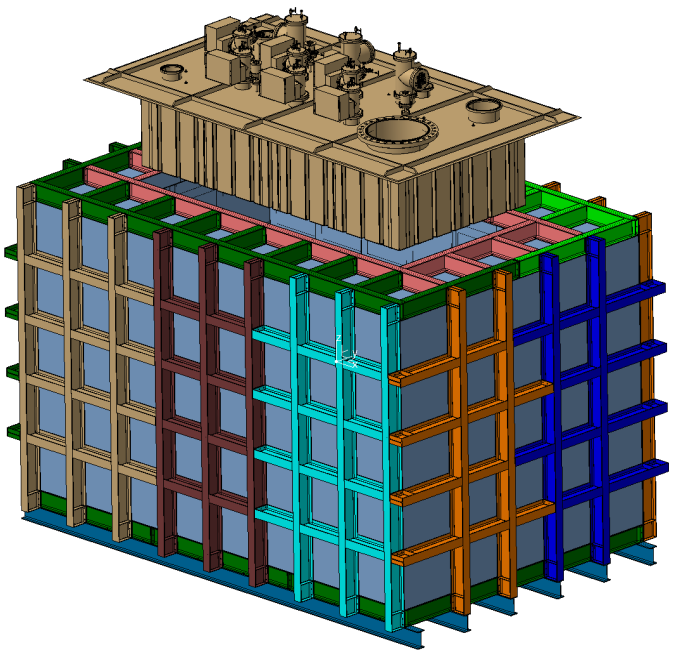

First 50 t memebrane cryostat under construction at CERN

Steel-supported cryostat design for LBNF

4 LBNF Cryostats extrapolation

Inner dimension (liquid +gas):

- **L = 62.00 m**
- **W = 15.10 m**
- **H = 14.00 m**

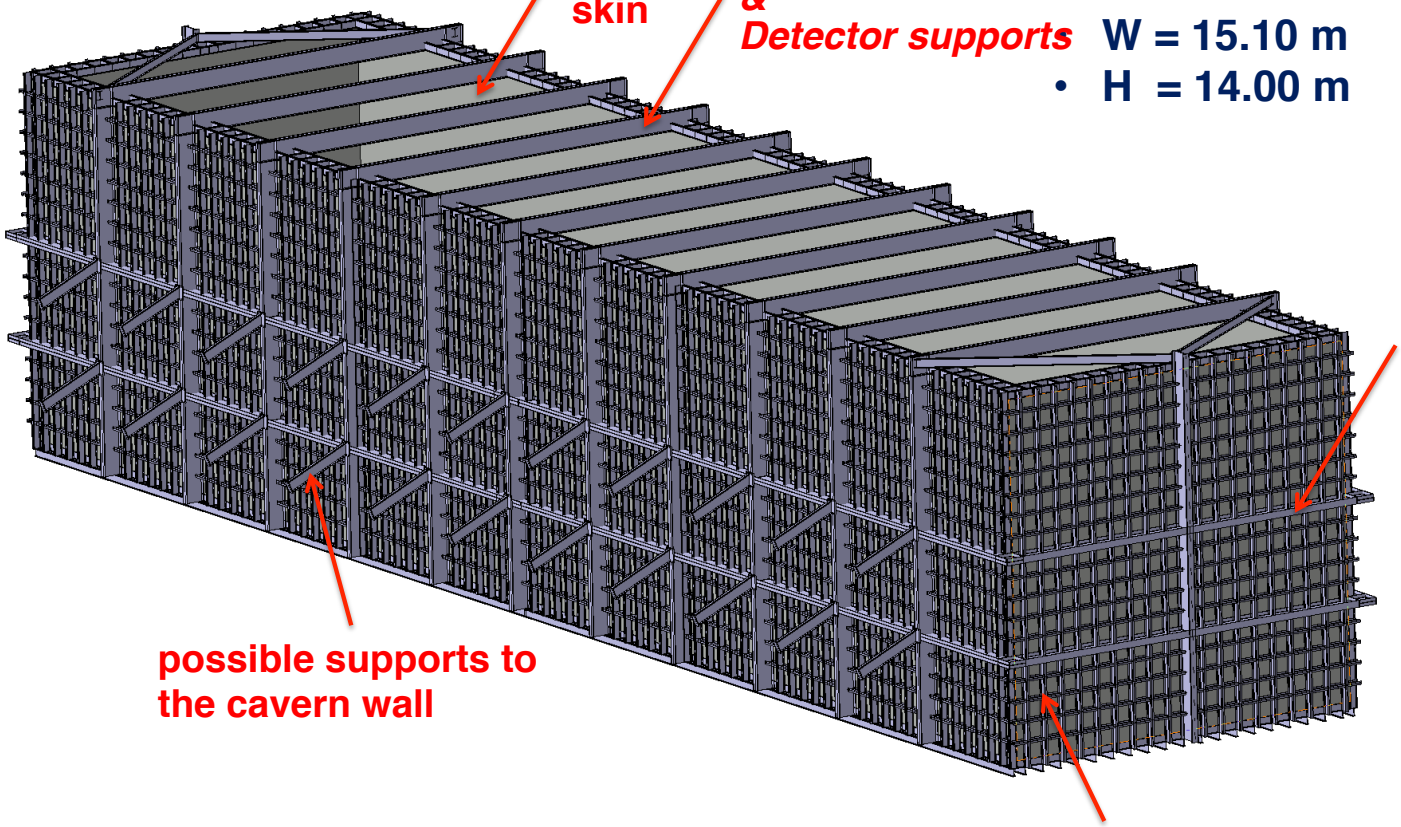

LAr = 17'432 tons (95% liquid)

High-level requirements affecting cavern layout (examples)

- Capacity to accommodate a minimum of 40 kt fiducial mass modular liquid argon TPC
- Target first 10 kt cryostat ready for detector installation on time scale of 2021
- Four identical (with minor differences) cryostats of 10 kt fiducial volume
- Projects' schedules shall reflect future continuous expansion to full detector size
- Ability to accommodate either single- or dual-phase TPC alternatives
- Lay-down areas shall be provided for staging detector installation, including space for clean rooms at the entry point into the cryostat for detector installation

High-level requirements affecting cavern layout (examples)

- In choosing the locations of the different spaces (cryostat pit, cryogenic systems, conventional facilities infrastructure, detector systems and laydown areas) it is required that they be positioned to minimize the interference between activities in one with those in another
- Requirement to be able to slosh LAr from one cryostat to another during the phases: 2nd cryostat available for Ar transfer at start of 1st detector filling
- Safe access and egress shall be provided for all personnel from any location during all phases of construction, commissioning and operation in any underground space
- Only areas which are accessed infrequently and by specially trained personnel may be higher than ODH class 1

High-level considerations affecting cavern layout

- It is preferable that the caverns be within the zone explored by the geotechnical drilling program
- It is preferable that the caverns stay out of zone 4, which contains rhyolite dikes

The EFIG and the engineering teams have considered 8 different cavern layouts, with detailed comparisons against the high-level requirements and considerations

Ranking and cost/schedule summary

	Option 1	Option 5	Option 5a	Option 5b	Option 6	
Earliest possible 10 kT detector	4	2	1	3	5	5a takes utility space off critical path. 5 is the simplest first phase. 1 & 5b 2 caverns to be useful. 6 requires all caverns in phase 1.
Earliest possible 40 kT total	3	2	1	3	2	5a has only the main 2nd cavern to complete. 5 adds an antechamber. 6 is all completed in phase 1, but still not as quickly as 5a (not actually studied). 1 & 5b spread excavation of caverns 3 and 4 over time.
Best isolation between cryogenics and detector/cryostat	3	3	1	1	2	5a and 5b provide completely independent caverns for cryogenics. 6 is somewhat independent, while 1 and 5 share space
Best isolation between excavation and outfitting in phases	3	1	1	2	N/A	5 and 5a establish a full and independent access and ventilation path in each phase. 5b is mostly indpendant, but mixes air in the utility space. 1 is challenging to isolate, 6 is all done in one phase.
Best stress distribution	4	1	2	3	5	Any could be spread out, but 5 is the most efficient use of adequate spacing. 6 may not be possible due to stresses.
Fit within geotechnically studied area	4	1	2	3	2	5 is the only options that fits entirely within the studied area. Other options get more and more volume outside that area.
Fit within preferred rock mass (not domain 4)	2	1	1	2	1	1 and 5b extend beyond the boundary. All others do not.
Excavation Cost to establish space to enable filling of 10 kT	$129M	$107M	TBD	N/A	N/A	
Excavation Duration to establish space to enable filling of 10 kT	22 -37mo	20 mo	17 mo	N/A	N/A	Option 1 can be done faster by overlapping excavation
Total Cost	$179M	$157M	TBD	N/A	N/A	
Total Duration	60 mo	36 mo	28 mo	N/A	N/A	

Criteria "weighted" based on importance. Rankings are based on the assumptions for layouts and phasing.

Cavern configuration for LBNF

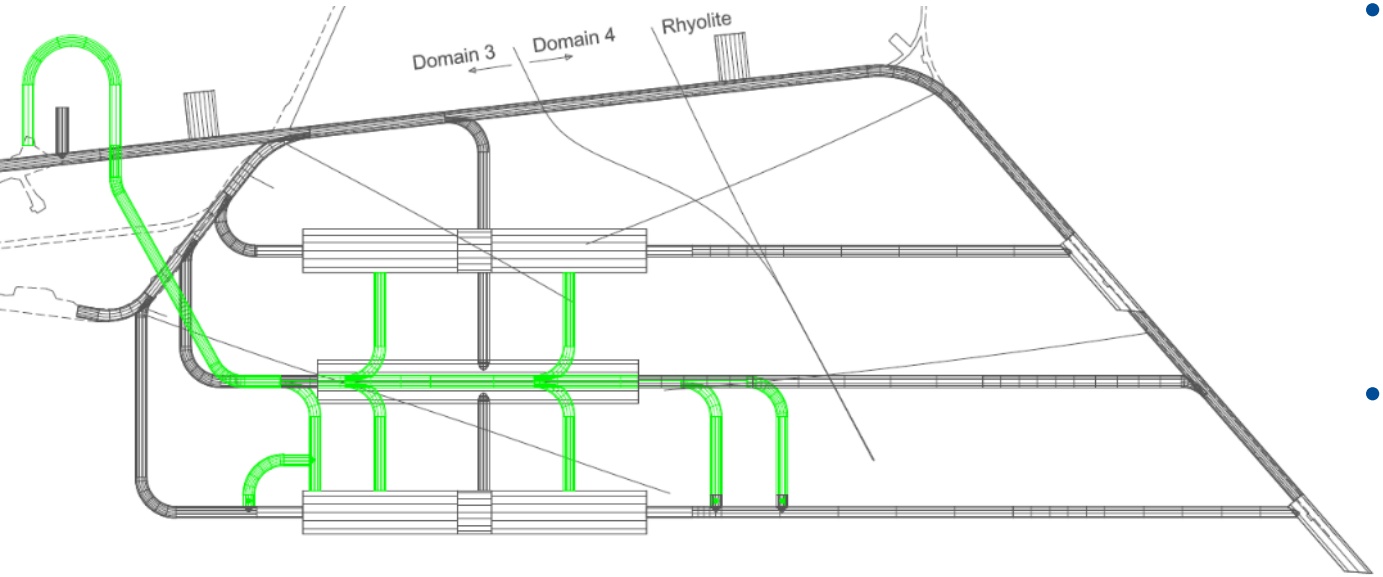

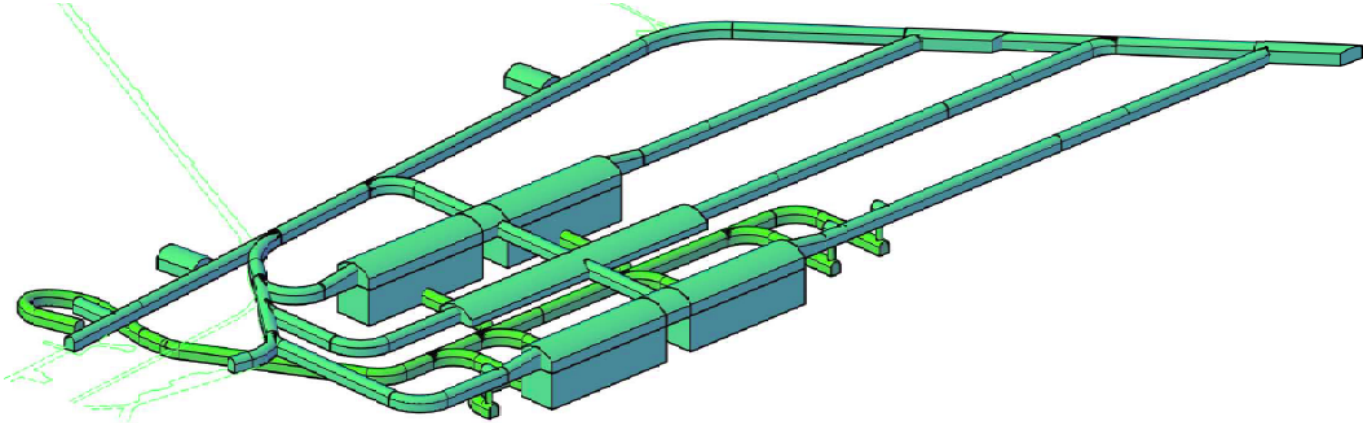

- Two parallel caverns each have two 10 kt detector pits with a laydown space in between
- The CF utilities and cryogenics are in a separate parallel chamber, thus no conflict with cryostat & detector laydown

Cavern configuration for LBNF

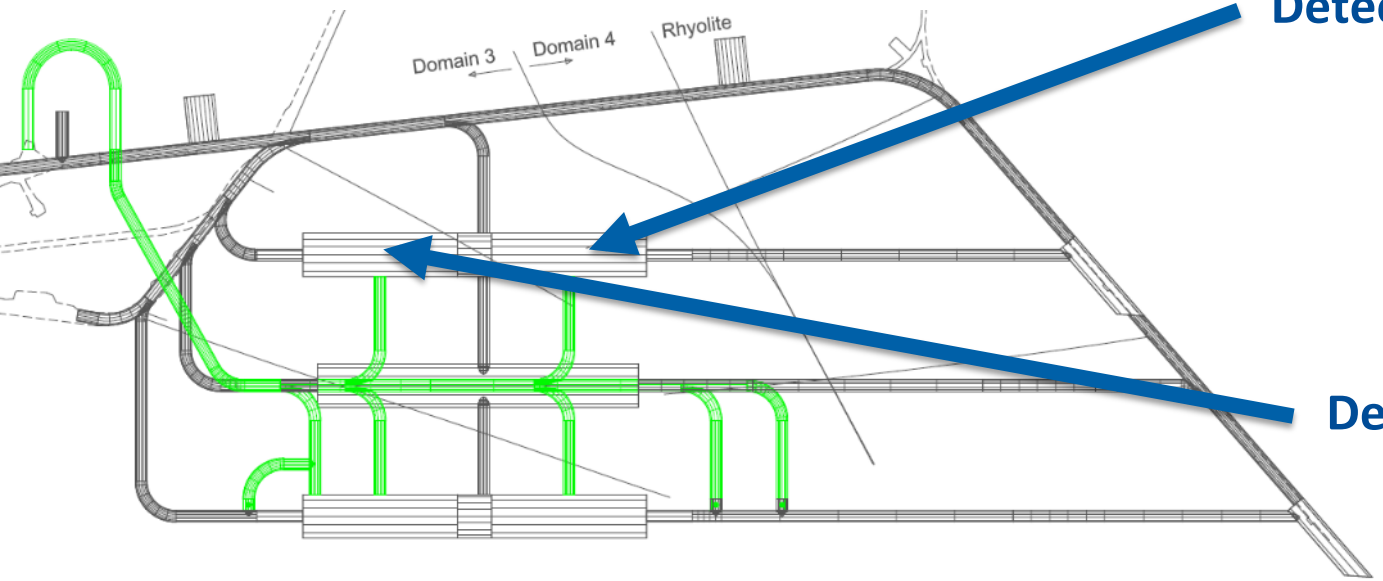

Detector 1 goes here

Detector 2 goes here

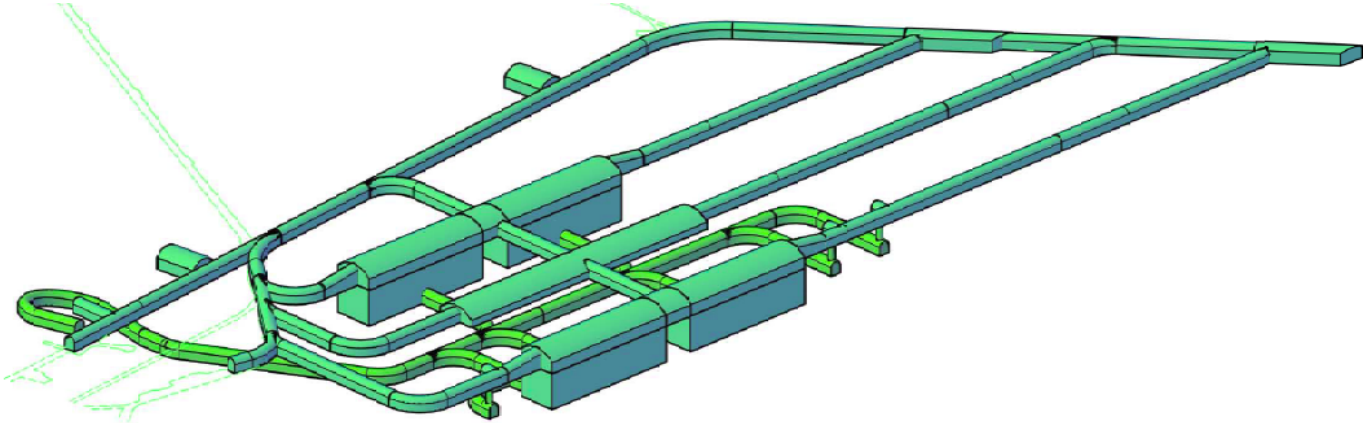

Cavern configuration for LBNF

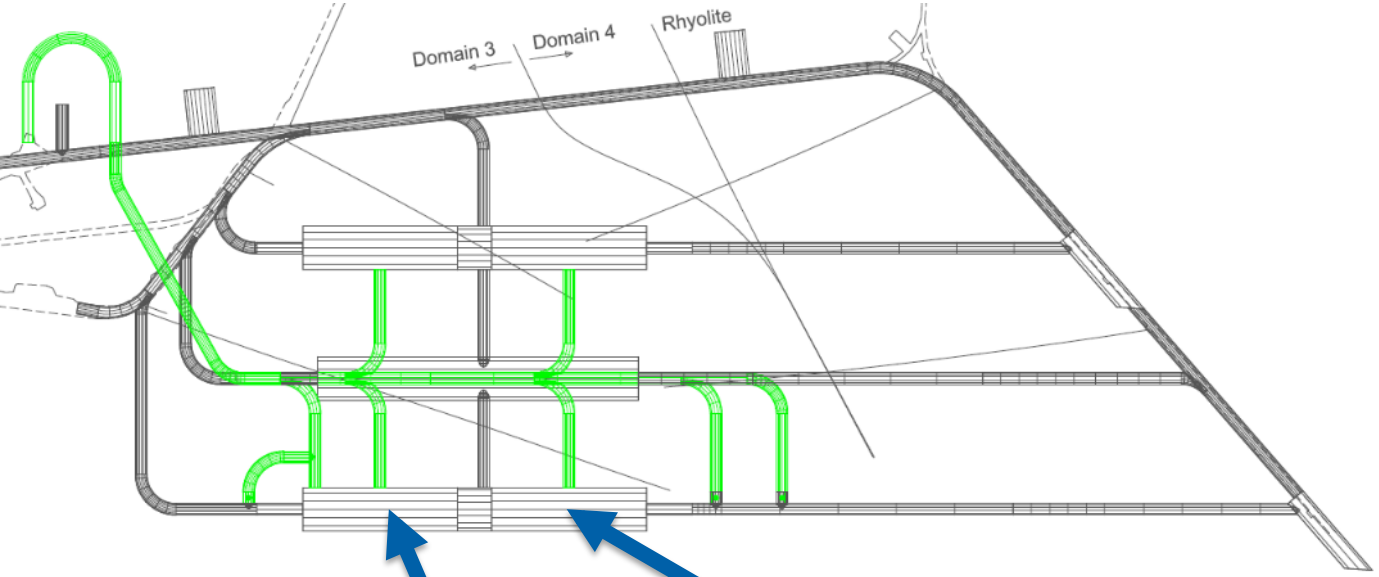

Detector 4 goes here

Detector 3 goes here

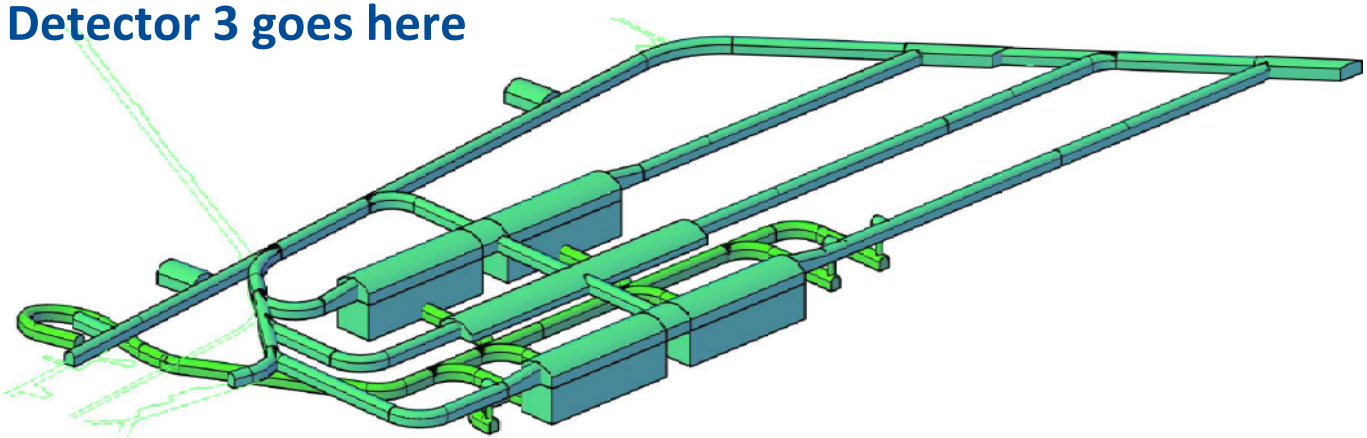

Cavern configuration for LBNF

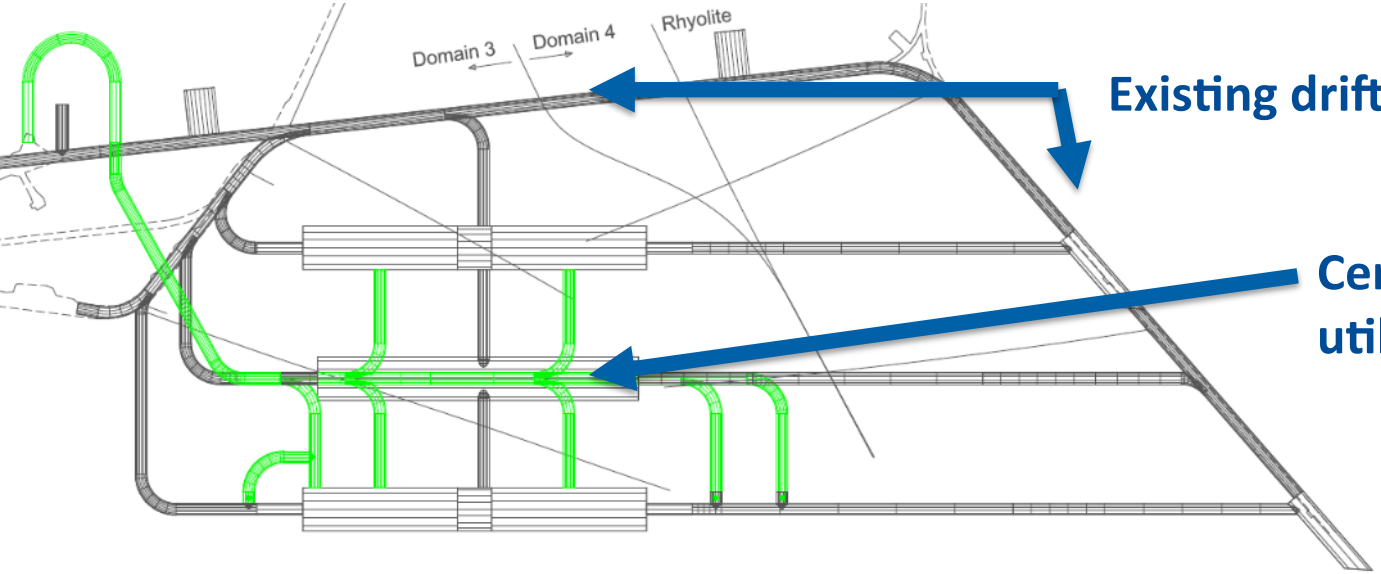

Existing drifts at 4850 foot level

Central cavern for utilities and cryo

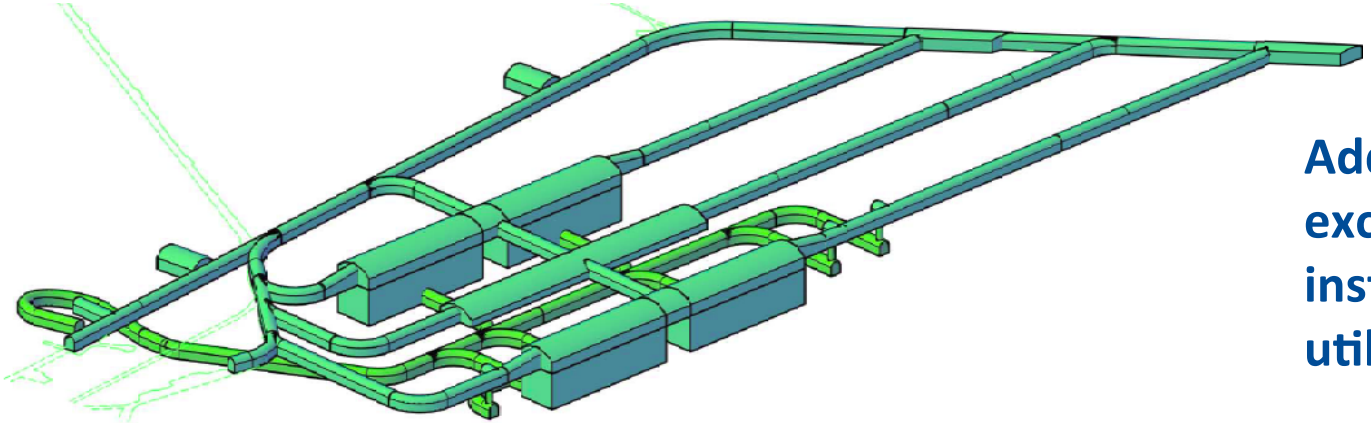

Additional drifts for excavation, air flow, installation, connecting utilities to detector pits

Cavern configuration for LBNF

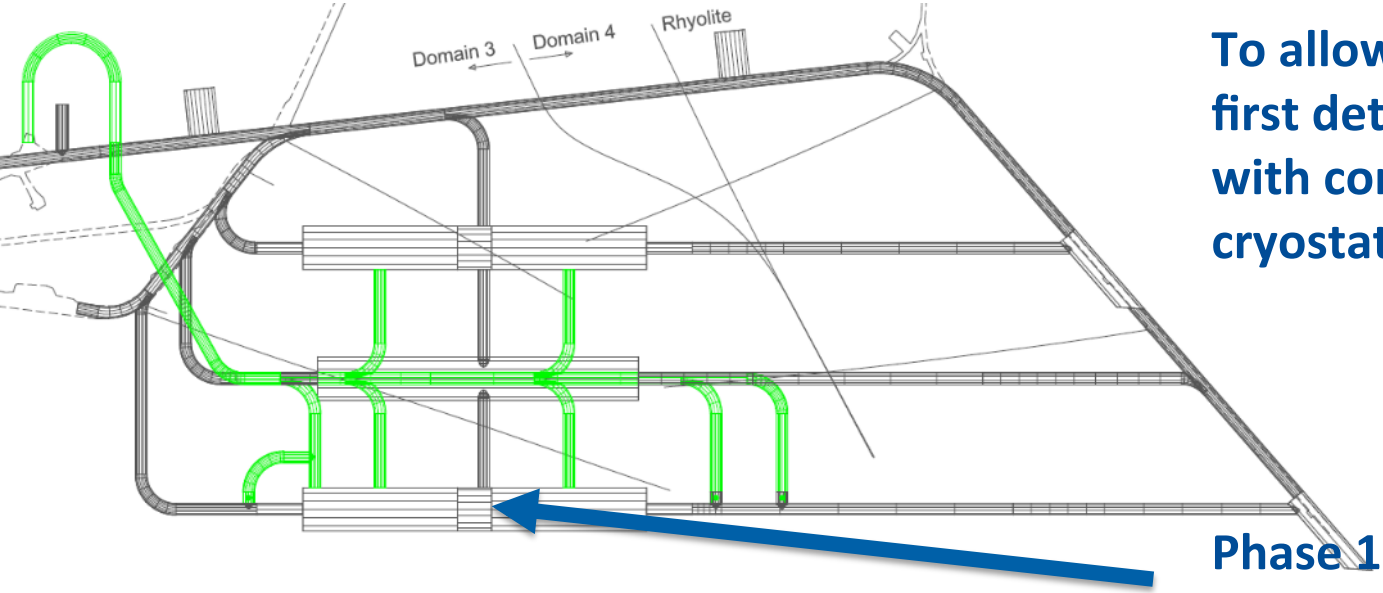

To allow LAr sloshing, filling of first detector would coincide with completion of second cryostat

Phase 1 could include excavating everything *except* the cavern for detectors 3,4

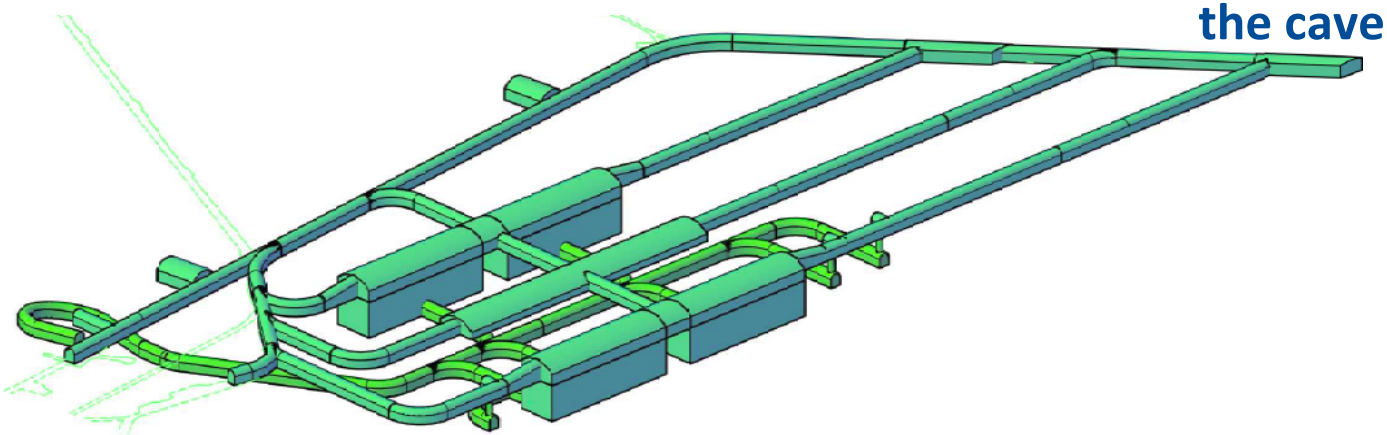

Issues under discussion

- Relative staging of the four far site detectors, the 1.2 MW beamline at FNAL, and the near detector(s)

- Location of the LAr purification systems: central utility cavern or mezzanines in the detector halls?
- Are the LAr purification systems part of DUNE or part of LBNF?