NSLS-II Beam Diagnostics Control System

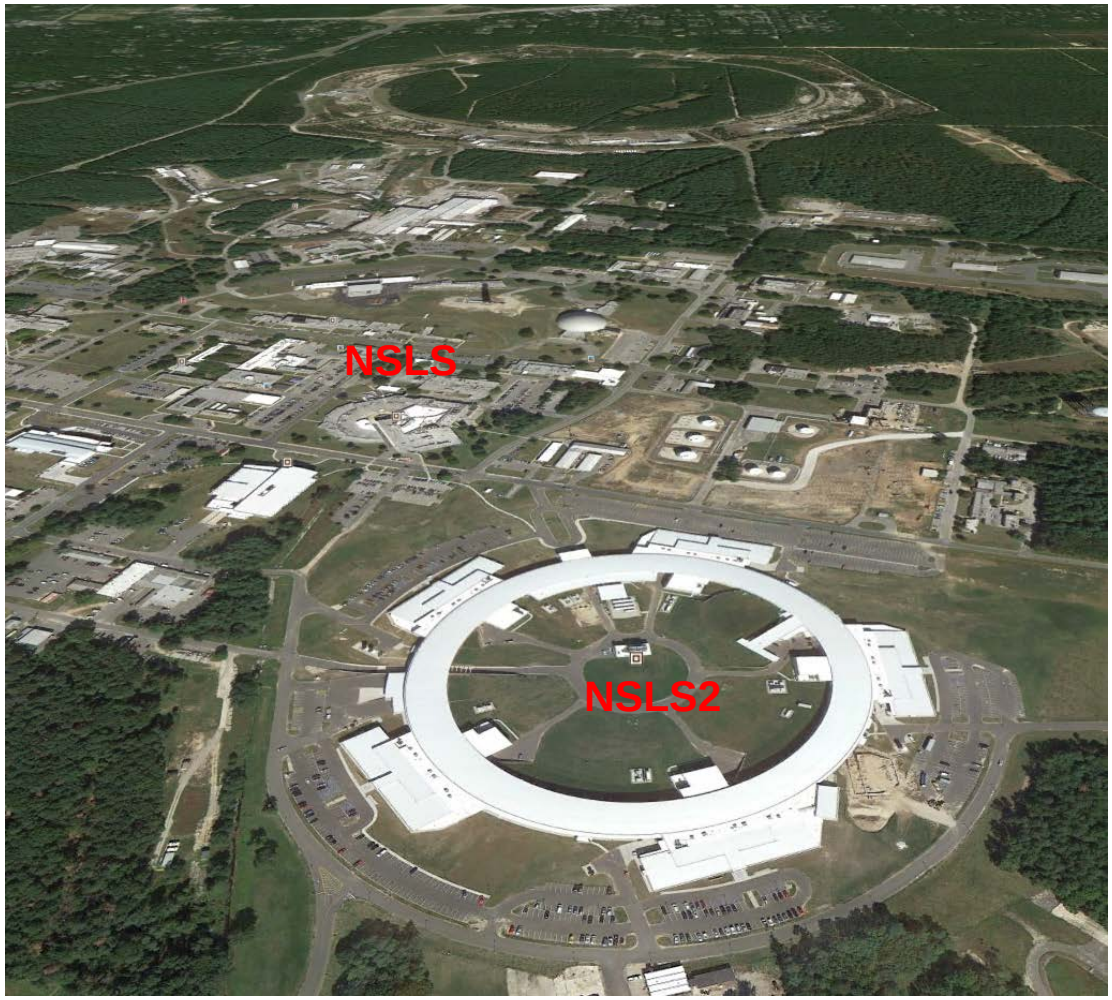

Yong HU, NSLS-II Controls Group, BNL

EPICS Meeting @ FRIB, May 19, 2015

U.S. DEPARTMENT OF ENERGY

BROOKHAVEN NATIONAL LABORATORY
BROOKHAVEN SCIENCE ASSOCIATES

Outline

1. **System overview**
   - Functionality, architecture, statistics (device counts)
2. **Control interfaces**
   - Solution: standardization and re-utilization
   - Hardware & software selection: electronics and EPICS IOC
3. **Interfaces to other systems**
   - Interfacing to timing system, protection system
4. **Machine commissioning**
   - Diagnostics and controls have played a vital role

Understanding of beam diagnostics

- **Beam diagnostics is also named beam instrumentation**

- **What's beam diagnostics? If accelerator was a human,**
  - **Diagnostics are the eyes: see the fascinating particle beams;**
  - **Vacuum is the environment: we breathe air, accelerator breathes vacuum;**
  - **Magnet and power supply are the muscles?**
  - **RF gives energy;**
  - **…**

- **It is most about measurements (DAQ): tens of beam parameters to be measured**
  - **bunch structure(filling pattern), bunch charge, beam current, beam position / orbit, beam size/profile, energy & energy spread, tunes, emittance, bunch length, beam losses, etc.**

- **Diagnostics is not all about measurements, some actually control the beam:**
  - **Aperture controls: energy slits at transport-lines; scrapers at injection straight;**
  - **Feedback controls: fast orbit feedback (FOFB); bunch-by-bunch feedback;**

Overview: functionality

- **To measure beam quality/parameters from Linac to Storage Ring:** **bunch charge, bunch structure, beam position/orbit, beam size/profile, circulating beam current, emittance, bunch length, tunes, energy spread, etc.**

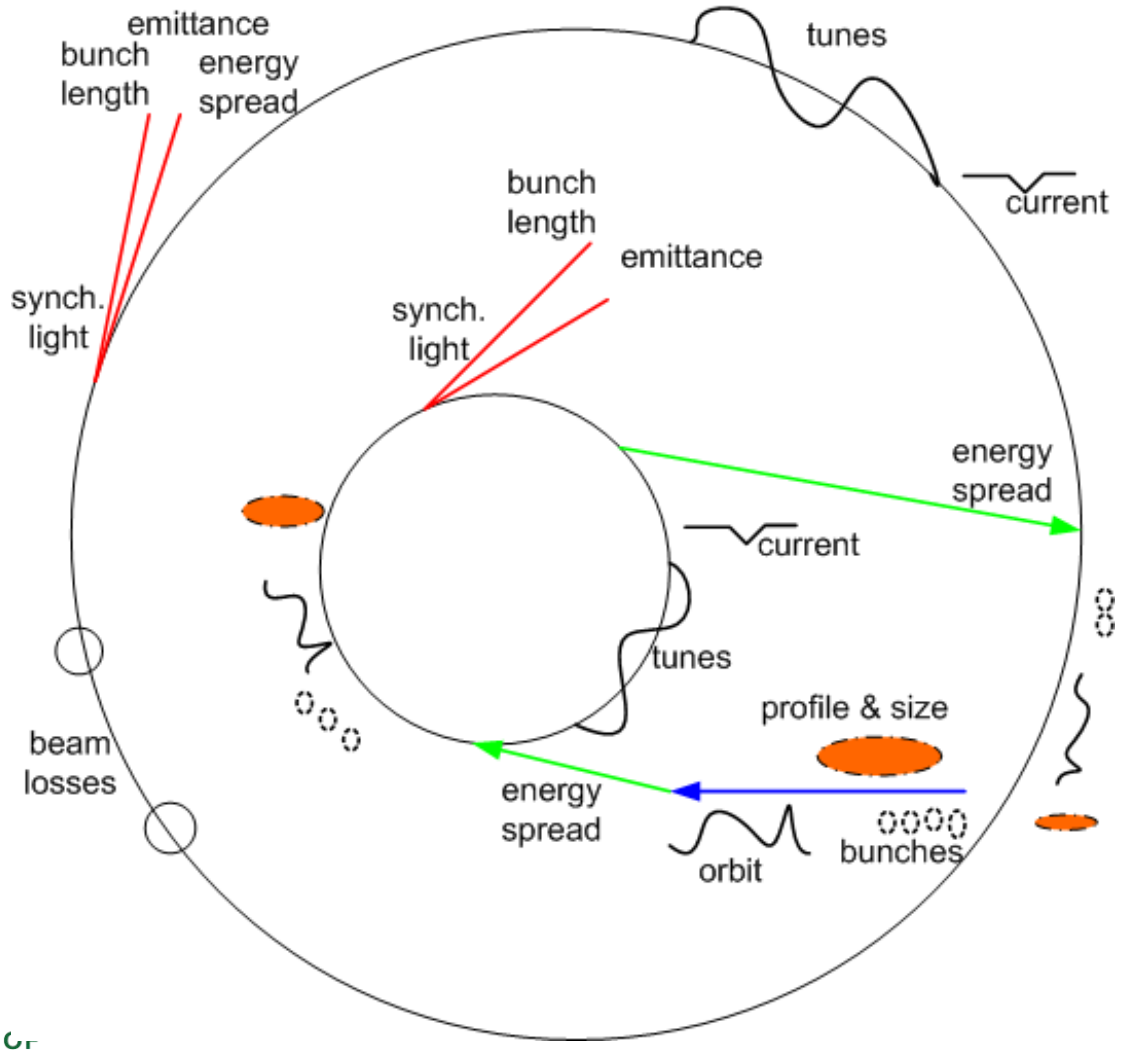

U.S. DEPARTMENT OF ENERGY
BROOKHAVEN NATIONAL LABORATORY
BROOKHAVEN SCIENCE ASSOCIATES

Overview: architecture -- 3C

- **Combination**: beam monitors + controls/DAQ + HLA
- **Collaboration**: Instrumentation Group + Controls Group + Physics Group
- **Communication**: this is the best way to make everything happen

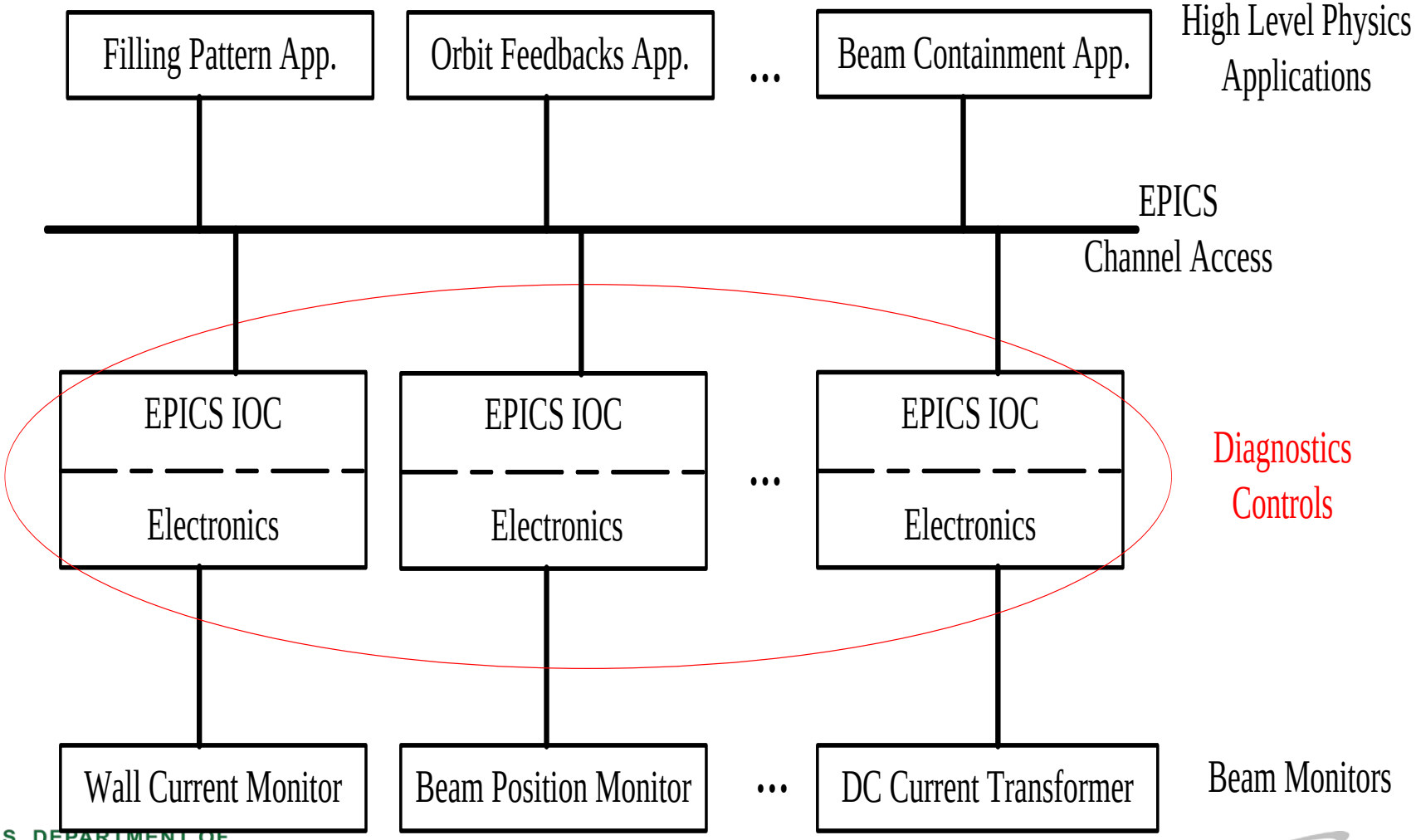

U.S. DEPARTMENT OF ENERGY
BROOKHAVEN NATIONAL LABORATORY
BROOKHAVEN SCIENCE ASSOCIATES

Overview: statistics

- **NSLS-II beam diagnostics is a diverse and complicated system:**
  - **~ 17 different types of beam detectors: BPM, Flag, FCT, DCCT, ICT, etc.;**
  - **~ 380 total device count: 295 BPMs + 33 Flags + 5 FCTs + 4 ICTs + 2 DCCTs +…;**

	Linac	Ltb	Booster	BtS	SR
WCM	5				
Screen/Flag	6	9	6	9	3
BPM	5	6	37	7	240
Bergoz FCT		2	1	2	
Bergoz ICT		2		2	
Energy Slit		1		1	
Faraday Cup	1	2		1	
Bergoz DCCT			1		1
Streak Camera					1
Visible Light Monitor			1		1
Pinhole system					2
Tune Monitor			1		1
Transverse Feedback System					1
Beam Loss Monitor					5
Beam Scrapers					5
Photon/x-ray BPM					2 per front-end

BPM: beam position monitor

WCM: wall current monitor

Ltb: Linac to Booster transfer-line

BtS: Booster to Storage Ring transfer-line

SR: Storage Ring

Flag for beam profile / imaging

Control interfaces: solution

- **Standardization:** classify ~17 types of beam monitors into 7 groups of control interface:
  1) analog output with high-bandwidth (>500 MHz): WCM, FCT, etc.
  2) analog output with low-bandwidth (<10KHz): Bergoz DCCT, ICT, beam loss, etc.
  3) simultaneous 4-channel RF signals: BPM;
  4) Gigabit-Ethernet CCD camera interface: flags, diagnostics beamlines;
  5) stepper motor: energy slit, scraper, optics in diagnostic beamlines;
  6) Windows- or GPIB-based instruments: spectrum analyzer in tune monitor, etc.
  7) miscellaneous I/Os: simple digital I/O, simple DAC, simple RS-232, etc.

- **Re-utilization:** COTS hardware + EPICS software
  - Whenever possible, NSLS-II diagnostics controls buy commercial off-the-shelf hardware to reduce cost as well to achieve better reliability
  - Buy EPICS supported hardware whenever possible
  - Exceptions: in-house BPM electronics + epics driver for compactPCI digitizer ics710
  - Integration is the key

Controls Interfaces: electronics and IOC

Beam Monitor	Diagnostics Electronics	IOC platform
WCM & FCT & FC	Acqiris DC252 (2GHz bw, 10-bit, 4~8GS/s)	cPCI/Linux
DCCT & ICT	1)GE ICS-710-A (24-bit, 200KS/s, 8-ch) 2)Allen-Bradley PLC (DAC, Digital I/O)	cPCI/Linux
BPM	In-house BPM receiver	PC/Linux
Prosilica GigE Camera	PC/Linux	PC/Linux
Stepper-motor-based	Delta Tau GeoBrick LV PC	PC/Linux
Instrument controls	Windows-based network/spectrum analyzer	PC/Linux
Misc: digital I/O, DAC, temperature sensor	Allen-Bradley PLC	PC/Linux

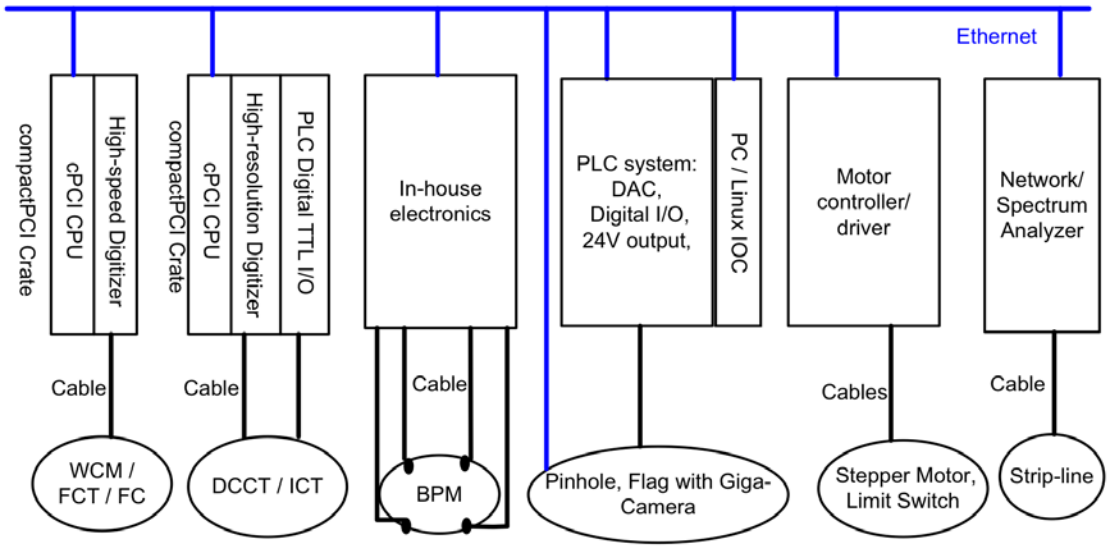

U.S. DEPARTME
ENERGY
BROOKHAVEN NATIONAL LABORATORY
BROOKHAVEN SCIENCE ASSOCIATES

Controls Interfaces: in-house BPM receiver

- **One dedicated control engineer**: Kiman Ha
- **Latest FPGA technology:** Vertex-5 / Vertex-6;
- **Embedded event timing receiver:** better synchronization, global time-stamp;
- **Open hardware & software:** the DFE (digital front-end) with FPGA code will be open;
- **In-house expertise:** good for maintenance, upgrades, etc.
- **Seamless fast orbit feedback (FOFB)integration:** the BPM digital board (DFE) serves a common platform for many applications requiring fast and reliable data;
- **High-performance:** 0.2um resolution @ 10Hz, 0.4 um@10KHz, 1um@380KHz

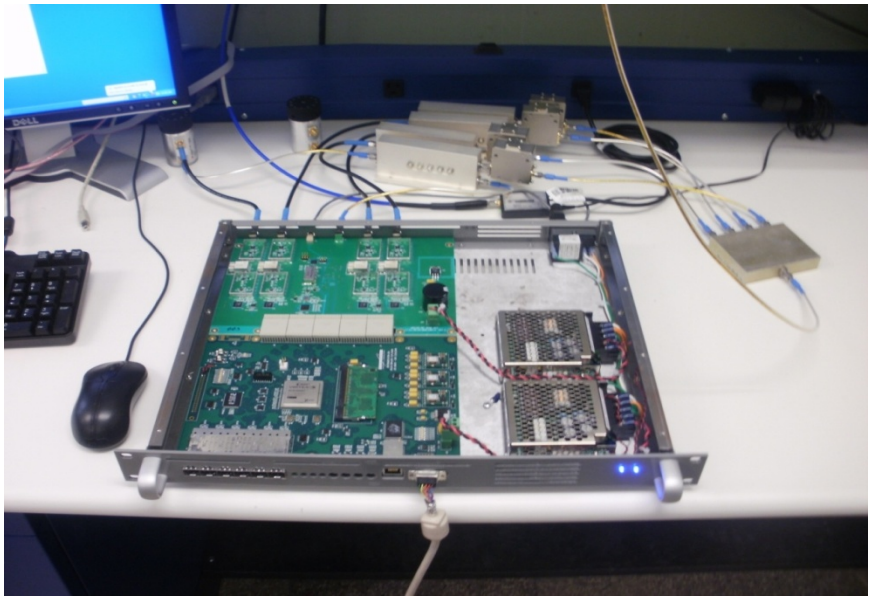

Interfaces to other systems

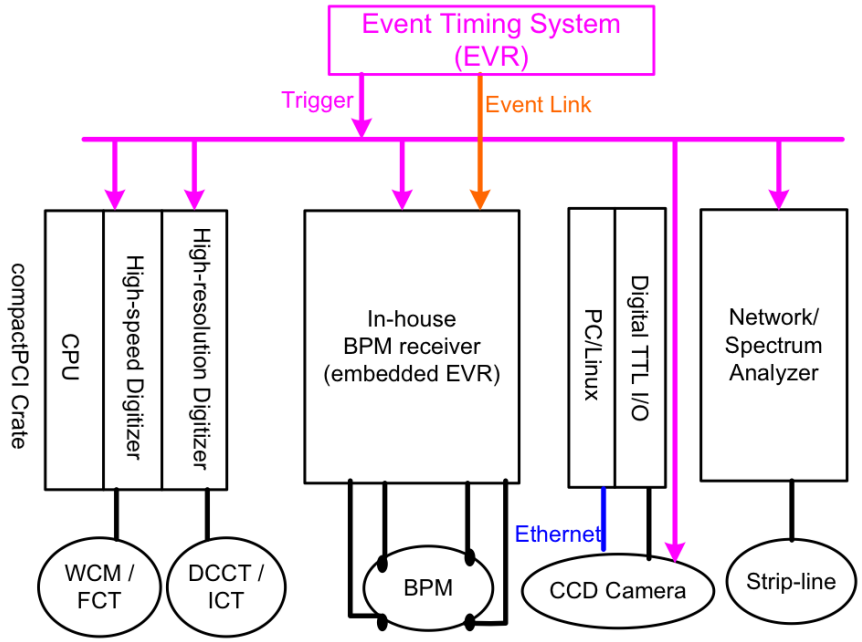

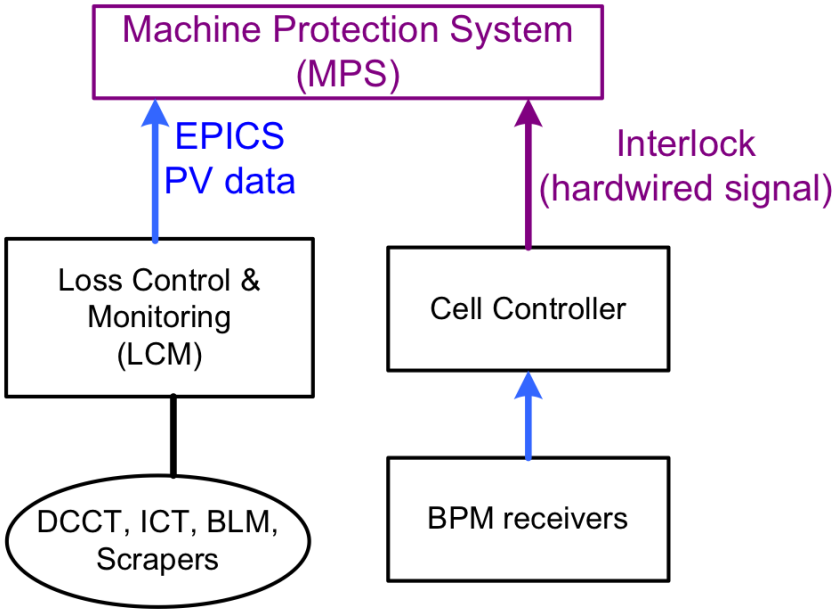

To capture the electron beam signal at the right time, beam monitors should be sampled and synchronized to the passage of the beam. This function can be achieved by using Event Timing System to deliver delayed-trigger or clock signal to the diagnostics electronics.

Diagnostics controls should send hardwired interlock signals, to machine protection system (MPS) if any specific parameter, such as beam positions, beam loss rate, beam current, is out of range.

Machine commissioning: first beam from Linac

- Dec-06-2013: Start of Linac & Booster commissioning
- Feb-19-2014: Booster commissioning complete successfully
- Mar-31-2014: first turns in the Storage Ring
- Jul-11-2014: 50mA stored beam achieve with SC RF

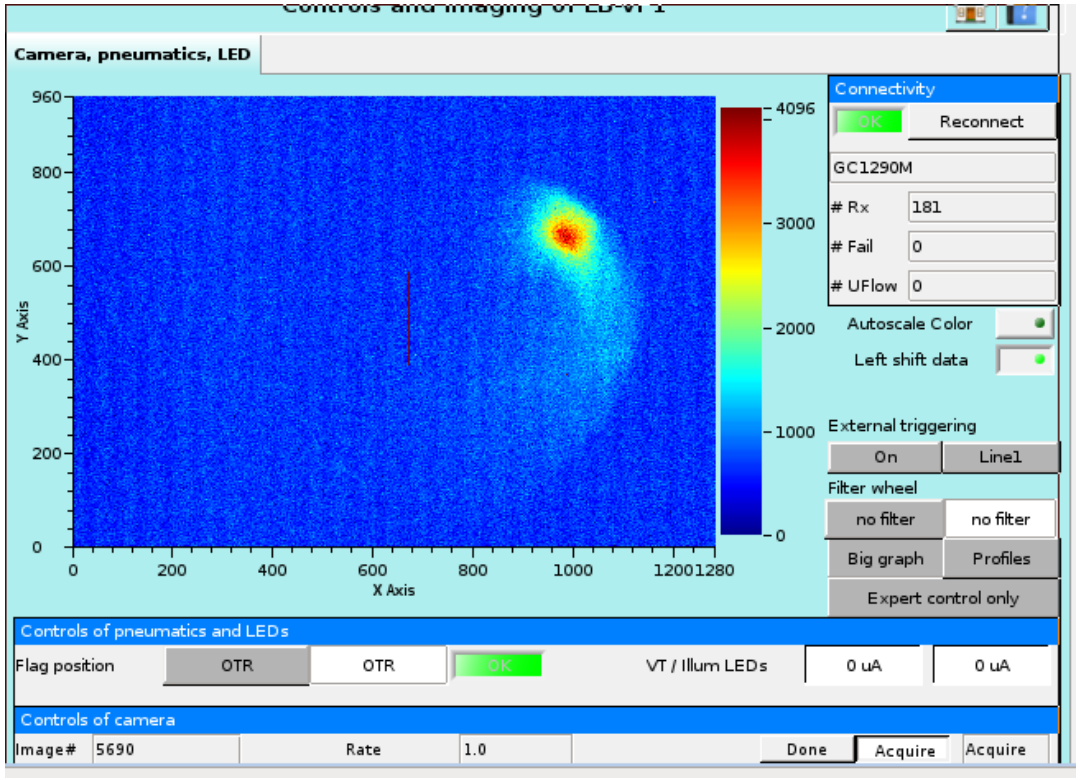

First beam observed by the first Flag in Linac

U.S. DEPARTMENT OF ENERGY
BROOKHAVEN NATIONAL LABORATORY
BROOKHAVEN SCIENCE ASSOCIATES

Machine commissioning: first beam in the Storage Ring

- Dec-06-2013: Start of Linac & Booster commissioning
- Feb-19-2014: Booster commissioning complete successfully
- Mar-31-2014: first turns in the Storage Ring
- Jul-11-2014: 50mA stored beam achieve with SC RF

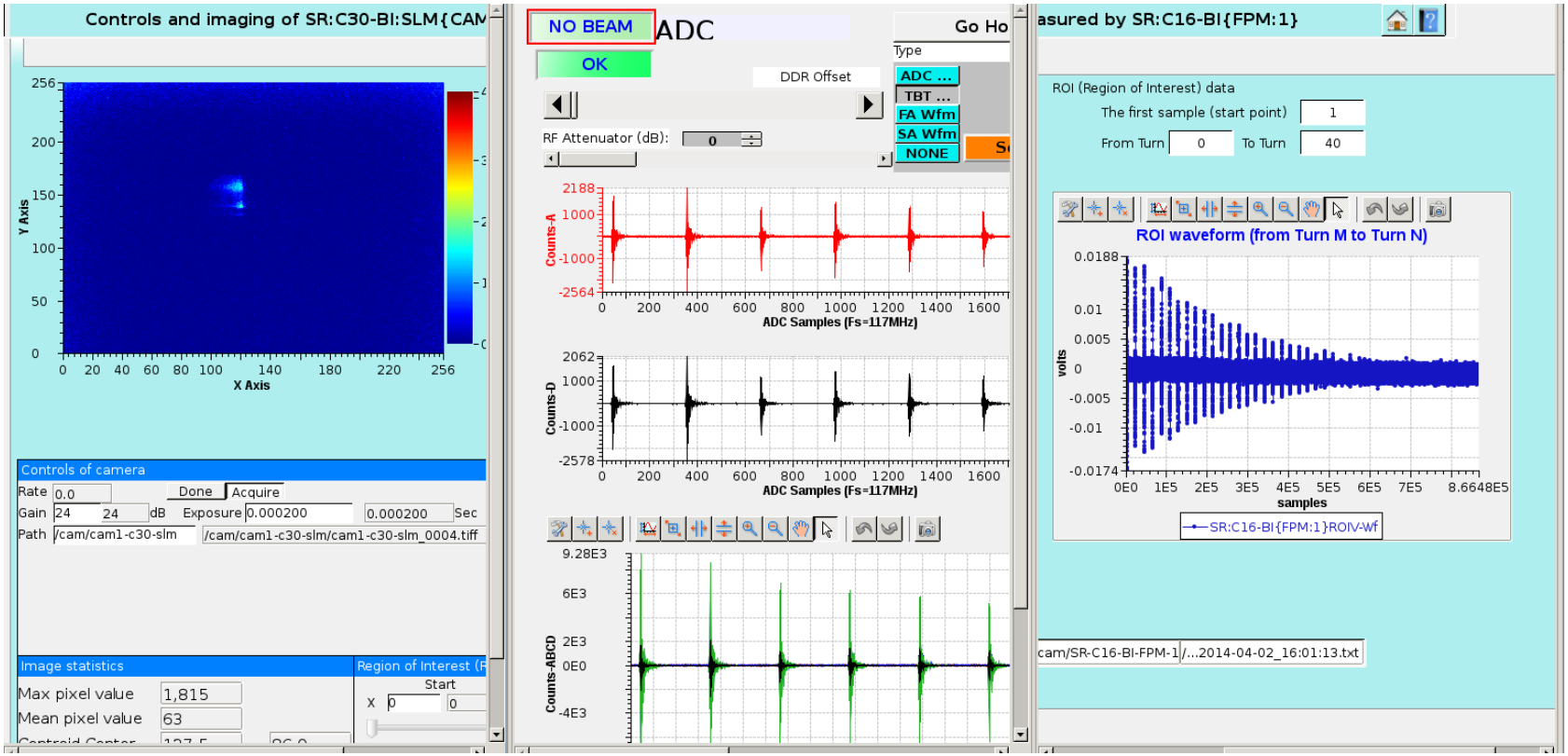

First turns in the Ring observed by Synchrotron Light Monitor, BPM, Fill Pattern Monitor

Machine commissioning: 50 mA stored beam

- Dec-06-2013: Start of Linac & Booster commissioning
- Feb-19-2014: Booster commissioning complete successfully
- Mar-31-2014: first turns in the Storage Ring
- Jul-11-2014: 50mA stored beam achieved with super-conducing RF
- 200 mA by April 2015

Give me some light, away!
Lights, lights, lights!
-- By Shakespeare

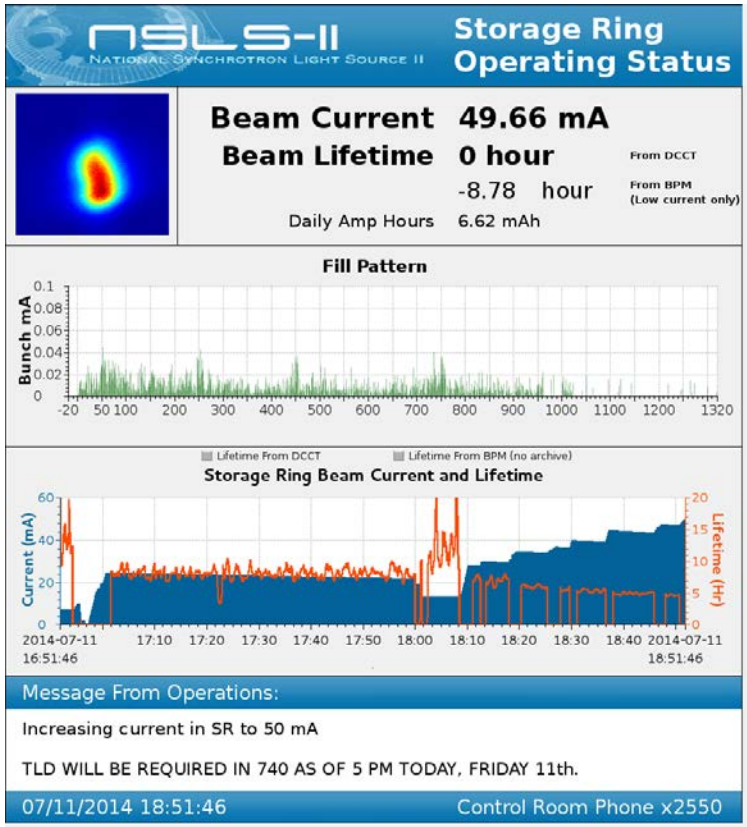

50mA stored beam achieved with SC RF

Summary

- **Everything just worked, has been working well, and will be working better!**

- **NSLS-II beam diagnostics control system is completely and straightly EPICS-based: no middle-layer such as Labview**

- **Many people were involved, working as a team to make this happen. Special thanks to Huijuan Xu who gave lots of help during system prototype.**

NSLS-II facts

- **Is NSLS-II world-class?**
  - **Yes, it is. However, almost all third-generation synchrotrons claim they're world-class. Even NSLS claims it's 'world-class'!**
- **Is NSLS-II the best in 3rd-generation light sources? It depends:**
  - **It will have the lowest emittance at 0.6nm-rad eventually (Petra-III: 1nm-rad);**
  - **It will have the smallest beam: ~3um beam size;**
  - **It will have the highest beam current: 500mA;**
  - **It will provides the highest spectral brightness at 10^21 ph/mm^2/mrad^2/s/0.1%BW;**
  - **It is not the biggest Storage Ring, it's the forth (Petra-III, Spring-8, APS);**
  - **It is not the highest energy (Spring-8 is the first, then APS, Petra-III…);**
- **Is there any breakthrough in NSLS-II?**
  - **Not really. The most important feature of NSLS-II is emittance reduction by using damping wigglers (8pm-rad @ vertical & 1nm-rad@ horizontal);**
  - **However, Petra-III in Germany is the first operational (in 2009) synchrotron light source using this technique which was widely used in high energy physics**
  - **Although NSLS is 2nd-generation, it made a breakthrough: Chasman-Green lattice, also named double bend achromat (DBA) which is still used at NSLS-II;**