The Mu2e Project

R. Ray - Mu2e Project Manager

DOE S&T Review of Scientific User Facilities

June 30 – July 2, 2009

Fermilab

Mu2e

- Mu2e is designed to search for coherent muon-to-electron conversion in the field of a nucleus.
  - No emission of neutrinos
  - Nucleus remains intact
- We have observed neutrino oscillations, so lepton flavor is not conserved.
- Charged leptons *must* mix through neutrino loops.
  - But the mixing is so small, it's effectively forbidden.

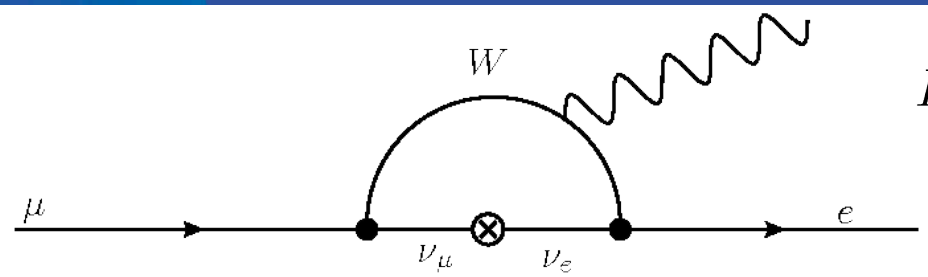

$$Br(\mu \to e\gamma) = \frac{3\alpha}{32\pi}\left|\sum_\ell V^\star_{\mu\ell} V_{e\ell} \frac{m^2_{\nu_\ell}}{M^2_W}\right|^2 \leq 10^{-54}$$

No standard model pollution! An observation is unambiguous evidence for new physics.

P5

The importance of the search for charged lepton flavor violation through muon-to-electron conversion was emphasized by P5:

> "A muon-to-electron conversion experiment at Fermilab could provide an advance in experimental sensitivity of four orders of magnitude. The experiment could go forward in the next decade with a modest evolution of the Fermilab accelerator complex. Such an experiment could be the first step in a world-leading muon-decay program eventually driven by a next-generation high-intensity proton source. Development of a muon-to-electron conversion experiment should be strongly encouraged in all budget scenarios considered by the panel."

Experimental Technique

Stop beam of μ^- in an aluminum target. Make muonic Al. One of three things can happen:

- Decay in Orbit (DIO) 40%
  - Continuous spectrum
- Muon capture on nucleus 60%
  - Nuclear breakup - emission of p, n, γ
  - Rate issue in tracker
- Coherent, neutrinoless μ to e conversion
  - Monoenergetic 105 MeV electron - endpoint of DIO spectrum.

Bohr radius ≈ 20 fm
Al nuclear radius ≈ 4 fm
Lifetime: 864 ns

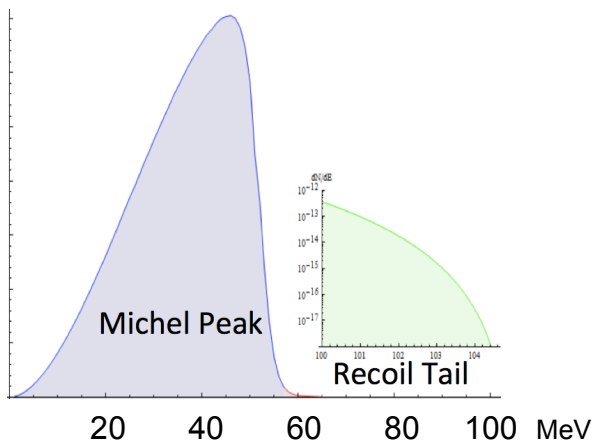

What do we measure?

$$\mathcal{R} = \frac{\Gamma(\mu^- N \rightarrow e^- N)}{\Gamma(\mu^- N(Z) \rightarrow \nu_\mu N(Z-1))}$$

- Numerator - Signal is mono-energetic 105 MeV electron.
- Denominator - Rate of muon capture on stopping target.
- Sensitivity for a 2 year run (2×10^7 s)
  - 2×10^{-17} single event sensitivity
  - $< 6 \times 10^{-17}$ limit at 90% C.L.
- 10,000 times better than previous limit (SINDRUM II)

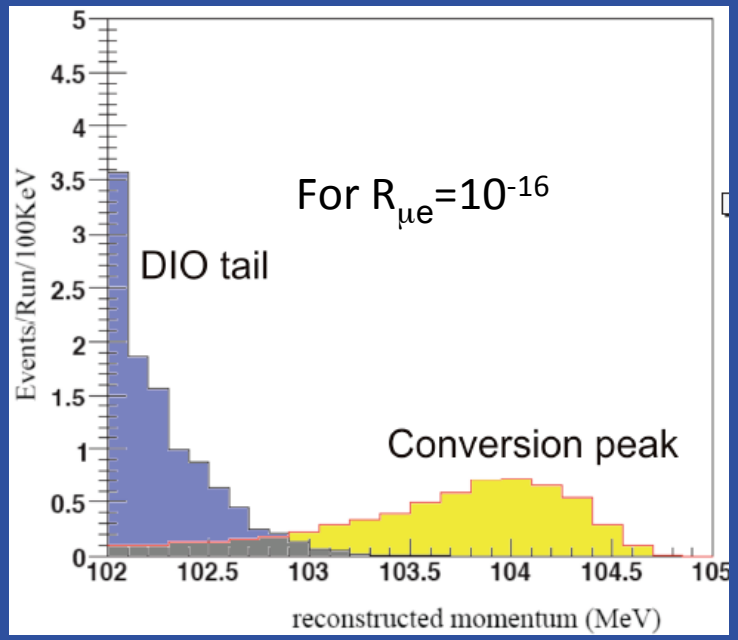

Fermilab

History Of CLFV Searches

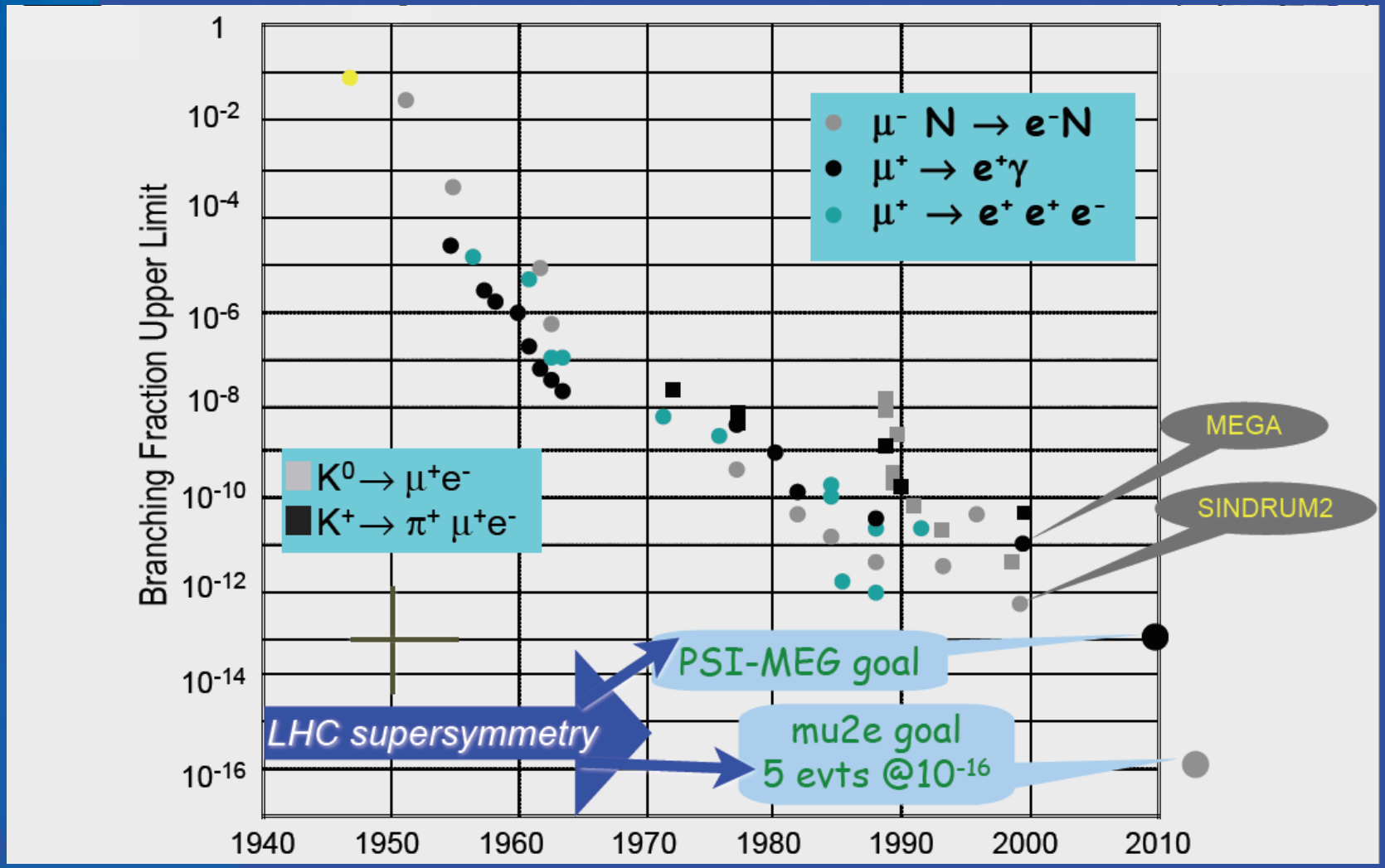

What Drives the Design of Mu2e?

Considerations of potential sources of backgrounds specify much of the design of the beam and experimental apparatus.

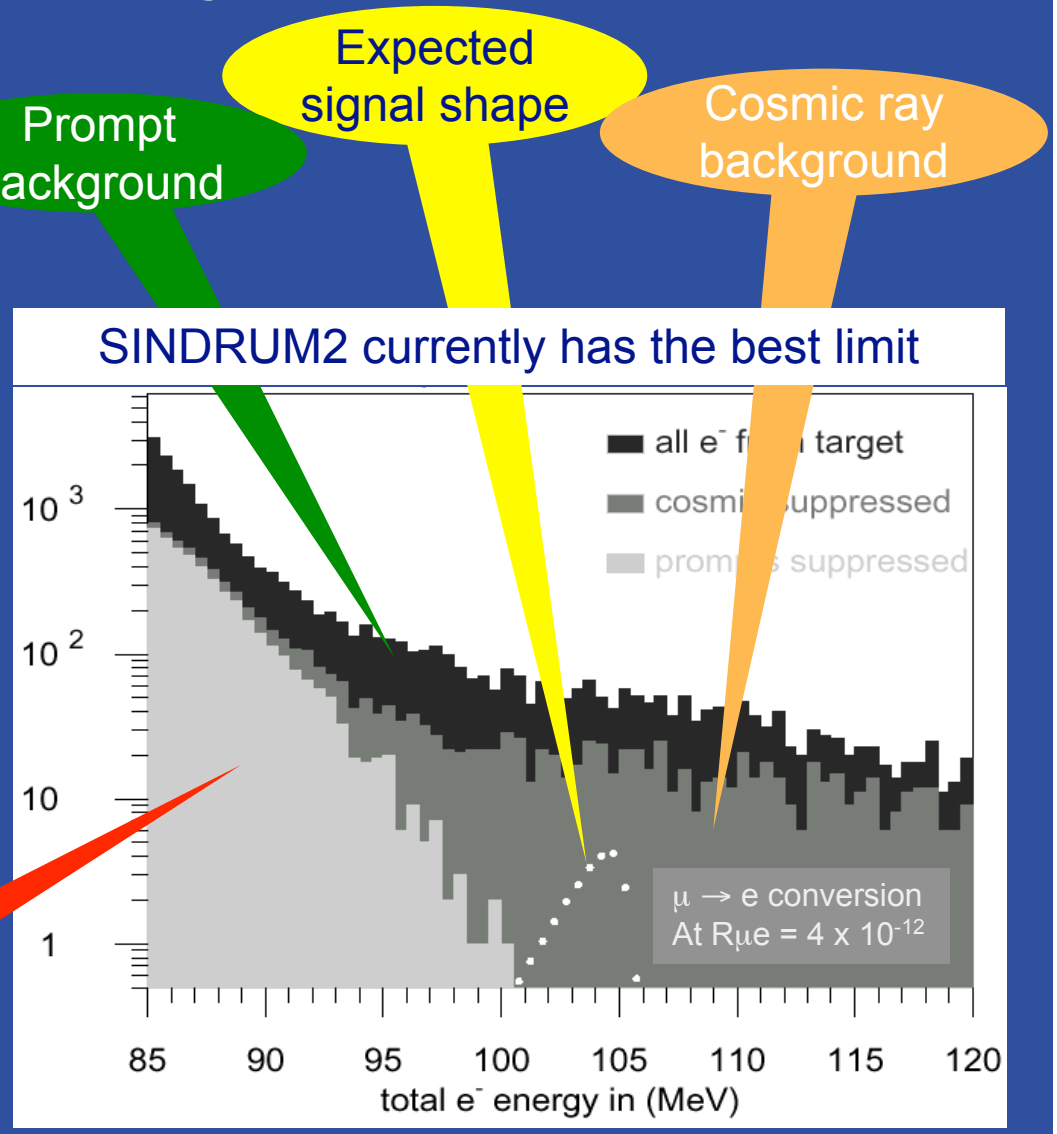

Potential Sources of Background

Largest Backgrounds

- Muon Decay in Orbit
  - $E_{max} = E_{conversion}$ when neutrinos have zero energy
  - $dN/dE_e \propto (E_{max} - E_e)^5$
  - Sets the scale for energy resolution required: ~200 keV
- Radiative Pion Capture - $\pi^- + A \rightarrow \gamma + X$
  - Branching fraction ~ 1.2% for E_γ > 105 MeV/c^2
  - Limits allowed pion contamination in beam during detection time - Extinction.

Background	Evts (2×10^{-17})
μ Decay in Orbit (DIO) Tail	0.225
μ Decay in flight w/ scatter	0.036
Beam Electrons	0.036
Cosmic Ray	0.016
μ Decay in flight (no scatter)	< 0.027
Anti-proton	0.006
Radiative μ capture	<0.002
Radiative π capture	0.072
π Decay in flight	<0.001
Pat. Recognition Errors	<0.002
Total	0.415

Mu2e Detector

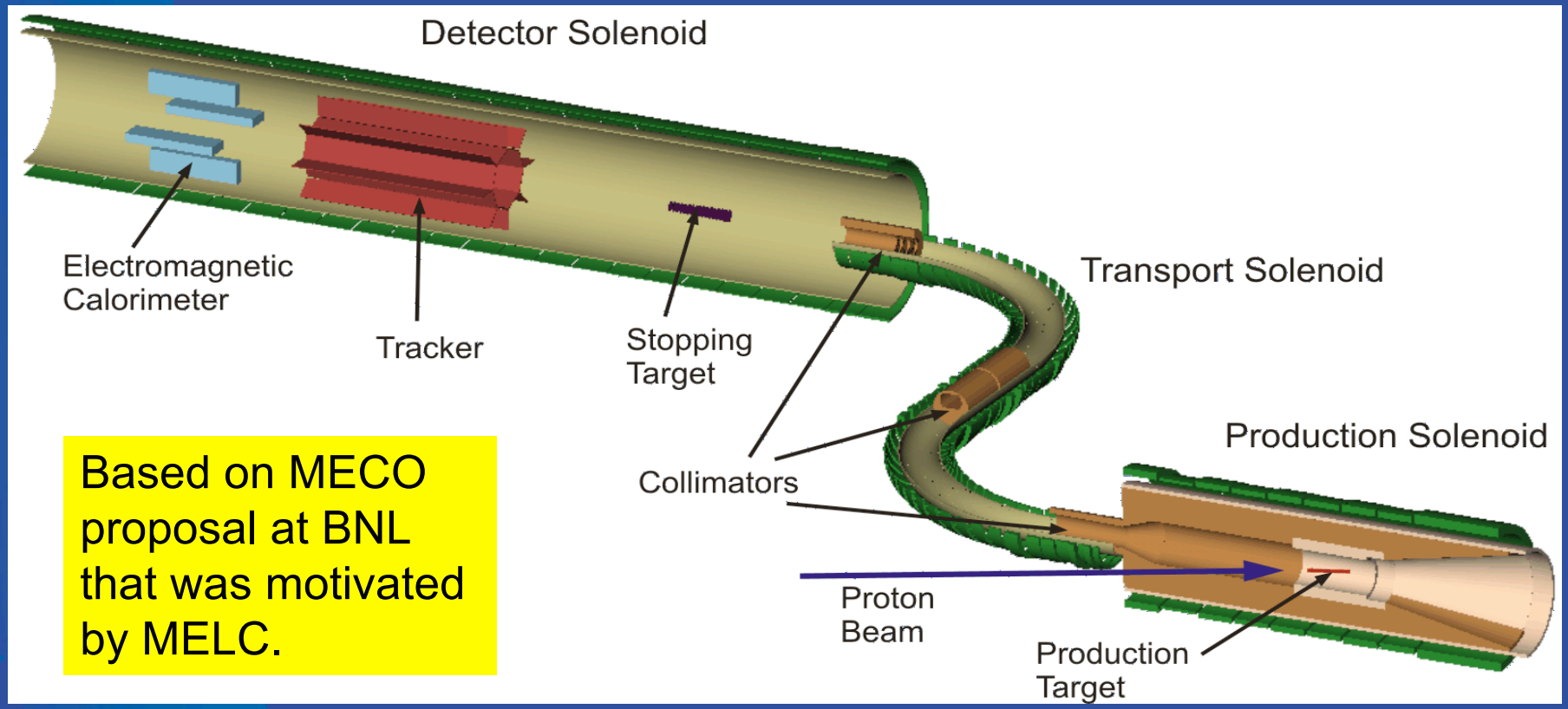

Based on MECO proposal at BNL that was motivated by MELC.

Production Solenoid

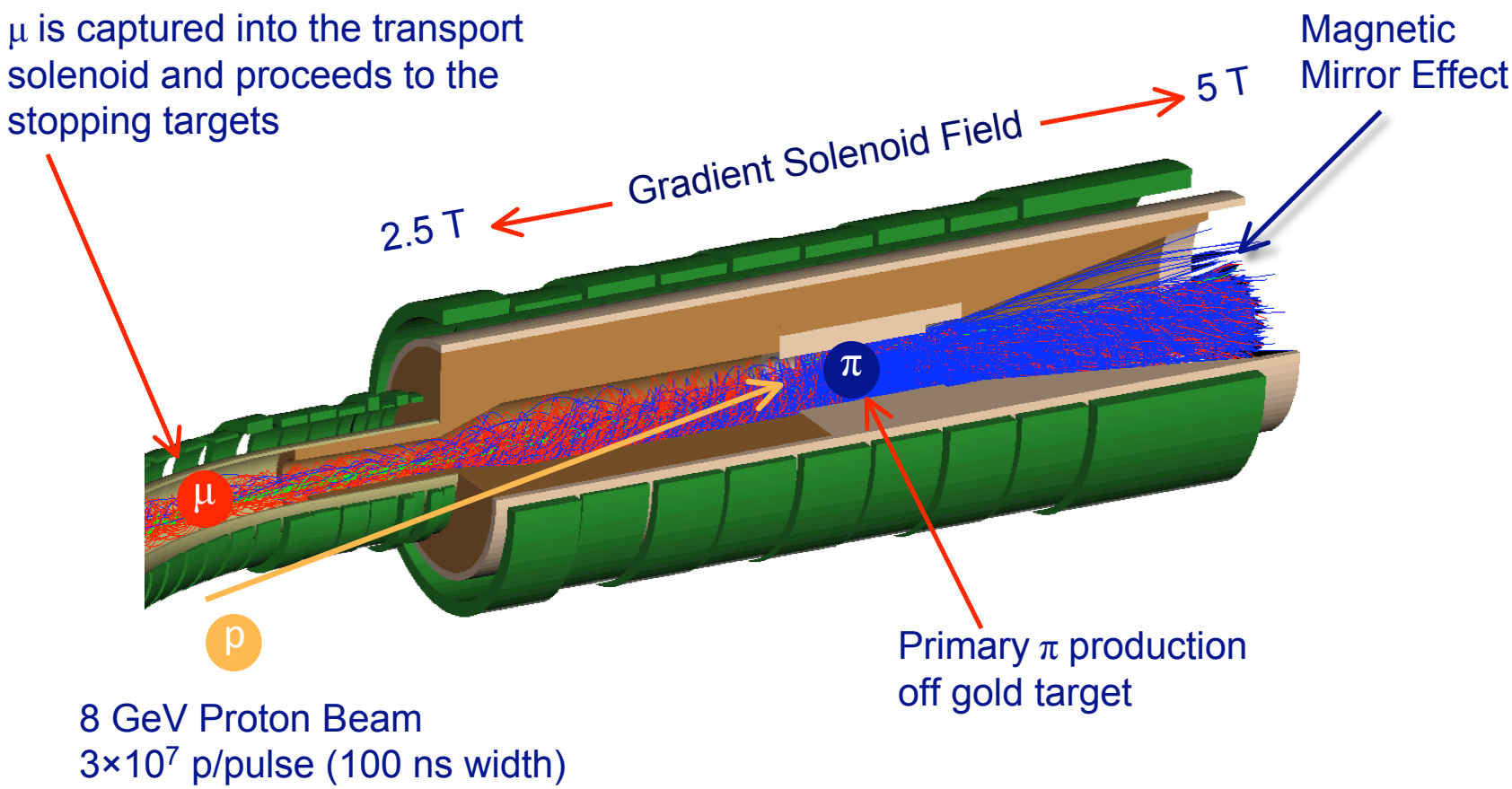

Transport Solenoid

- Designed to sign select the sign of the muon beam
  - Collimator blocks the positives after the first bend
  - Negatives are brought back on axis by the second bend

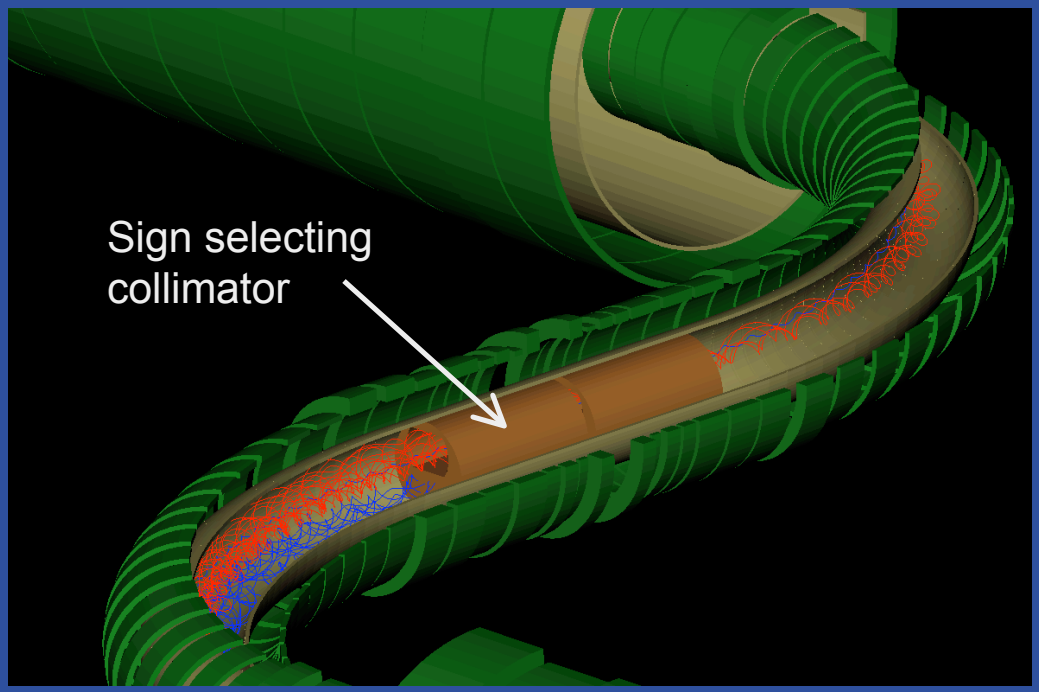

Detector Solenoid

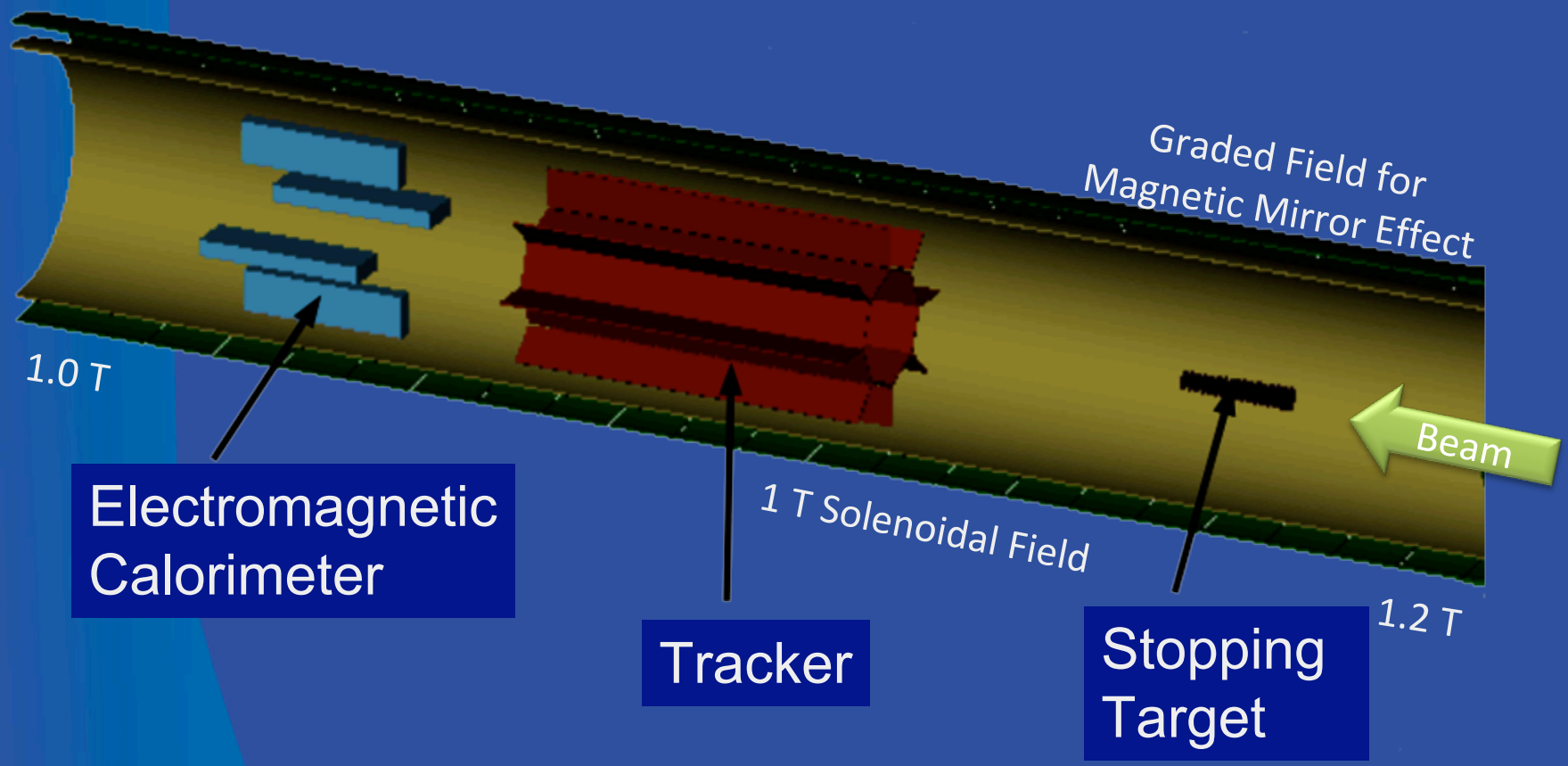

- The detector is specifically design to look for the helical trajectories of 105 MeV electrons
- Each component is optimized to resolve signal from the *Decay in Orbit* Backgrounds

Accelerator Modifications

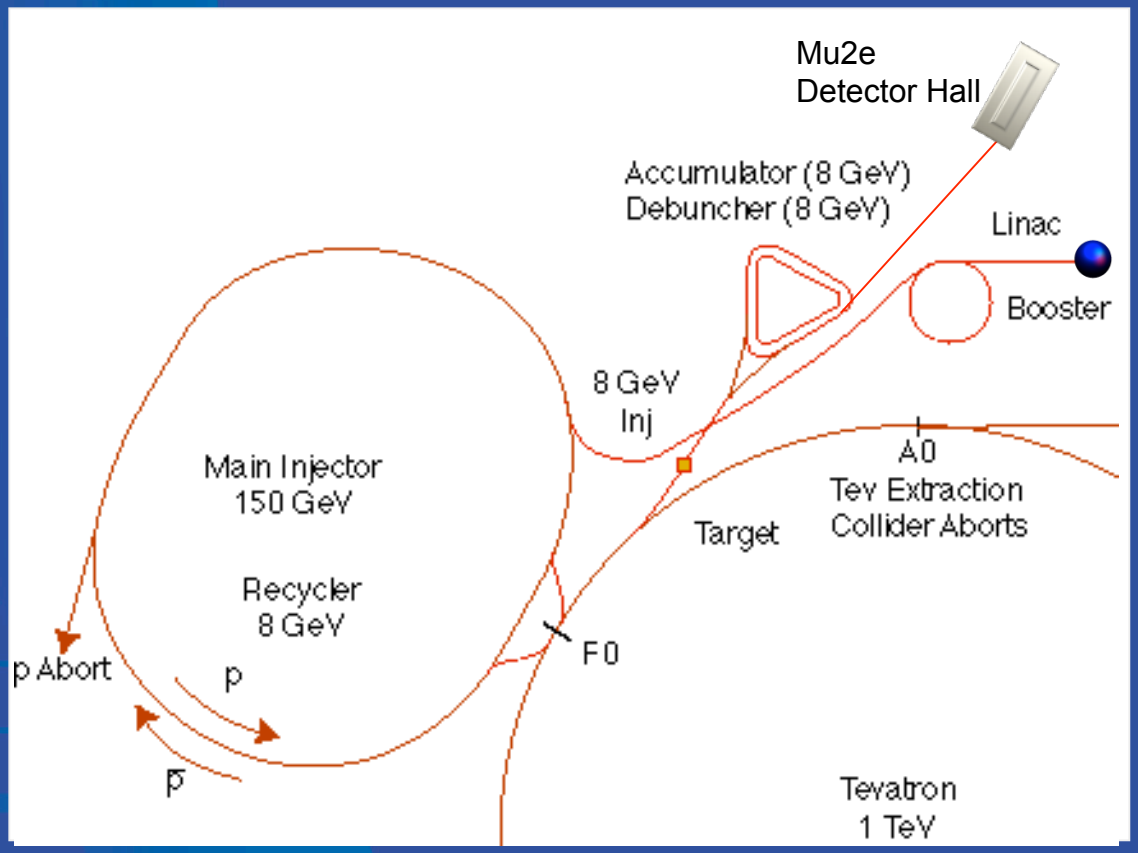

- Excess Booster cycles are available when MI is ramping.
- Use pbar rings to bunch beam and slow spill to Mu2e.
- *No Impact on NOvA*

Results in:

6 batches x 4×10^{12} /1.33 s x 2×10^{7} s/yr

= 3.6×10^{20} protons/yr

Beam Structure and Backgrounds

- μ^- are accompanied by flux of e^- and $\pi^- \Rightarrow$ Prompt backgrounds.
- Radiative Pion Capture is the most dangerous potential background.
  - Controlled through extinction and delayed live window.
  - Lifetime of muonic Al is 864 ns.

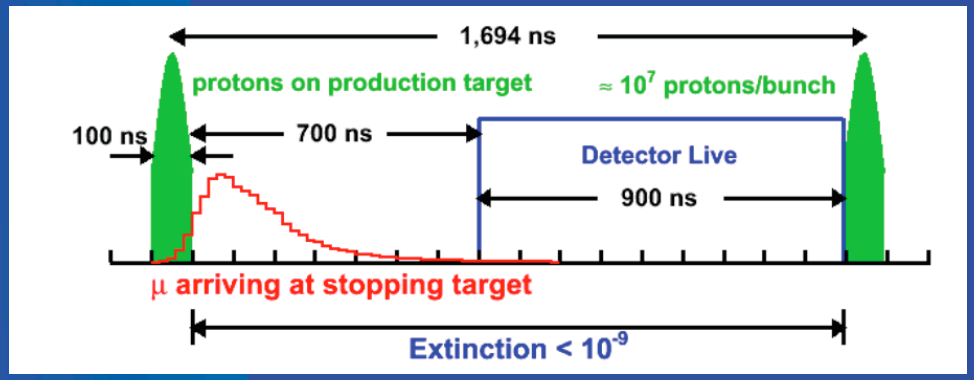

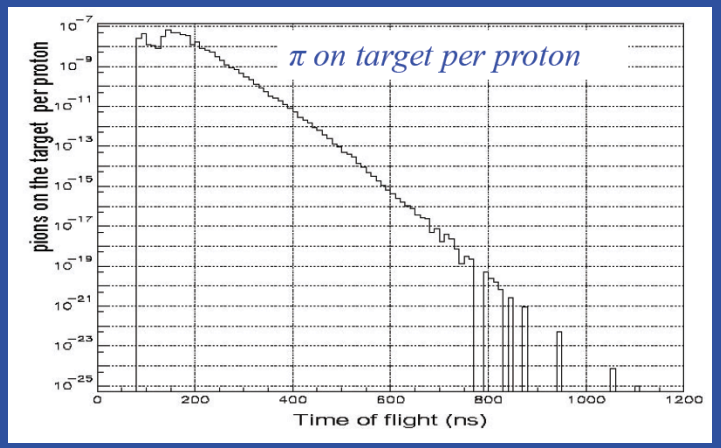

Fermilab

Mu2e Collaboration

17 institutions from
3 countries.
More institutions applying.

Boston University
J.Miller, R.Carey, K.Lynch, B. L.Roberts

Brookhaven National Laboratory
P.Yamin, W.Marciano, Y.Semertzidis

University of California, Berkeley
Y.Kolomensky

University of Calivornia, Irvine
W.Molzon

City University of New York
J.Popp

Fermi National Accelerator Laboratory
C.Ankenbrandt, R.Bernstein, D.Bogert, S.Brice, D.Broemmelsiek, R.Coleman, D.DeJongh, S.Geer, D.Glenzinski, D.Johnson, R.Kutschke, M.Lamm, P.Limon, M.Martens, S.Nagaitsev, D.Neuffer, M.Popovic, E.Prebys, R.Ray, V.Rusu, P.Shanahan, M.Syphers, H.White,B.Tschirhart, K.Yonehara,C.Yoshikawa

Idaho State University
K.Keeter, E.Tatar

University of Illinois, Urbana-Champaign
P.Kammel, G.Gollin, P.Debevec, D.Hertzog

Institute for Nuclear Research, Moscow, Russia
V.Lobashev

University of Massachusetts, Amherst
K.Kumar, D.Kawall

Muons, Inc.
T.Roberts, R.Abrams, M.Cummings R.Johnson, S.Kahn, S.Korenev, R.Sah

Northwestern University
A.De Gouvea

Instituto Nazionale di Fisica Nucleare Pisa, Universita Di Pisa, Pisa, Italy
L.Ristori, R.Carosi, F.Cervelli, T.Lomtadze, M.Incagli, F.Scuri, C.Vannini

Rice University
M.Corcoran

Syracuse University
P.Souder, R.Holmes

University of Virginia
E.C.Dukes, M.Bychkov, E.Frlez, R.Hirosky, A.Norman, K.Paschke, D.Pocanic

College of William and Mary
J.Kane

Mu2e Project

- The Mu2e Proposal was approved by Fermilab in November, 2008 - Stage I approval.
- Shortly before submission of the proposal, a Project Manager appointed.
- 5 Level 2 Managers in place.
  - Several L3 managers in place.
  - Trying to understand international contributions before naming other L2 Managers.
- Wrote first draft of Mission Need documentation
- Visited Germantown to walk through cost estimate with OHEP

Mu2e Project

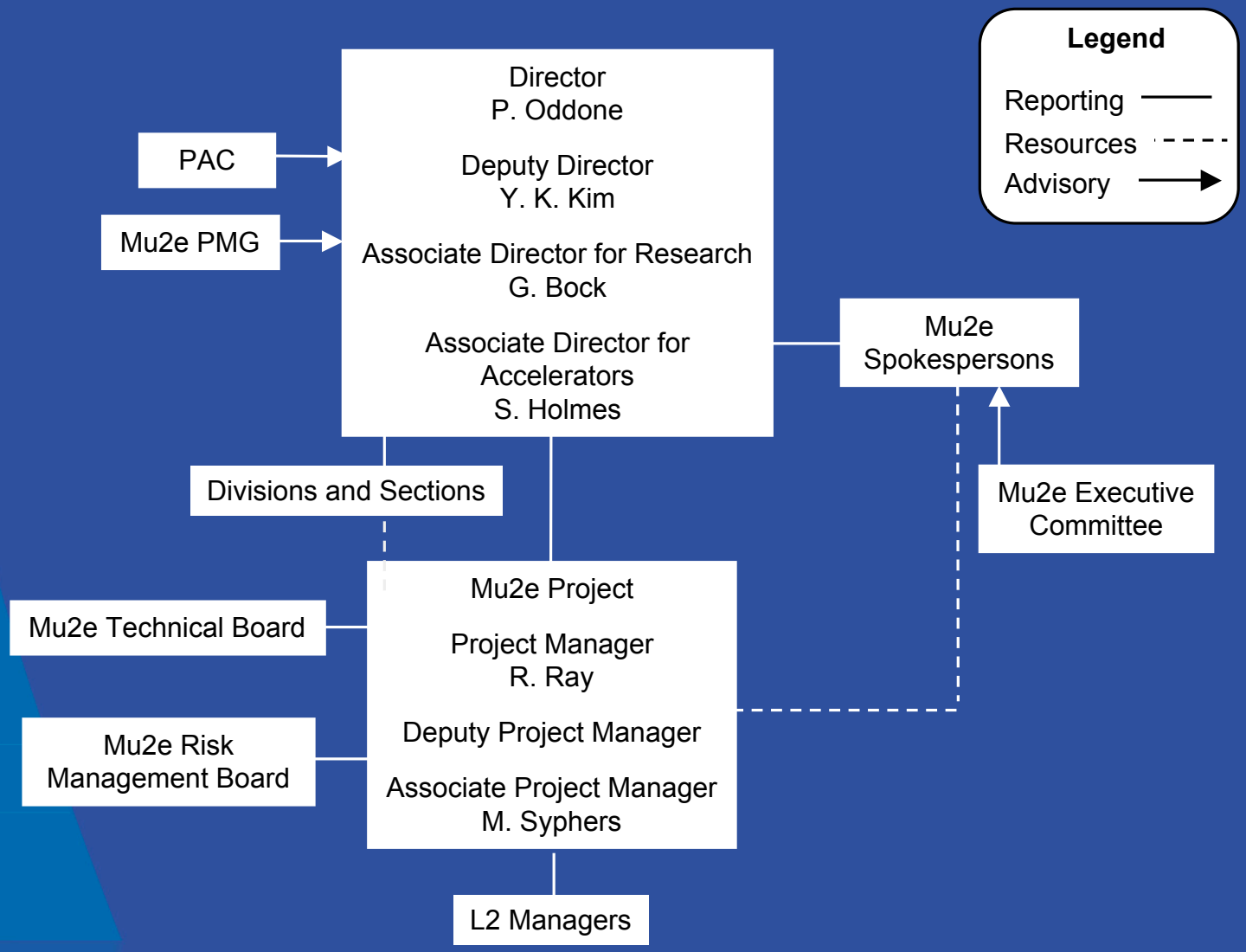

Mu2e L2 Subsystems

Accelerator	Conventional Construction	Solenoids	Muon Beamline	Tracker
M. Syphers	T. Lackowski	M. Lamm	P. Limon	Rice, Berkeley, INFN, FNAL
FNAL, CUNY	FNAL	FNAL	FNAL, BU	

Calorimeter	Cosmic Ray Veto	Trigger and DAQ	Project Management
UVa, Illinois	W&M, BNL, FNAL	Amherst, BU, FNAL	R. Ray

In addition, Berkeley, CUNY, FNAL, Illinois, INFN, Rice and Virginia are committed to simulations work.

The Solenoids are expensive. Why?

- Cost includes design, fabrication and installation of tooling, cryo plant + connections, power supplies, quench protection magnet steel…
- Lots of complexity
  - Graded fields
    - 94 wound coils, each having a different number of amp-turns with soldered lap joints at coil interfaces
  - Curved sections
  - High field uniformity requirement in detector solenoid
    - $0.998 < B < 1.002$ T
- Production solenoid has additional complexity.
  - 5 Tesla field at one end.
  - 109 MJ of stored energy (out of 150 MJ total).
  - Nuclear heat load of ~190 W at 4.5 K.
    - Requires massive, expensive heat shield and mechanical support.
    - Pool boiling required to adequately cool.

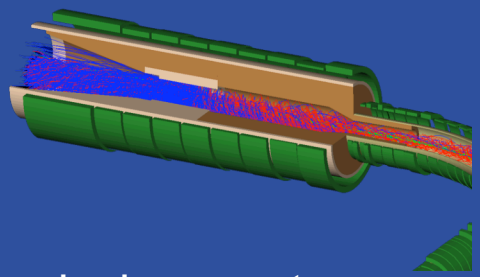

Mu2e Solenoid Studies

Looking for ways to make the solenoids cheaper & faster.

- Considering option of making Production Solenoid shorter to reduce nuclear heat load
  - Reduces risk and cost
  - Replace pool boiling with conduction cooling
    - Eliminate 6000 L of Helium
    - Simplify piping/relief system
    - Simplifies interface with Transport Solenoid
  - But, reduces number of stopped muons by 15 - 30%.
- Looking at reduction in number of coils
  - 9 coils to 2 or 3 in Production solenoid
  - Possible to reduce coils and simplify design in Transport Solenoid?
- Looking at possibility of relaxing specifications
  - May be possible to relax field uniformity spec in Detector Solenoid
    - Current spec 0.002 T.

2-3 Coil Design

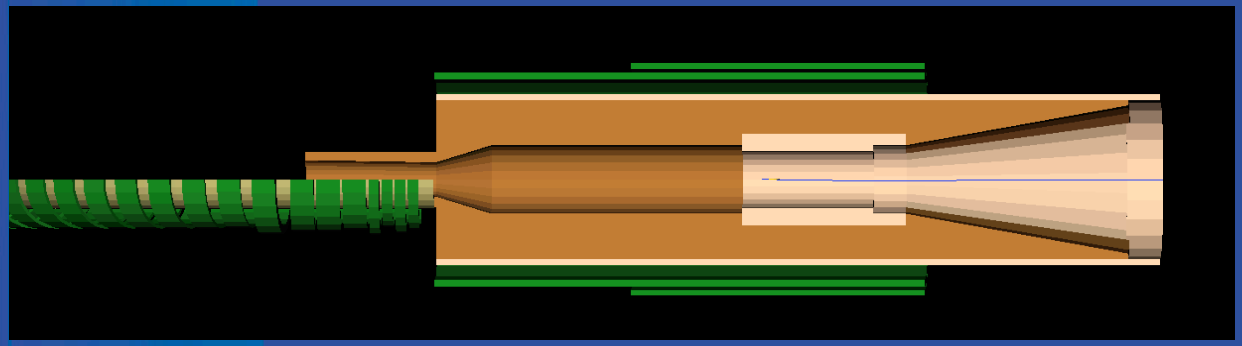

2-Coil Short

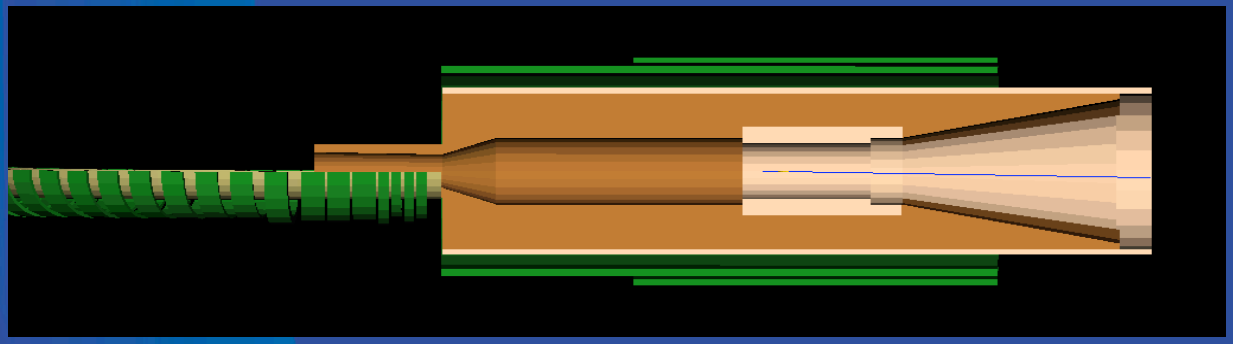

2-Coil Long

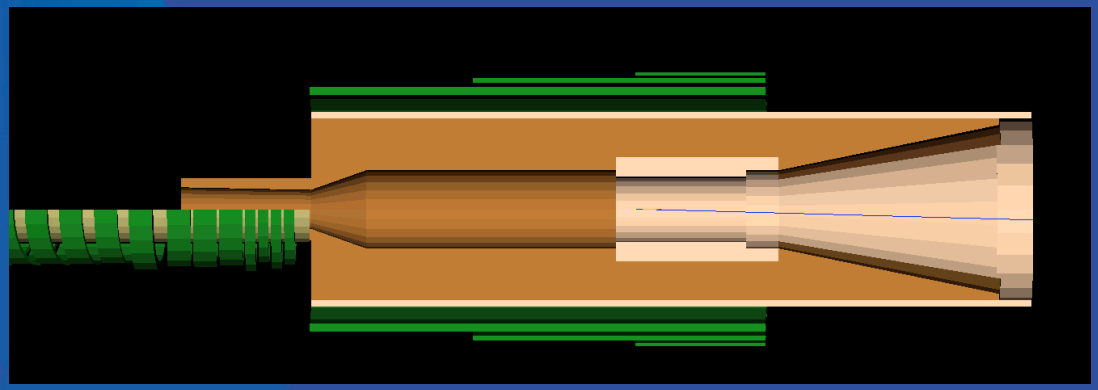

3-Coil Short

Straw Tracker

Most of the DIO rate passes through the detector unnoticed.

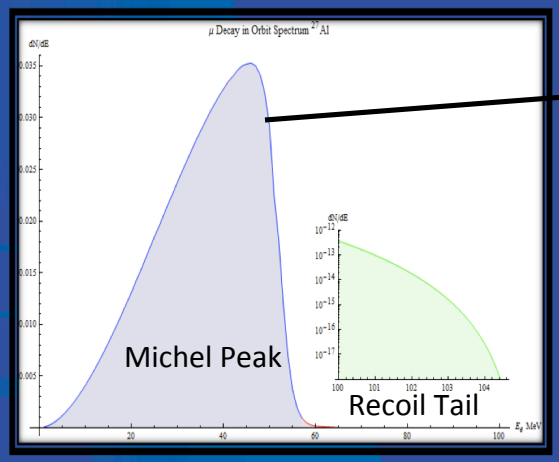

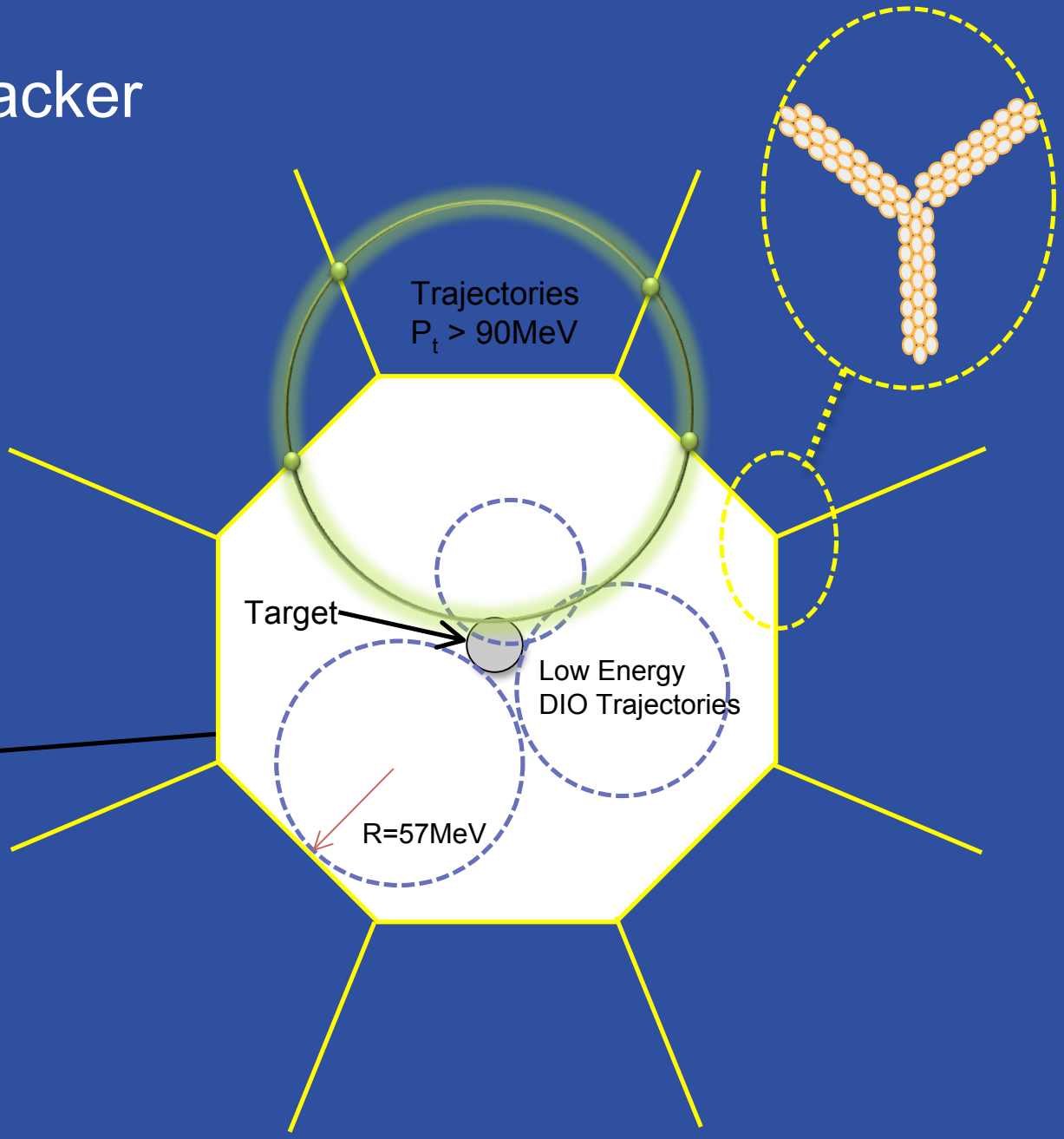

Fermilab

Tracker Alternatives

Several options being evaluated, each with different strengths and weaknesses.

- Straw tubes
  - Straws transverse to solenoid axis
  - Longitudinal straws with pad readout
- Drift chamber
  - Much more robust reconstruction, but massive rate of Michel electrons passing through center may be a problem.

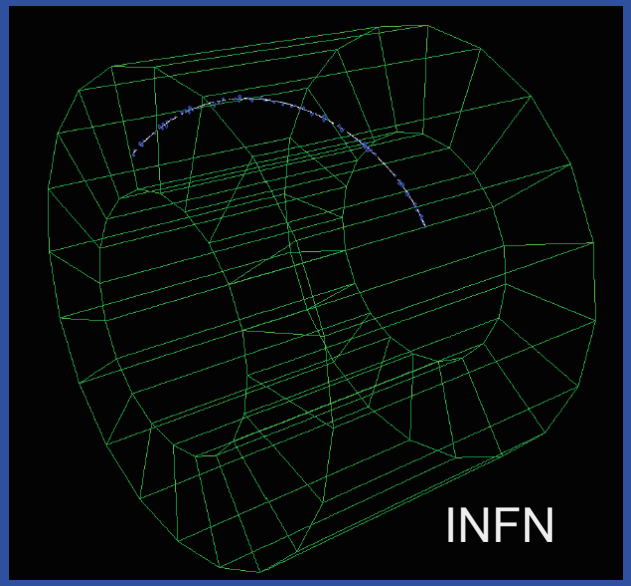

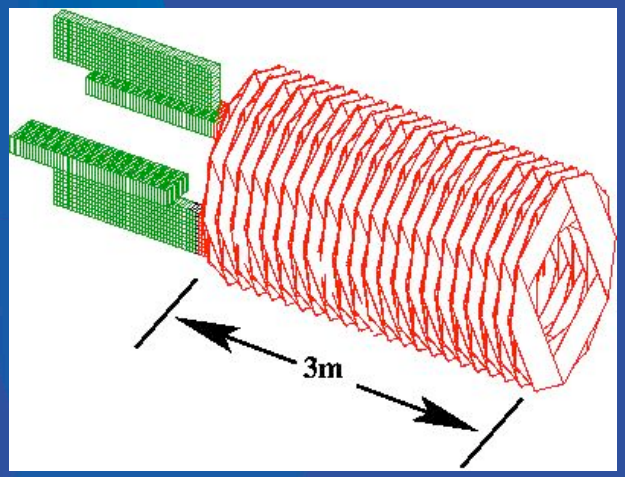

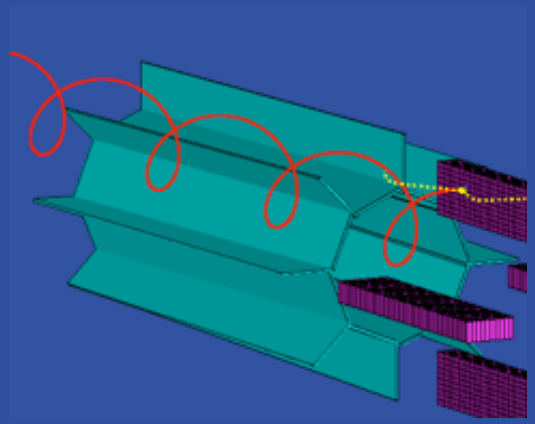

Calorimeter

- Finding a signal of a few parts in 10^{17} requires multiple, redundant measurements.
- High rates of protons, neutrons and photons from the muon stopping target can lead to mis-reconstructed events in the tracker.
- The calorimeter supplies redundant energy, position, and timing information on tracks that have been reconstructed by the tracker.

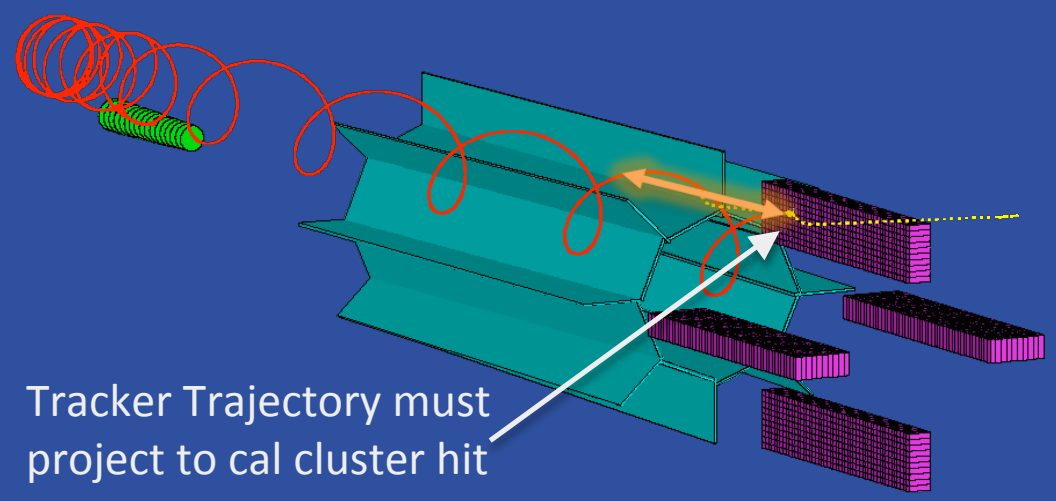

R&D

- Critical R&D outlined in January White Paper to DOE
- Preliminary budget, schedule and resource plan developed for R&D.
- Cost range for CD-0 includes ~ $5M for R&D, ~ $6M for conceptual design and ~ $32M for final design (PED funds).
  - More work needed on details.
  - Resources identified but not all are in place.

R&D - cont.

Tasks underway
Highlighted in orange

- Solenoids
  - Compile a complete set of existing drawings and documents into an updated CDR based on MECO design.
  - Value engineering, changes based on advancements in technology or better understanding of requirements.
  - Validate all of the magnetic, electrical, quench and mechanical calculations.
  - Produce Mu2e CDR for solenoids.

R&D

- Accelerator and beamline
  - Simulation of space charge effects
  - Specification of RF systems
  - Simulations of complete scenario
  - Instability assessment
  - Beamline designs for transfers between machines
  - 3-D simulation of motion with space charge
- Tracker
  - Which straws?
    - spiral, seamless, polyimide, PEEK
  - Fabricate vane to study mechanical stability, mounting, and assembly
  - Full-size prototype
    - crosstalk, noise, high-rate operation of pad readout
  - Simulations of drift chamber alternative
  - Electronics prototyping to begin in the Fall at Berkeley.

R&D - Cont

- Cosmic Ray Veto
  - Prototype counters being tested at CDF this summer
    - Light levels
    - Response to neutrons
    - Simulations of physics requirements
- AC Dipole R&D for Extinction
  - Build a short, 0.5 m long model to investigate magnet design
  - US/Japan funds being used to jointly study issues
    - Properties of ferrite materials and conductors at high frequency and power.
    - Fabrication, performance, and power supply studies
- Beam test at PSI this summer to measure rates and spectra from muon capture on thin target.

Cost in FY09 $

- Base cost for detector and solenoids from MECO but with Mu2e contingencies
- Accelerator costs from AD
- Civil costs from FESS

	M&S (k$)	Labor (k$)	Base Cost FY05 k$	Base Cost FY09 k$	Contingency %	Contingency (k$)	Total FY09 k$
Production Target and Shield	$2,490	$219	$2,709	$3,856	50%	$1,928	**$5,800**
Muon Beamline	$1,209	$1,265	$2,474	$2,839	50%	$1,419	**$4,300**
Straw Tracker	$2,280	$998	$3,278	$3,762	50%	$1,881	**$5,700**
Calorimeter	$3,466	$1,177	$4,643	$5,328	50%	$2,664	**$8,000**
Cosmic ray veto	$1,203	$406	$1,609	$1,846	50%	$923	**$2,800**
Trigger and DAQ	$884	$584	$1,468	$1,685	50%	$842	**$2,500**
Solenoids	$37,061	$7,618	$44,679	$51,270	50%	$25,635	**$76,900**
Accelerator and Beamline	$5,525	$5,396		$10,921	100%	$10,921	**$21,800**
Civil Construction	$12,632	$6,529		$19,161	40%	$7,664	**$26,800**
R&D	$1,950	$2,775		$4,725			**$4,700**
Project Office	$1,000	$7,431		$8,431	50%	$4,216	**$12,600**
Total	**$69,700**	**$34,398**		**$113,824**	**51%**	**$58,094**	**$171,900**

Cost in AY$

$200M Total project cost with a 51% overall contingency

	2,009	2,010	2,011	2,012	2,013	2,014	2,015	2,016	Total
R&D	$600	$4,200							**$4,800**
Conceptual Design	$1,800	$4,200							**$6,000**
PED			$14,700	$17,300					**$32,000**
Construction					$62,500	$47,500	$33,000	$14,200	**$157,200**
Total AY k$	**$2,400**	**$8,400**	**$14,700**	**$17,300**	**$62,500**	**$47,500**	**$33,000**	**$14,200**	**$200,000**

FTE Base Estimate - Fermilab and University Contributions

- Technically limited schedule with some funding constraints. Very preliminary, but we add 50 - 100% contingency to these numbers.
- Physicists included in FTE count but not costed.

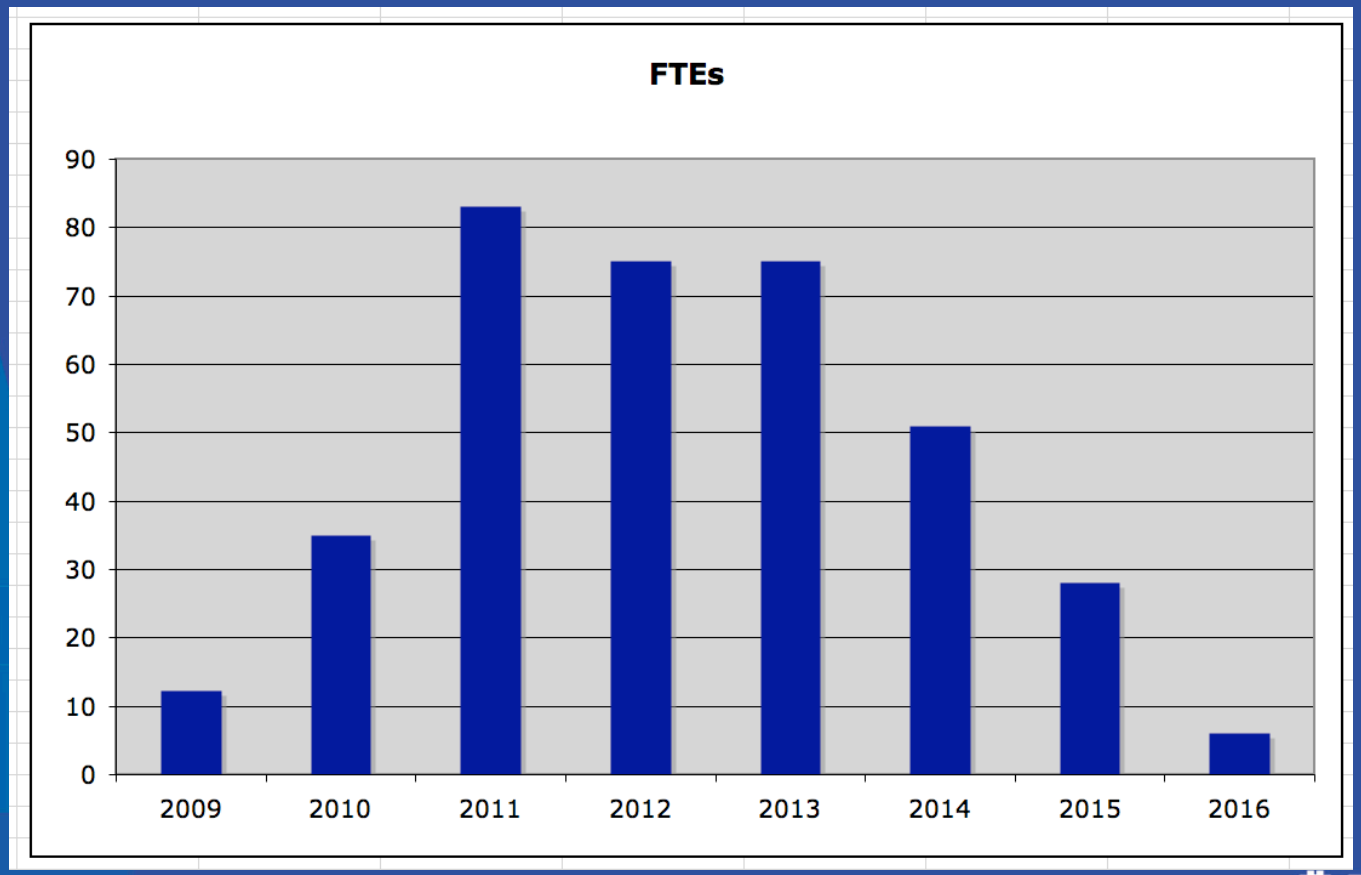

Schedule

We have an outline of a funding plan from DOE

- PED funds in 2011-2012
- Construction funds in 2013

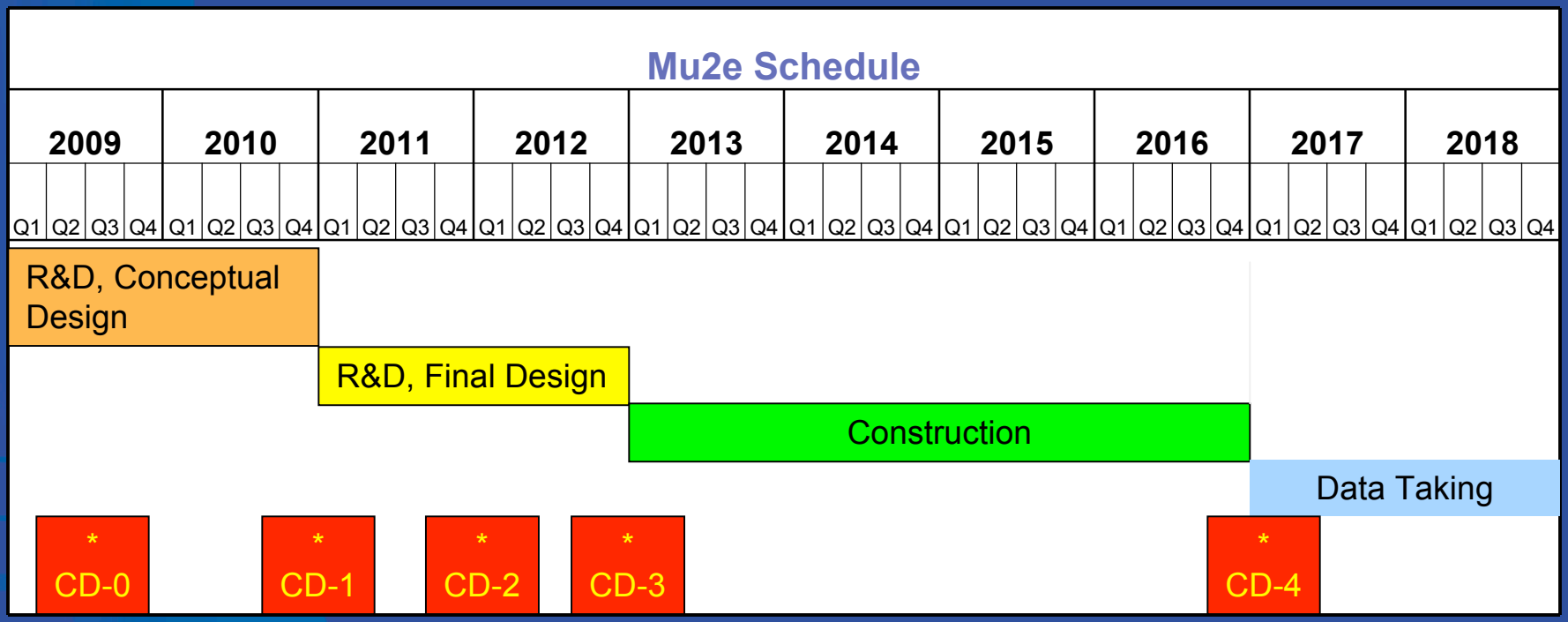

Muon Conversion and Project X

A muon conversion experiment adds significantly to the already strong case for Project X.

- We have to do Mu2e first to learn how to take advantage of the rates at Project X.
- The results from Mu2e will determine what an experiment at Project X looks like:
  - Observation of muon conversion by Mu2e
    - Project X experiment focuses on repeating the measurement with a variety of stopping targets to map out the source of the new physics. Requires a different measurement strategy because of the shorter muon lifetime in different target materials.
  - No observation
    - Project X experiment extends sensitivity of Mu2e. Take as much rate as possible.

Muon Conversion and Project X - cont.

- P5 recognized that Mu2e could be a stepping stone in a world-leading high-intensity muon program that takes advantage of Project X and leads ultimately to a muon collider.
  - "Such an experiment could be the first step in a world-leading muon-decay program eventually driven by a next-generation high-intensity proton source."
- Potential upgrades for Mu2e at Project X include helical cooling channels to capture and stop more muons.
  - Relevant for muon collider

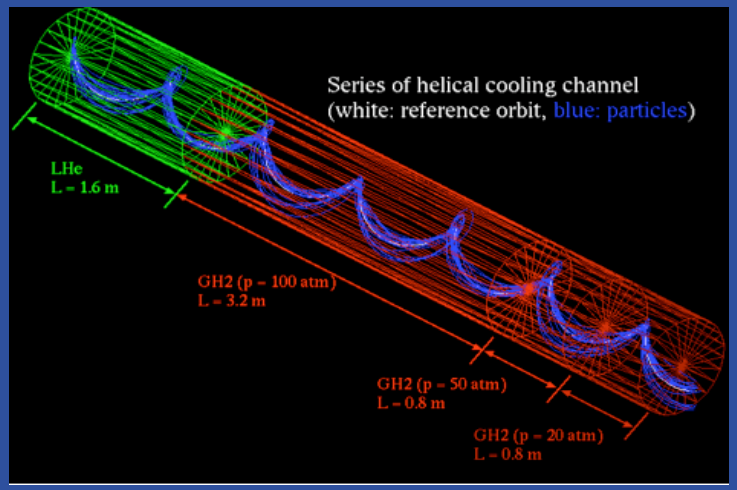

Summary

- Mu2e was strongly recommended by P5 based on its physics reach and potential impact. The science is first-rate.
- Mu2e is a technically challenging experiment that requires a complex, state-of-the art detector.
- We have R&D funding and are currently working on many fronts, but more resources are needed.
- The estimated Total Project Cost of Mu2e is $200M that includes a 50% contingency.
- Based on an outline of a funding plan, Mu2e could be ready to take data in 2017.
- An upgraded muon conversion experiment adds significantly to the already strong case for Project X.
  - The details of a Project X experiment depend on what we learn from Mu2e.