Search for the EDM of Ra-225

Matthew R. Dietrich

Physics Division

Argonne National Lab

2012 Project X Physics Study

June 16, 2012

Supported by

Department of Energy, Office of Nuclear Physics

EDM Sectors

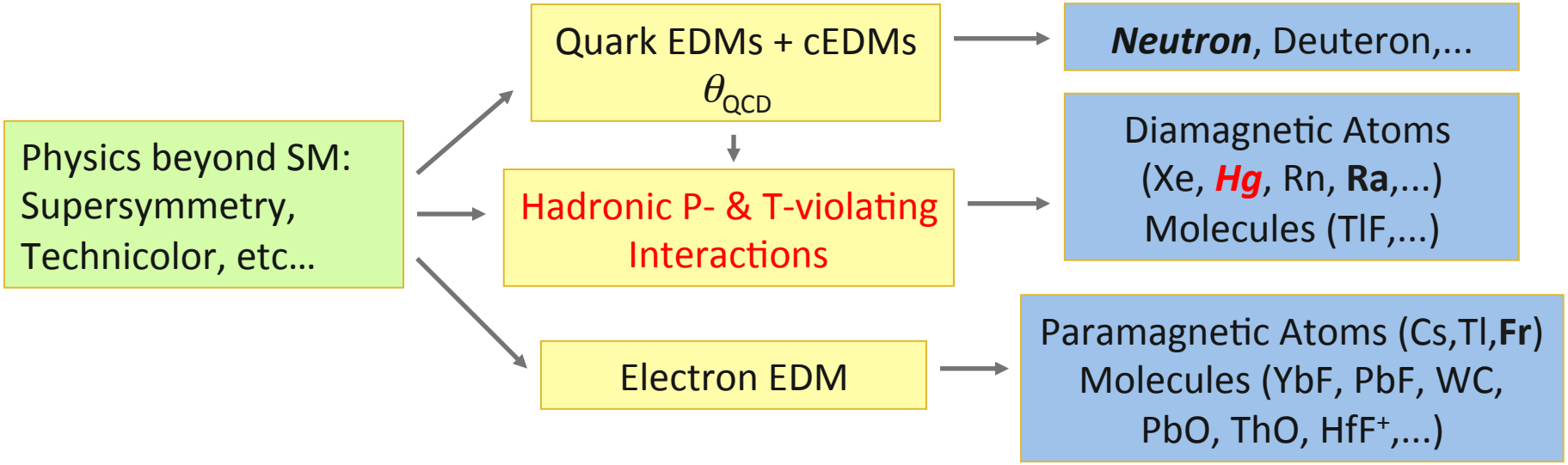

Sector	Exp Limit (e-cm)	Method	Standard Model
Electron	1×10^{-27}	YbF molecules in a beam	10^{-38}
Neutron	3×10^{-26}	UCN in a bottle	10^{-31}
^{199}Hg atom	3×10^{-29}	Hg atoms in a cell	10^{-33}

Schiff Moments and EDMs

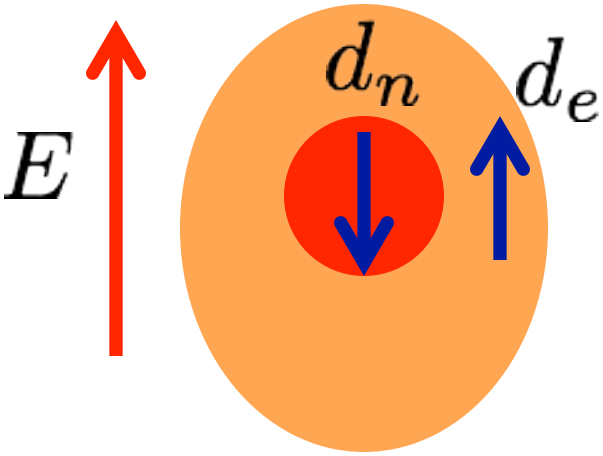

Schiff Moment

$$\vec{S} = \frac{\langle e r^2 \vec{r} \rangle}{10} - \frac{\langle r^2 \rangle \langle e \vec{r} \rangle}{6}$$

Schiff Theorem (1963):

* Any permanent dipole moment of the nucleus is perfectly shielded by its electron cloud
* True for point-like nuclei, non-relativistic electrons

However, the "Schiff moment" is not shielded by this effect

* Zero for point-like, spherical nuclei
* Arises from deformations in the nucleus or its constituent nucleons
* Very large in nuclei with both a quadrupole and octupole deformation

Look for heavy nuclei with large quadrupole and octupole deformations!

Measuring the EDM

$$h\nu_{\pm} = \frac{\mu B \pm dE}{S}$$

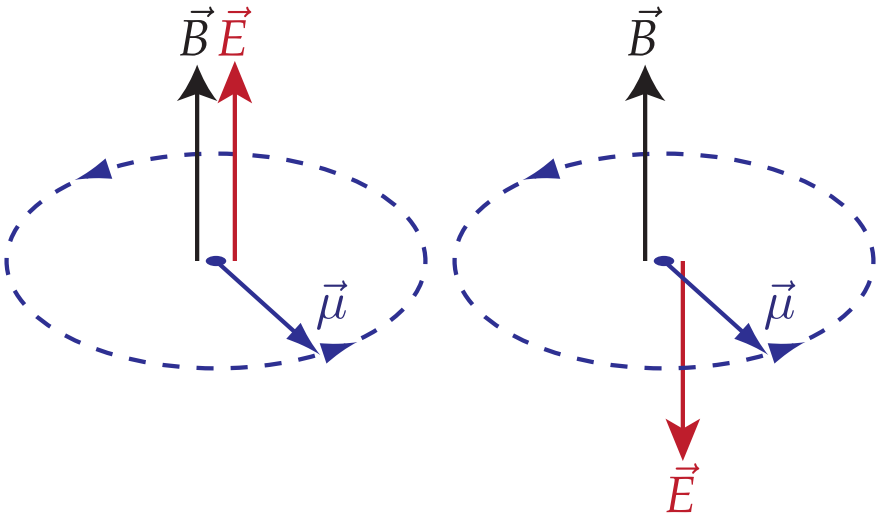

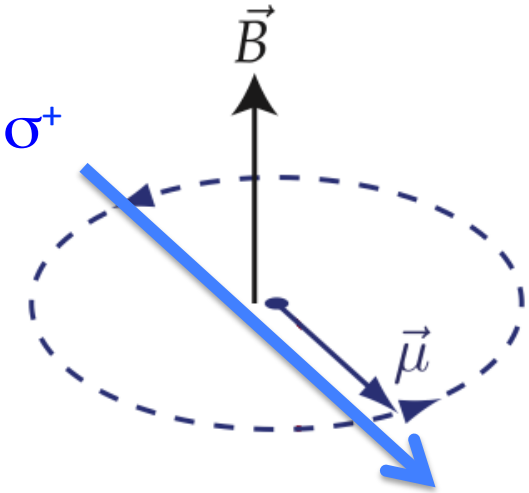

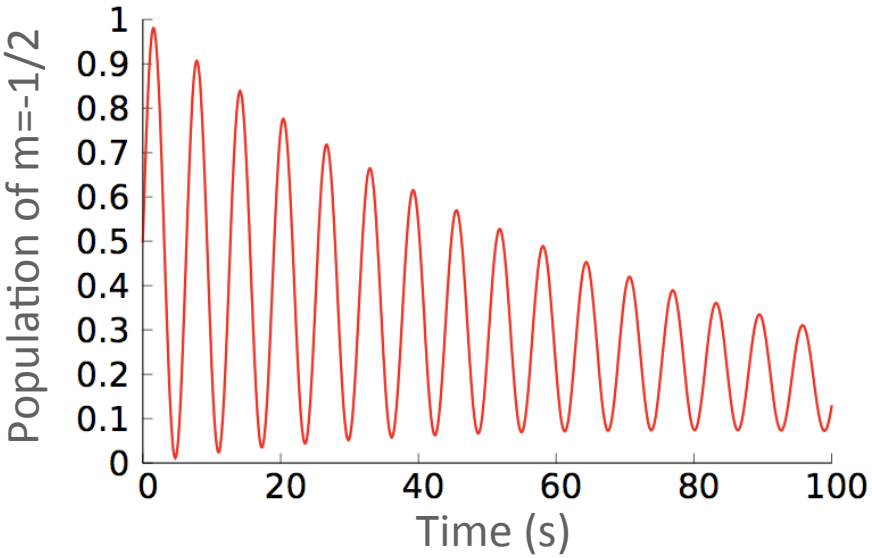

Paramagnetic and Diamagnetic Atoms

Systematic	Paramagnetic (Electron EDM)	Diamagnetic (Nuclear EDM)
Electron Spin	J=1/2,1…	J=0
Nuclear Spin	I=0,1/2,1…	I=1/2,1…
Nuclear Mass	Large	Large
Nuclear Deformation	Small	Large
Examples	Fr, Cs…	Hg, Ra, Rn…

Candidate Nuclei

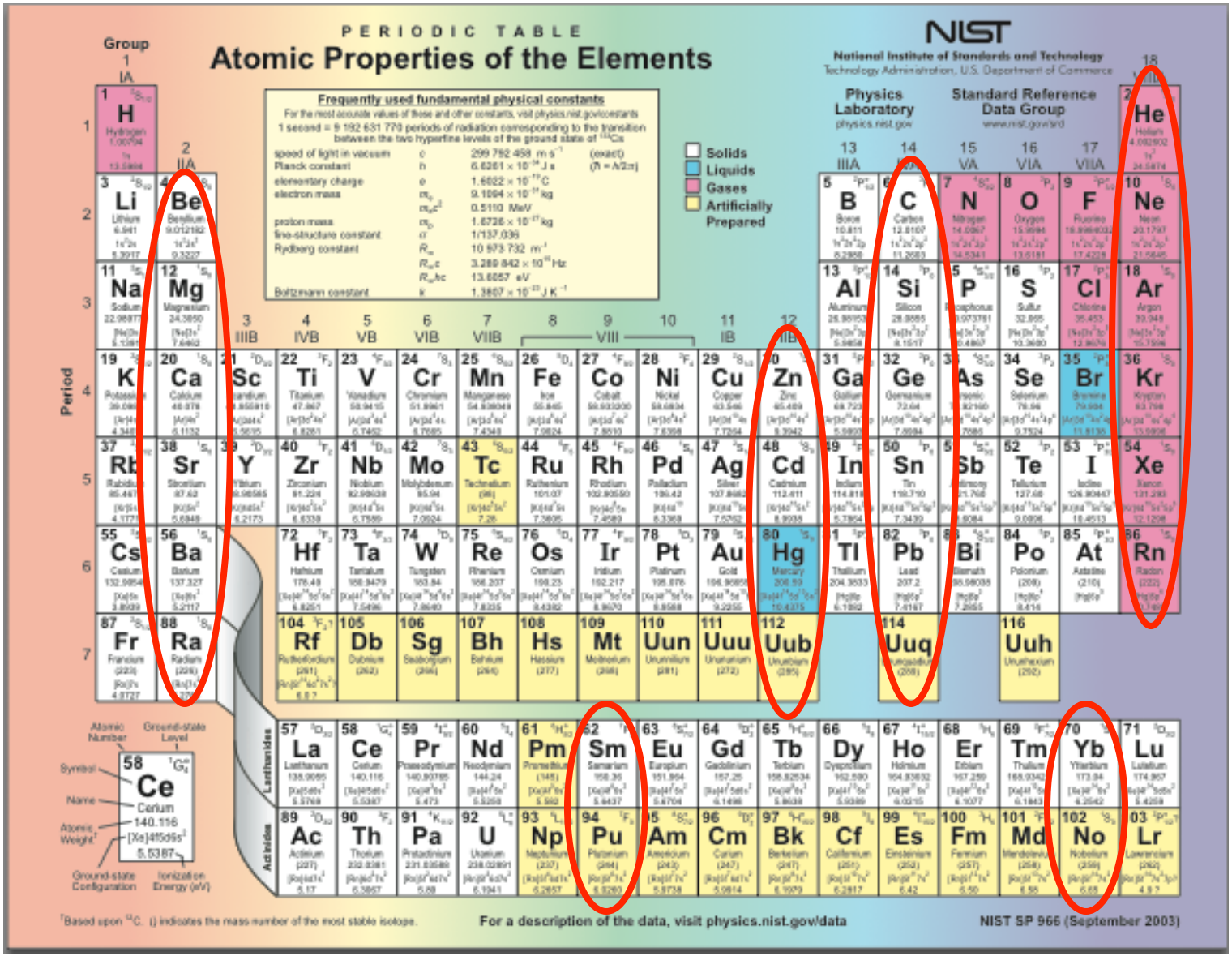

Candidate Nuclei

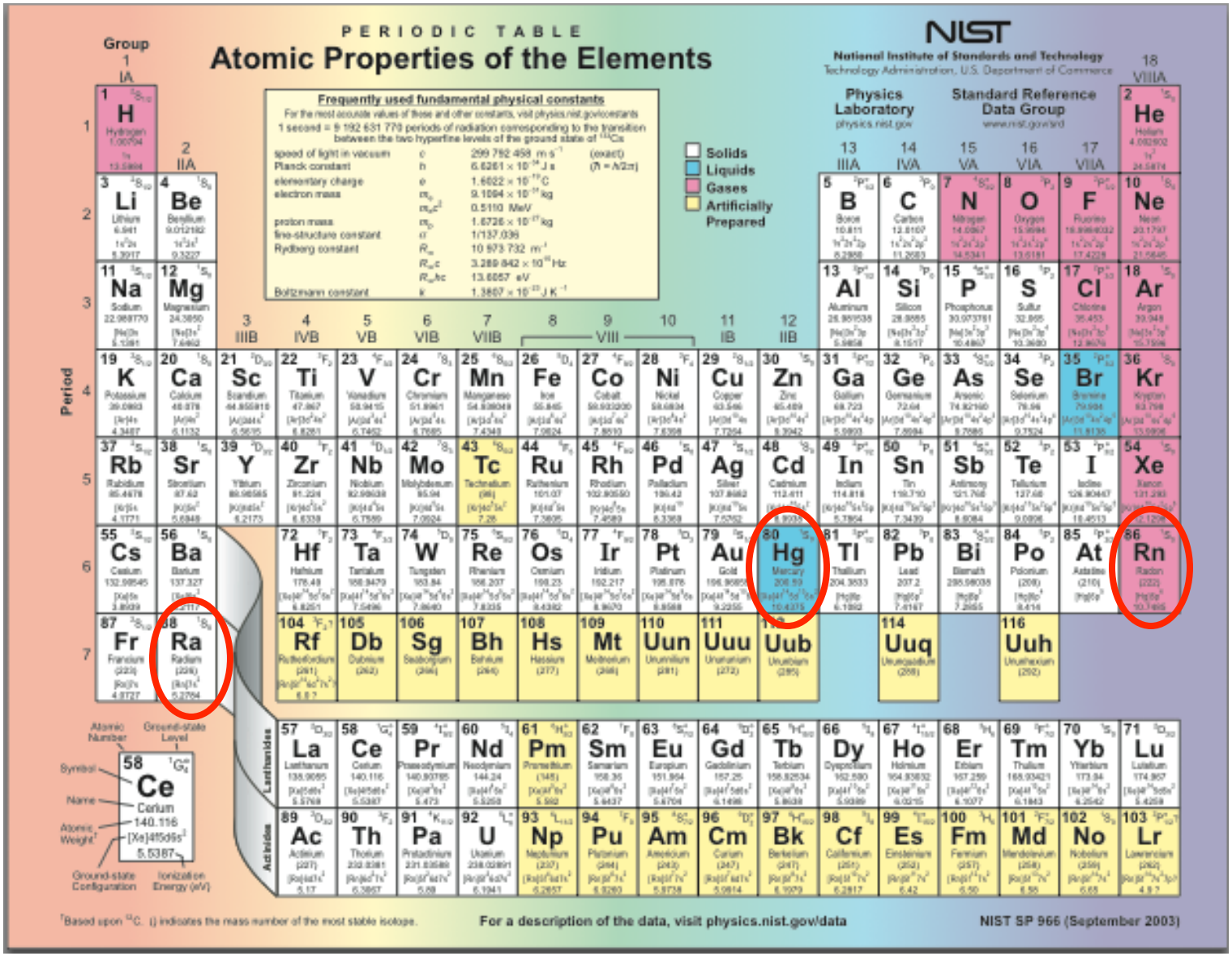

Candidate Nuclei

Best EDM limit from diamagnetic species currently comes from Mercury-199:

$|d(^{199}Hg)| < 3.1 \times 10^{-29}$ *e* cm (95% C.L.)

Griffith et al., PRL 102 101601 (2009)

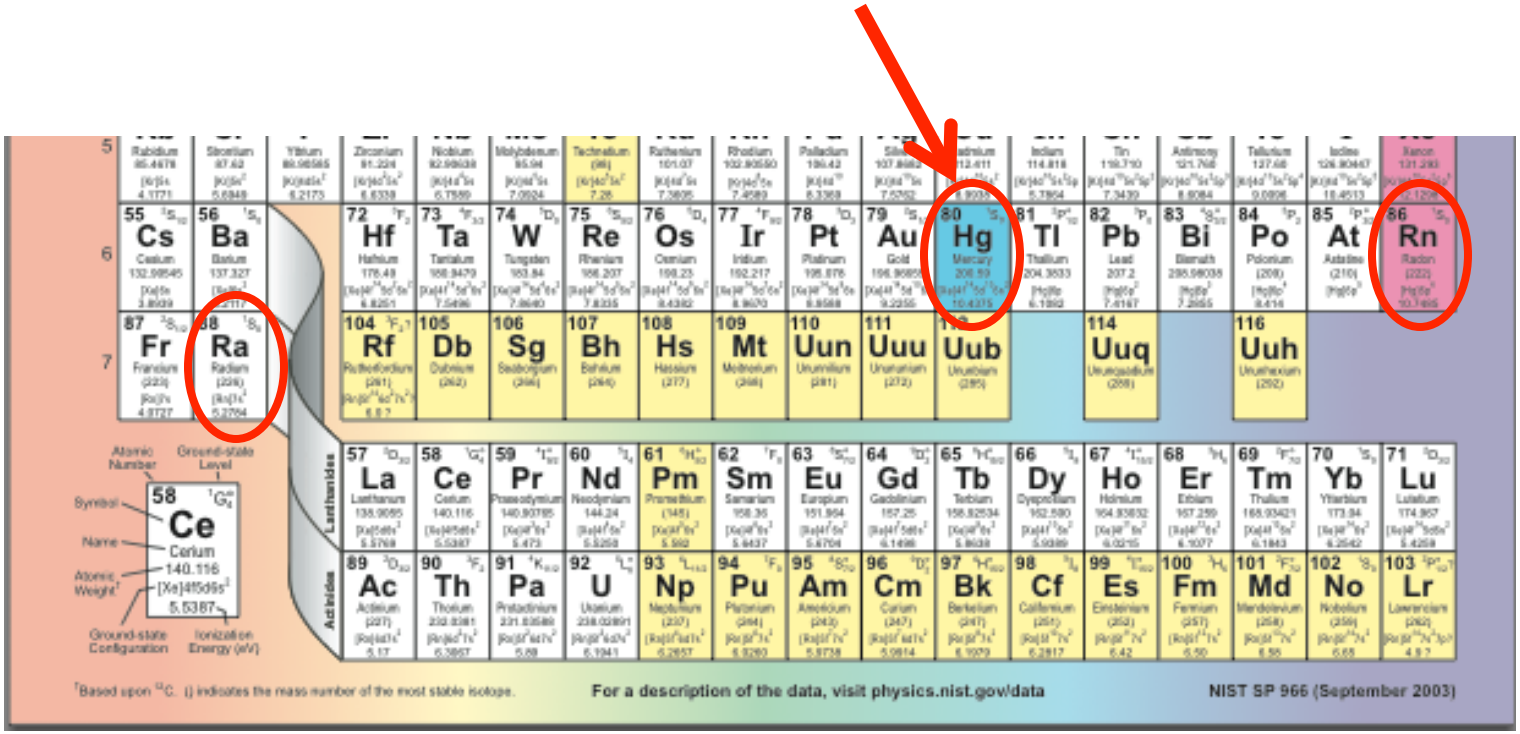

Hg-199 in Seattle, Washington

Stable, high Z, groundstate $^1S_0$, I = ½, high vapor pressure

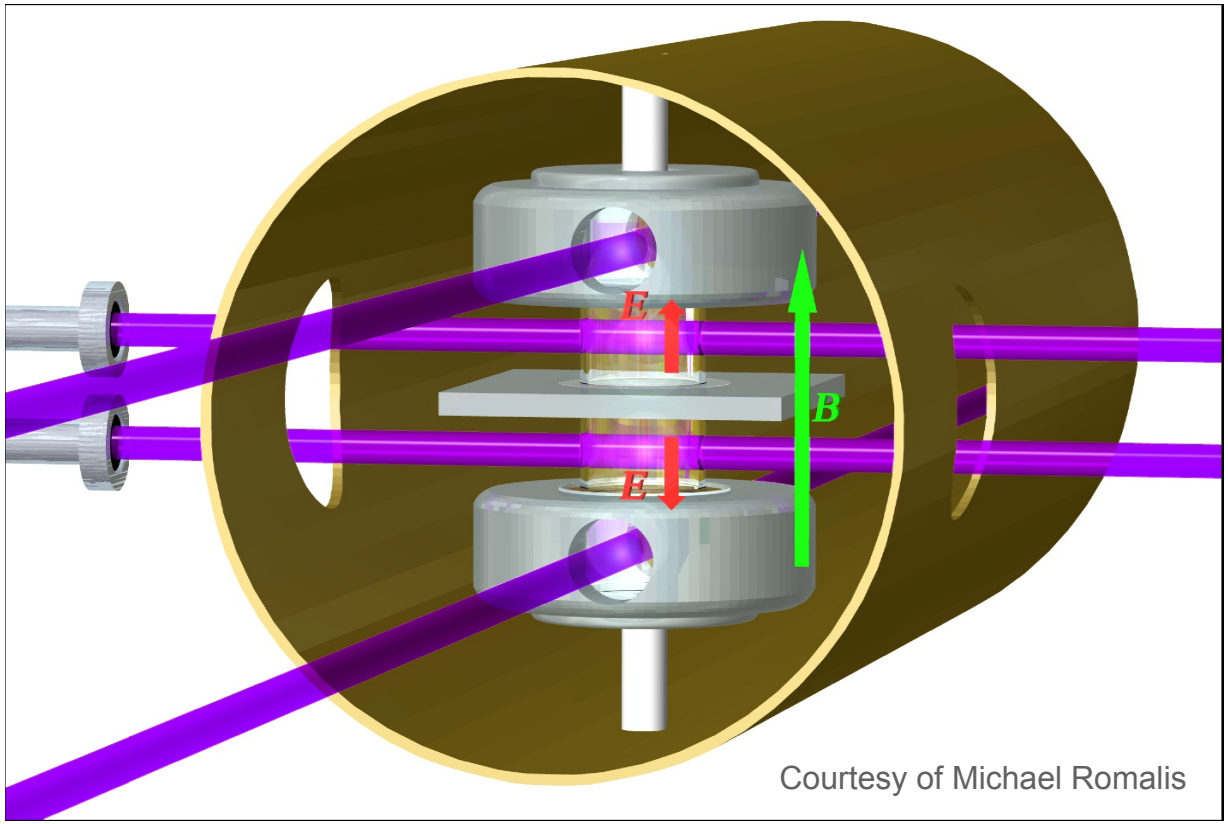

Hg-199 In Glass Cell:

* Maximum voltage limited by dielectric breakdown. 10 kV/cm
* Systematically limited by currents from leakage across glass

Hg-199 in Seattle, Washington

Stable, high Z, groundstate $^1S_0$, I = ½, high vapor pressure

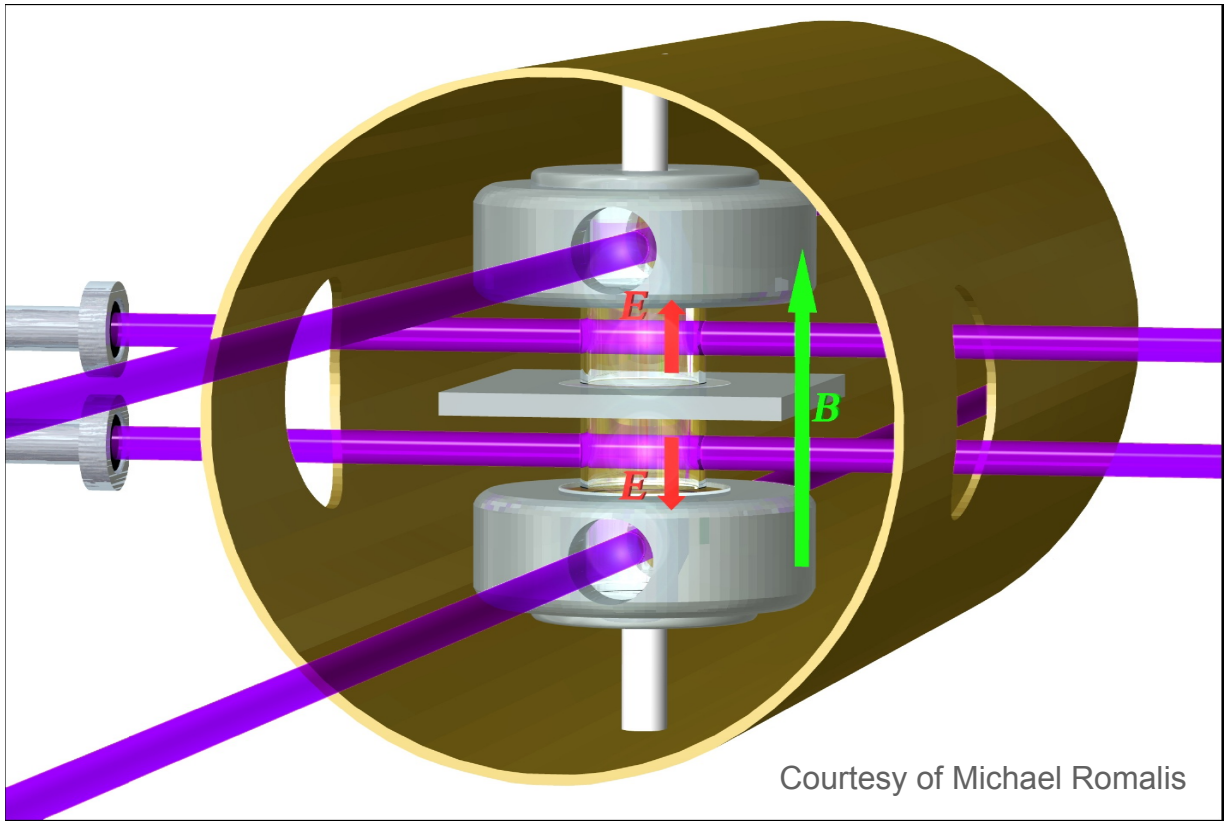

Courtesy of Michael Romalis

$$B = 10mG$$

$$E = 10kV/cm$$

$$f_+ = \frac{2\mu B + 2dE}{h} \approx 15 \text{ Hz}$$

$$f_- = \frac{2\mu B - 2dE}{h} \approx 15 \text{ Hz}$$

$$|f_+ - f_-| < 0.1 \text{ nHz}$$

Molecular EDM Searches

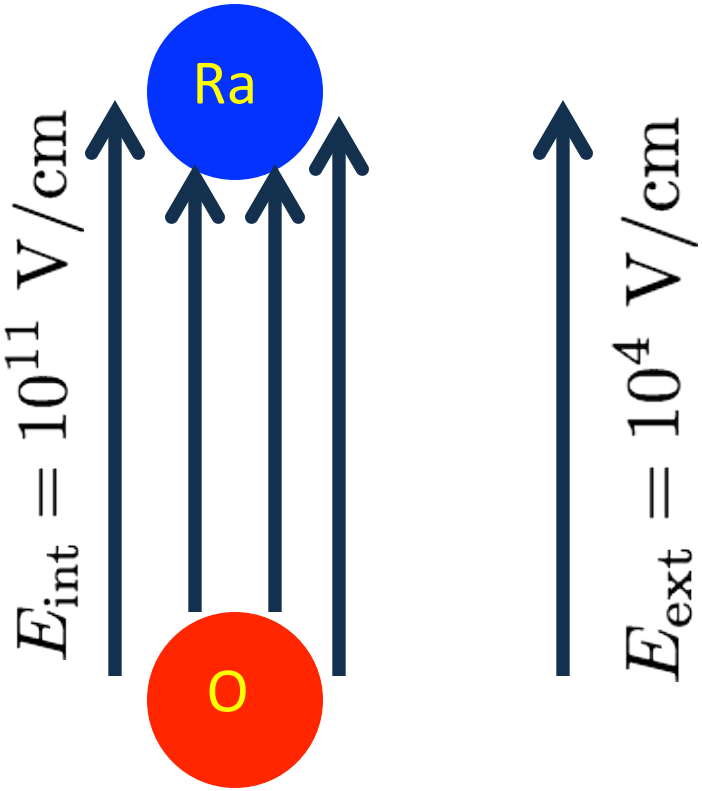

- Use a molecule to enhance the EDM signal
- Choose one highly electronegative, one electropositive. Large polarizability.
- Can be completely polarized using a weak field
- Difficult to access and control with lasers

Molecular EDM Searches

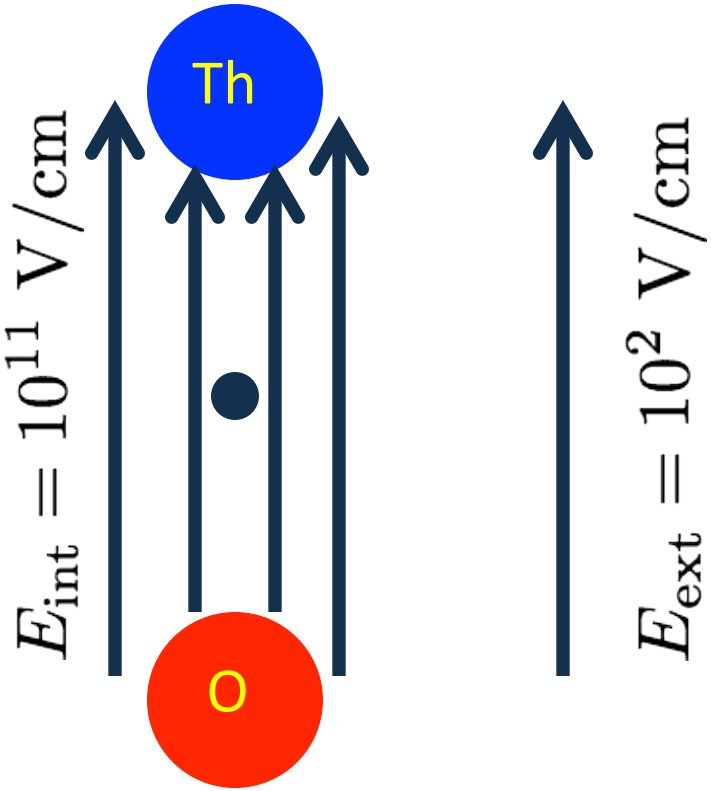

- Radicals can survive without reacting for a long time in vacuum
- Now the free electron dominates the Larmor precession
- Radicals are also easier to control with lasers
- YbF sets the best current limit on eEDM (Hudson et al., Nature 473, 493 (2011))

Glass-less measurement: Bottle of light

Atoms confined in optical dipole trap

* Maximum voltage now set by breakdown of vacuum, 300 kV/cm
* Leakage current less important
* New Systematic: Stark Interference
* Requires atom temperature < 1 mK
* Low temperature and precision control allow us to use a small number of atoms

M. V. Romalis and E. N. Fortson PRA 59, 4547 (1999)

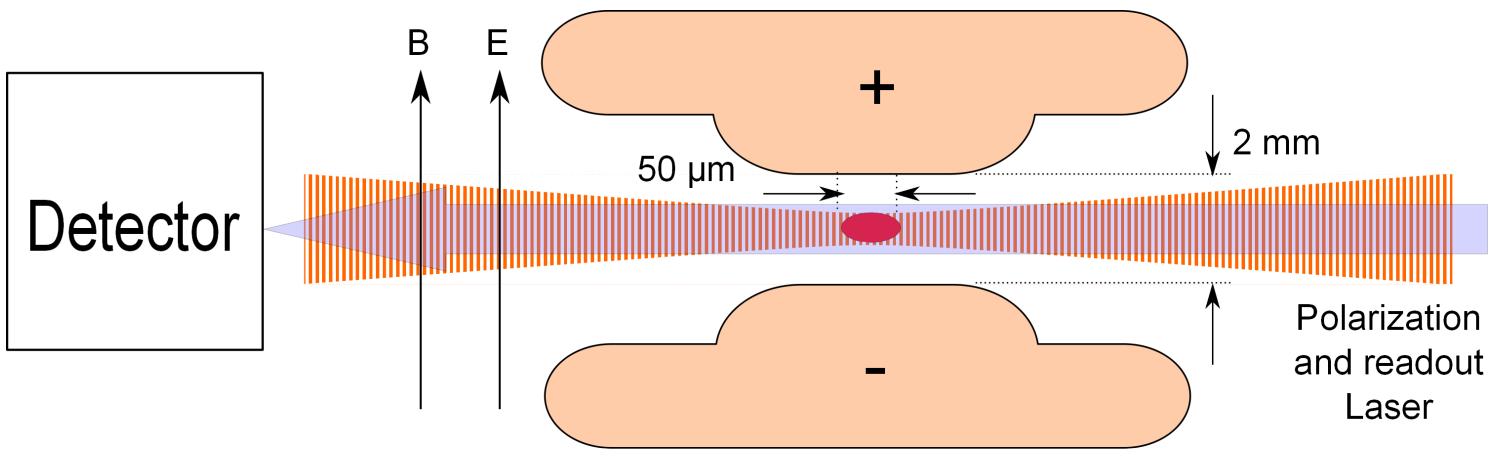

Why Radium?

- Shielding in Diamagnetic Atoms – *Schiff (1963)*
- Closely spaced parity doublet – *Haxton & Henley (1983)*
- Large intrinsic Schiff moment due to octupole deformation – *Auerbach, Flambaum & Spevak (1996)*
- Relativistic atomic structure (^{225}Ra / ^{199}Hg ~ 3)

  – *Dzuba, Flambaum, Ginges, Kozlov (2002)*

$$d \propto \sum_{i \neq 0} \frac{\left\langle \psi_o \middle| \hat{S}_z \middle| \psi_i \right\rangle \left\langle \psi_i \middle| \hat{H}_{\mathrm{PT}} \middle| \psi_0 \right\rangle}{E_0 - E_i} + c.c.$$

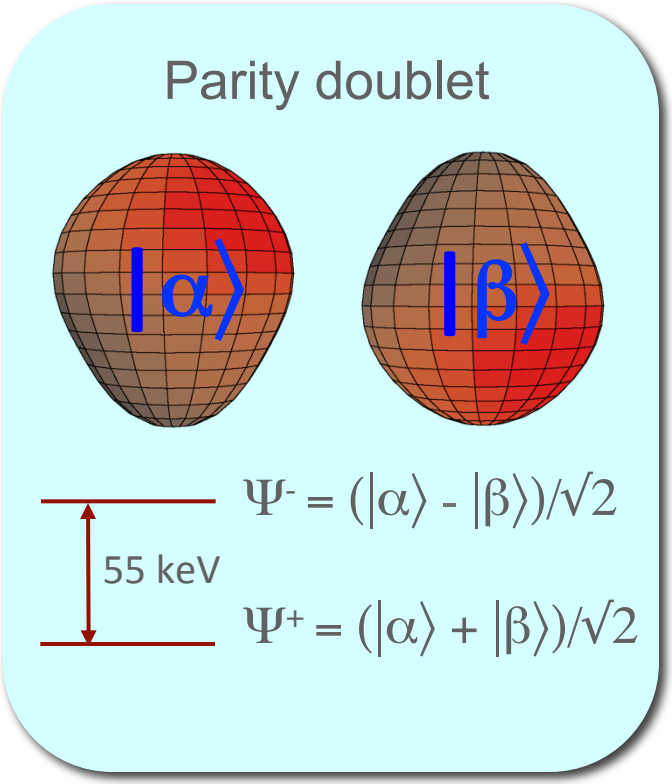

Enhancement Factor: EDM (^{225}Ra) / EDM (^{199}Hg)

Skyrme Model	Isoscalar	Isovector	Isotensor
SIII	300	4000	700
SkM*	300	2000	500
SLy4	700	8000	1000

Schiff moment of ^{225}Ra, Dobaczewski, Engel (2005)
Schiff moment of ^{199}Hg, Ban, Dobaczewski, Engel, Shukla (2010)

Radium Source

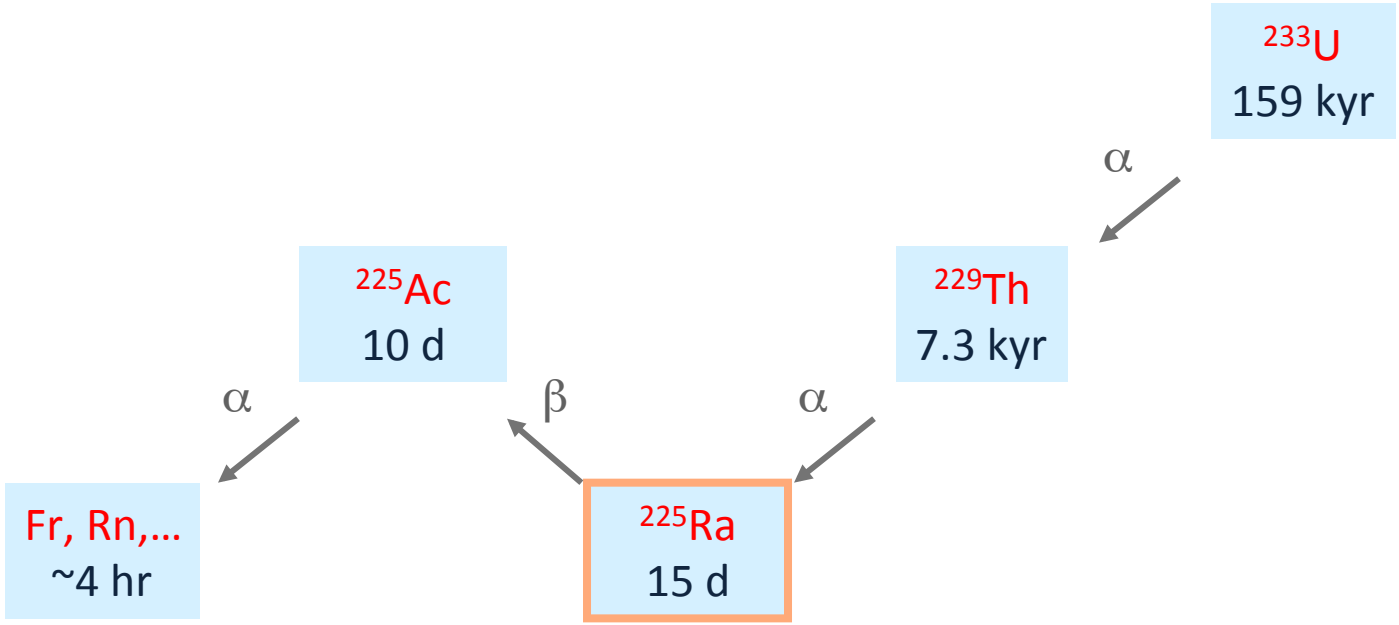

- Up to 30 mCi (750 ng) ^{225}Ra sources from:

  National Isotope Development Center (Oak Ridge, TN)
- Test source: 1 μCi (1 μg) ^{226}Ra
- Integrated Atomic Beam Flux ~ 10^8/s

Radium

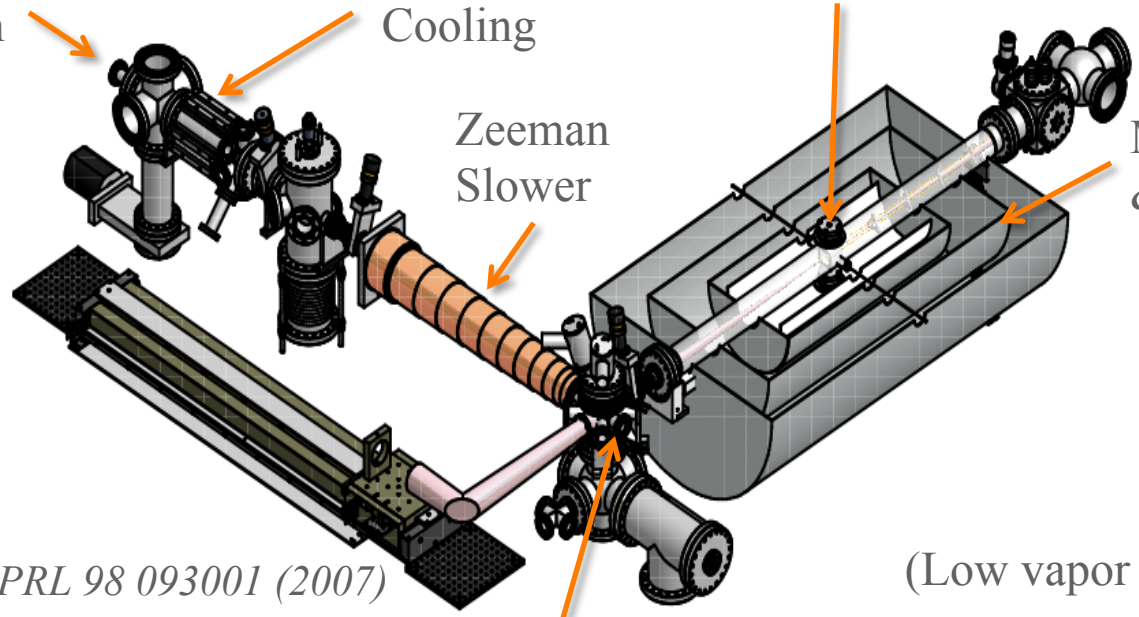

J. R. Guest et al., PRL 98 093001 (2007)

(Low vapor pressure)

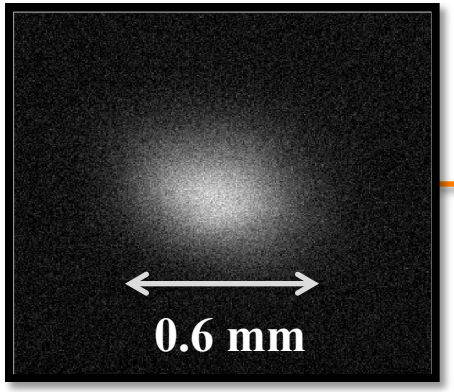

^{226}Ra MOT
20,000 atoms

For EDM:	For Testing:
Ra-225	Ra-226
I = 1/2, J = 0	I = 0, J = 0
$t_{1/2}$ = 15 days	$t_{1/2}$ = 1600 yrs

MOTs and EDM Measurements

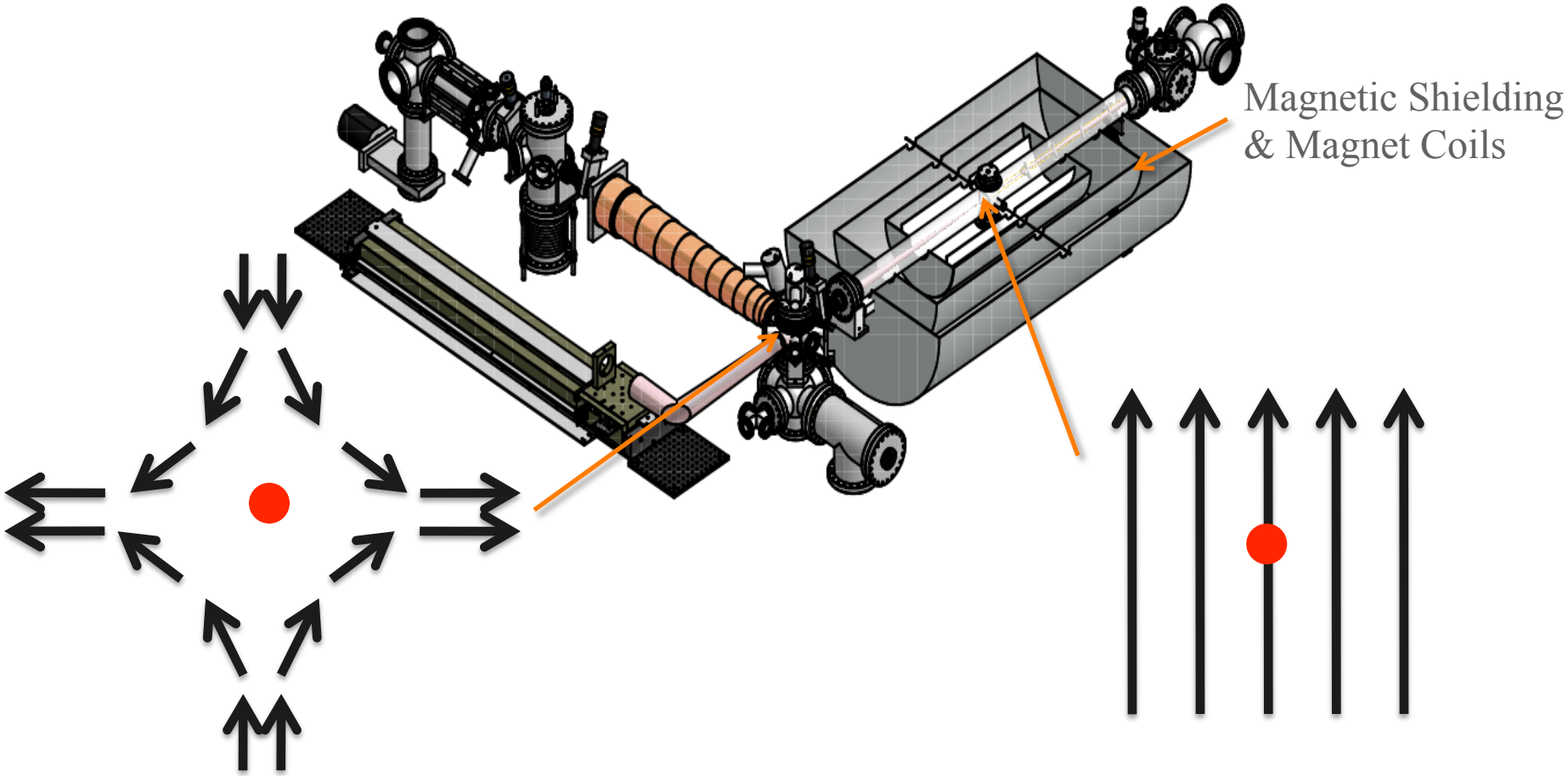

B Field in a MOT

B Field in an EDM Experiment

Apparatus

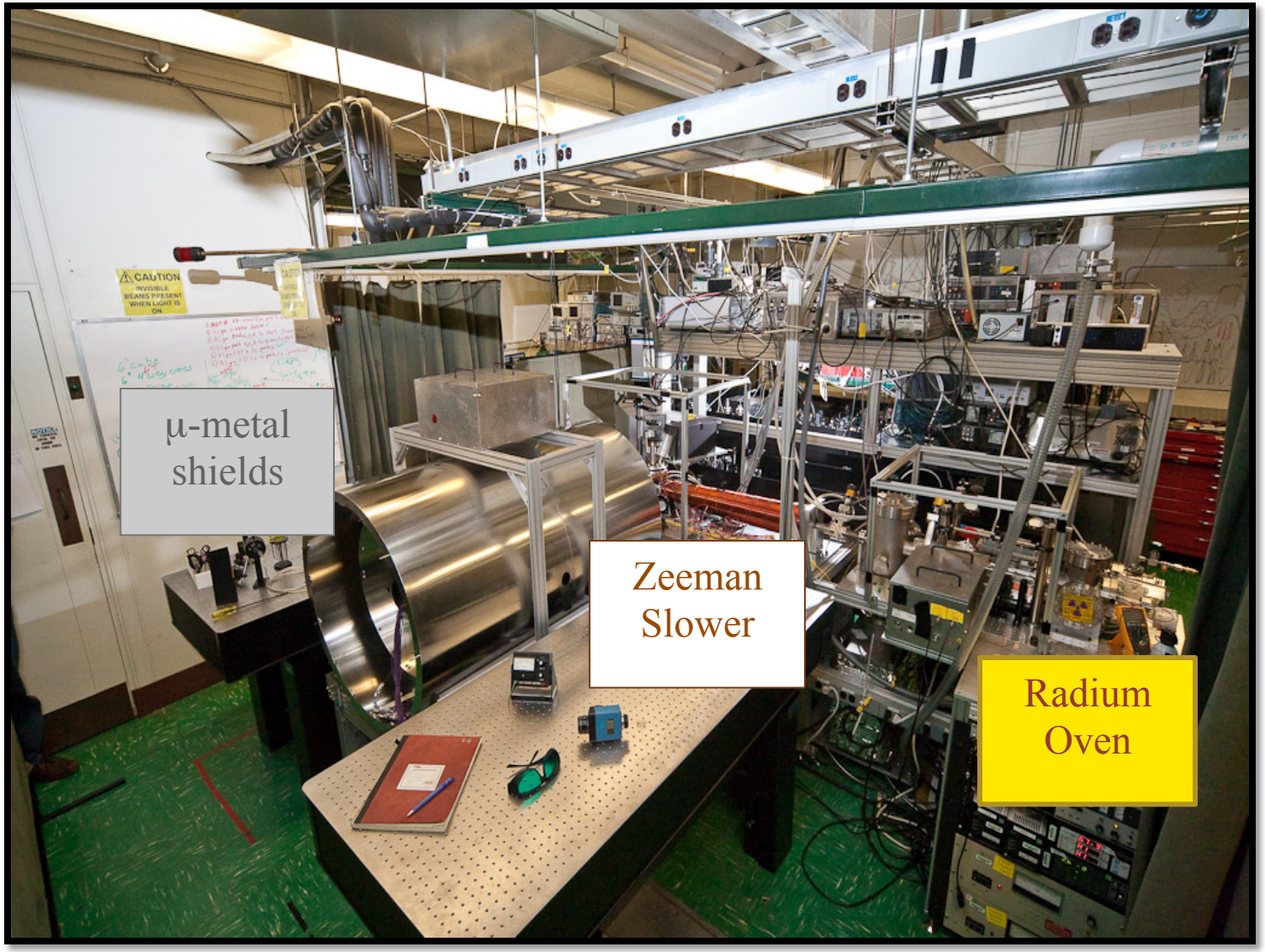
CAUTION
INVISIBLE BEAMS PRESENT WHEN LIGHT IS ON
μ-metal shields
Zeeman Slower
Radium Oven

Ra-225 Status

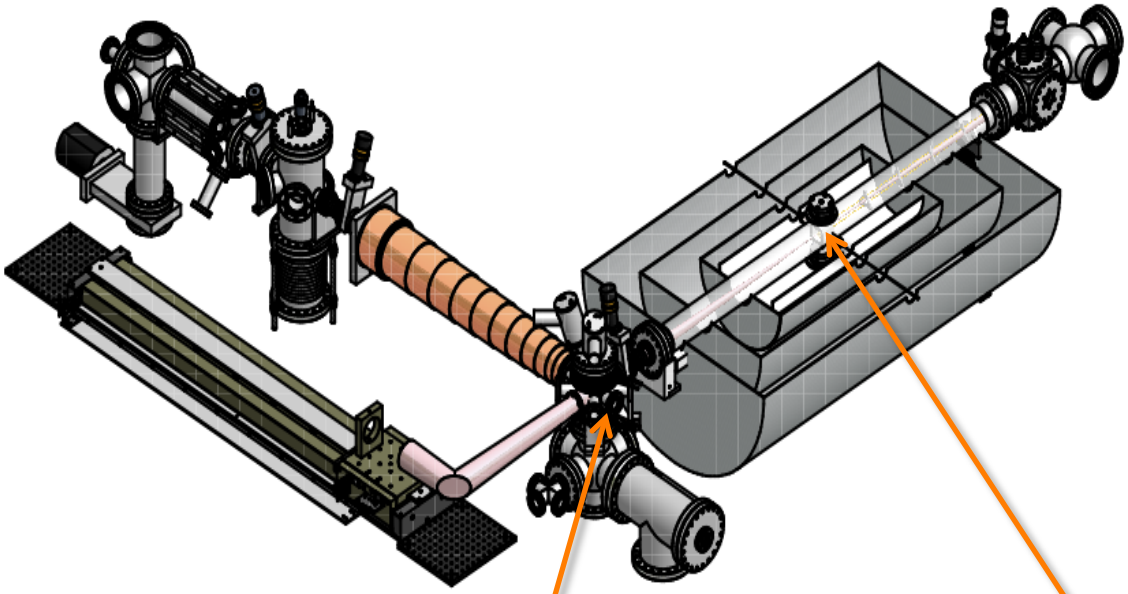

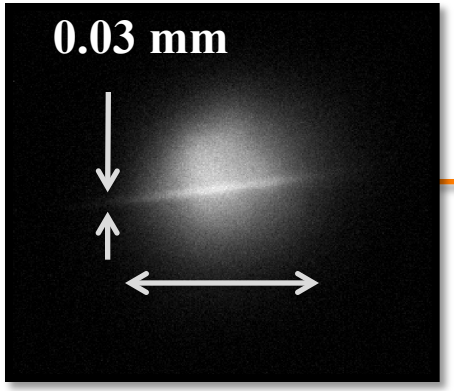

MOT + ODT
20,000 atoms Ra-226

1.3 mm

700 atoms
1.4% abs

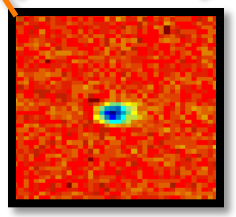

Absorption
Imaging

Ra-225 Status

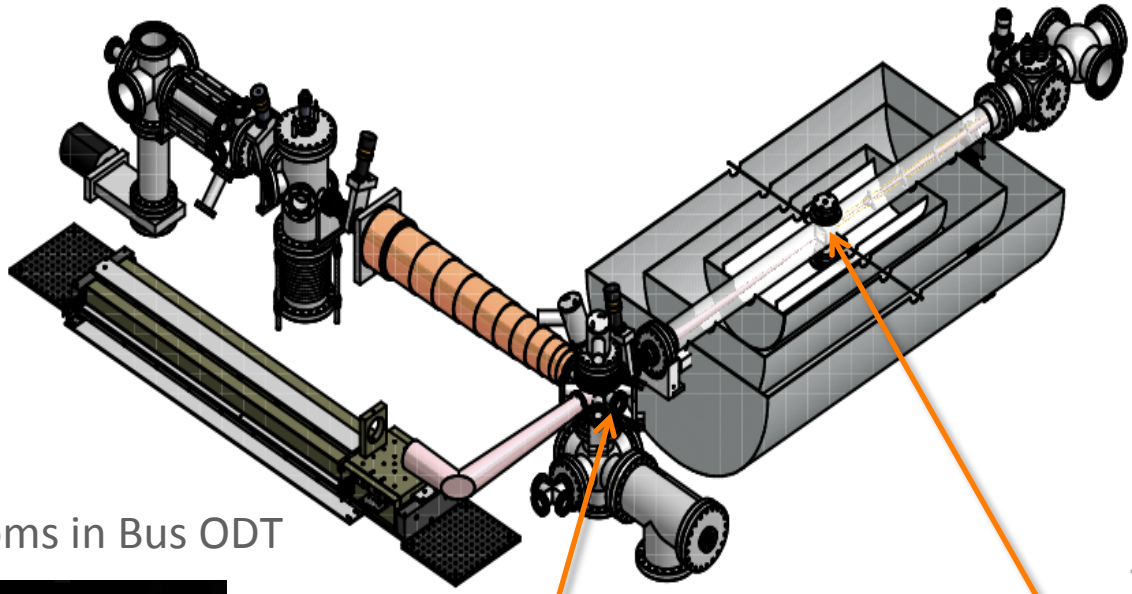

~70 Ra-225 Atoms in Bus ODT

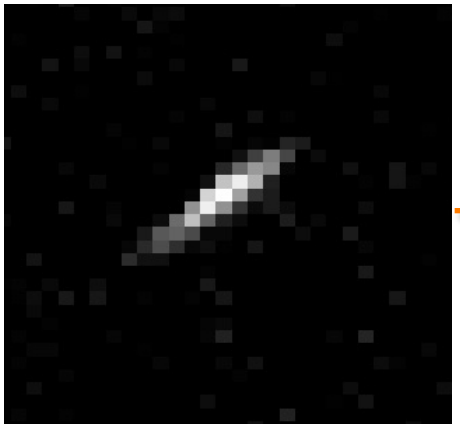

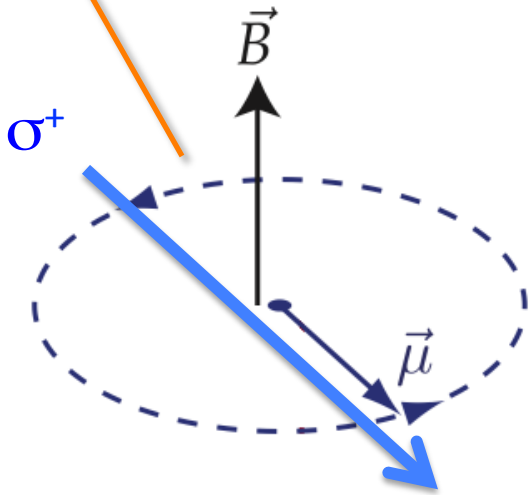

Statistics

$$\sigma_d^{\text{stat}} \geq \frac{\hbar}{2E\sqrt{\varepsilon N \tau T}}$$

parameter	present status w/ Ra-226	near term goal for Ra-225	comments
E, electric field (kV/cm)	100	100	complete HV system assembly
ε, efficiency	~0.1	0.1	optimize detection
N, # of atoms	10^3	10^3	vacuum upgrade
τ, storage time (s)	14	100	vacuum upgrade Optical Stability
T, integration time (days)	N/A	10	

initial goal of $3*10^{-26}$ *e* cm (1σ) is competitive with the best limits from Hg-199

Blue Upgrade

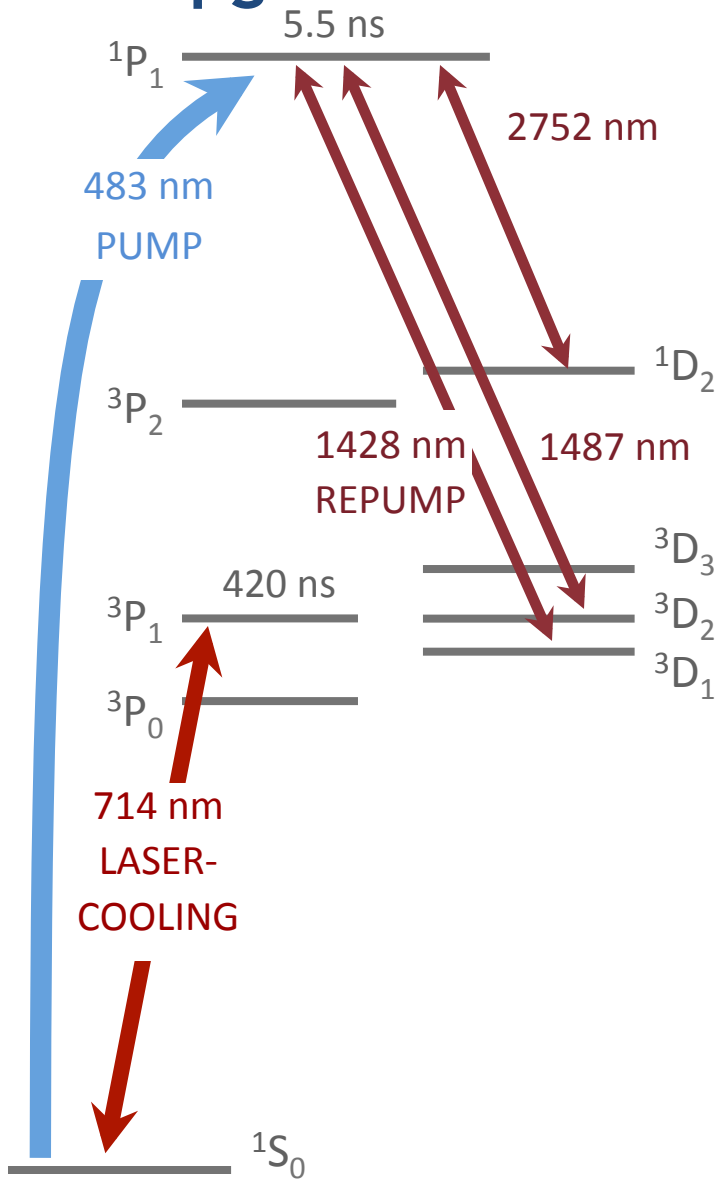

$$\sigma_d^{\text{stat}} \geq \frac{\hbar}{2E\sqrt{\varepsilon N \tau T}}$$

x30 – x100 Atom Capture Efficiency

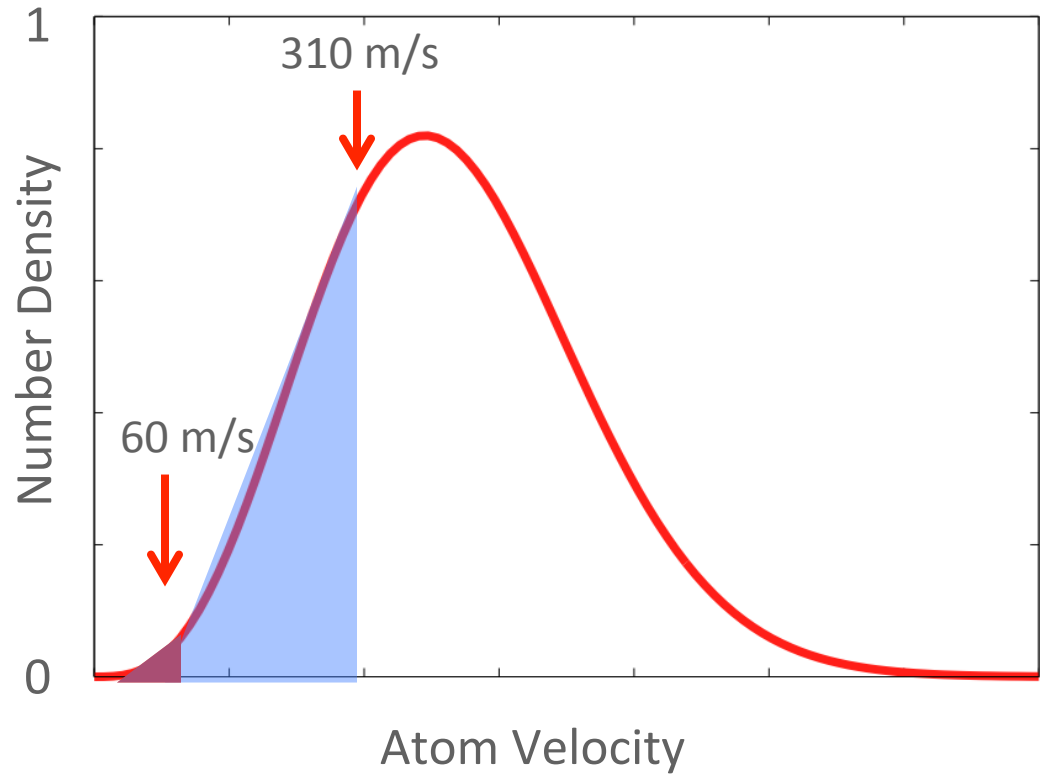

Project X

I.C. Gomes, J. Nolen et al.
Project X workshop, July 2012

Protons on thorium target: 1 mA x 1000 MeV = 1 MW

Predicted yields of some important isotopes:

Radon: ^{211}Rn >10^{13} ^{223}Rn ~10^{11} /s

Francium: ^{213}Fr >10^{13} ^{221}Fr >10^{14} ^{223}Fr >10^{12} /s

Radium: ^{223}Ra >10^{13} ^{225}Ra >10^{13} /s

Actinium: $^{225\text{-}229}$Ac >10^{14} /s

Compare 10^8 /s Today

Leakage Current Systematic

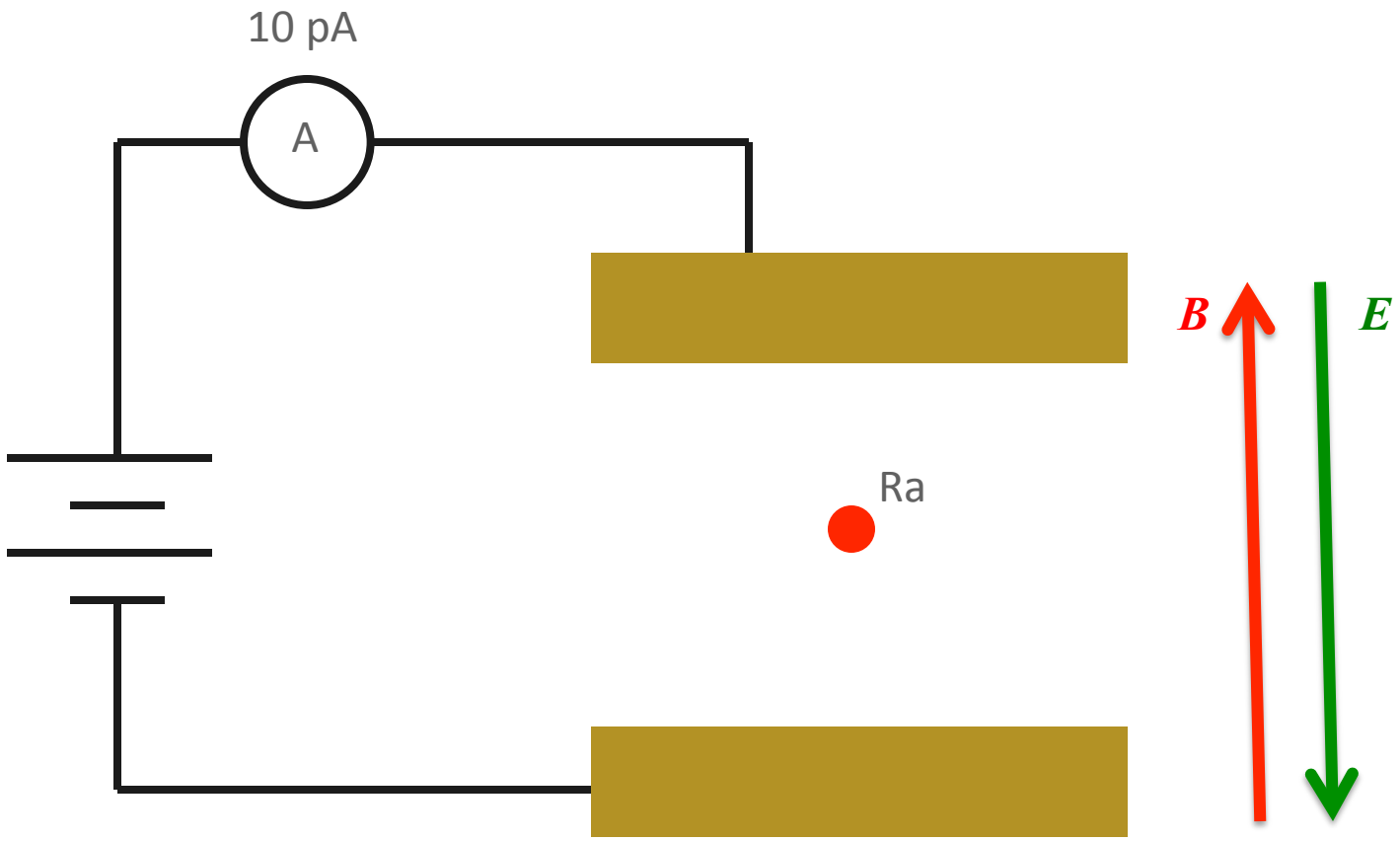

Leakage Current Systematic

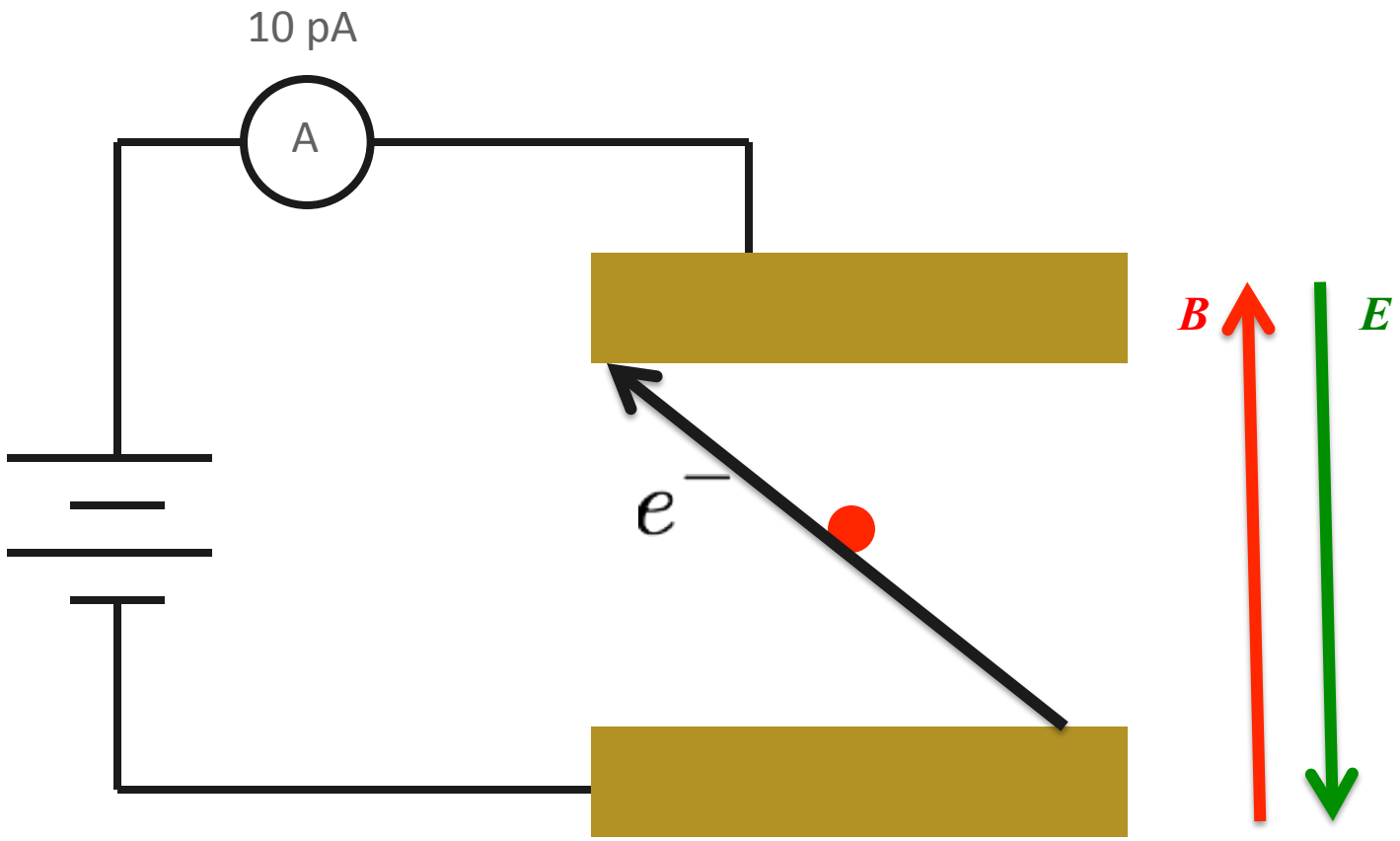

Leakage Current Systematic

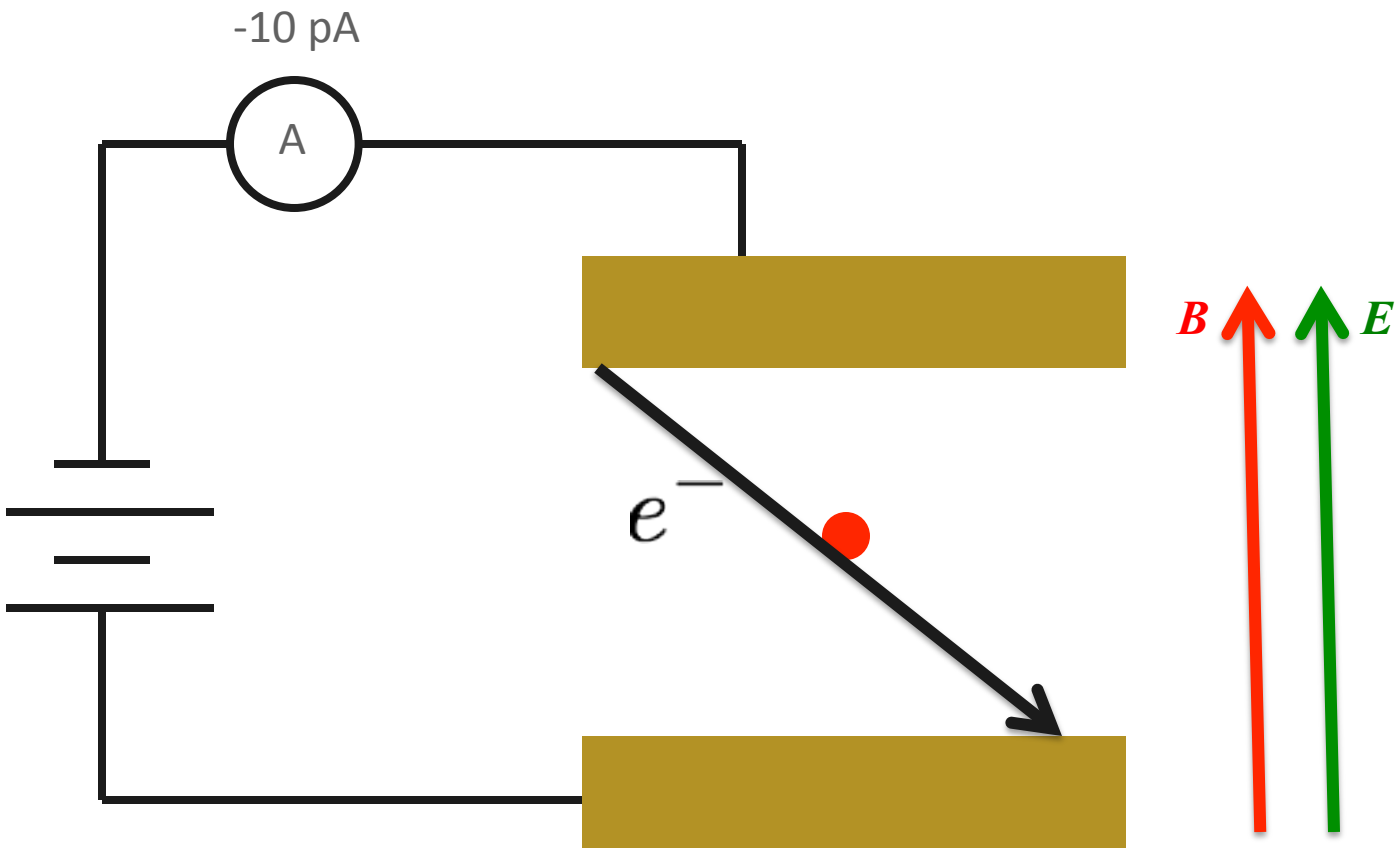

Leakage Current Systematic

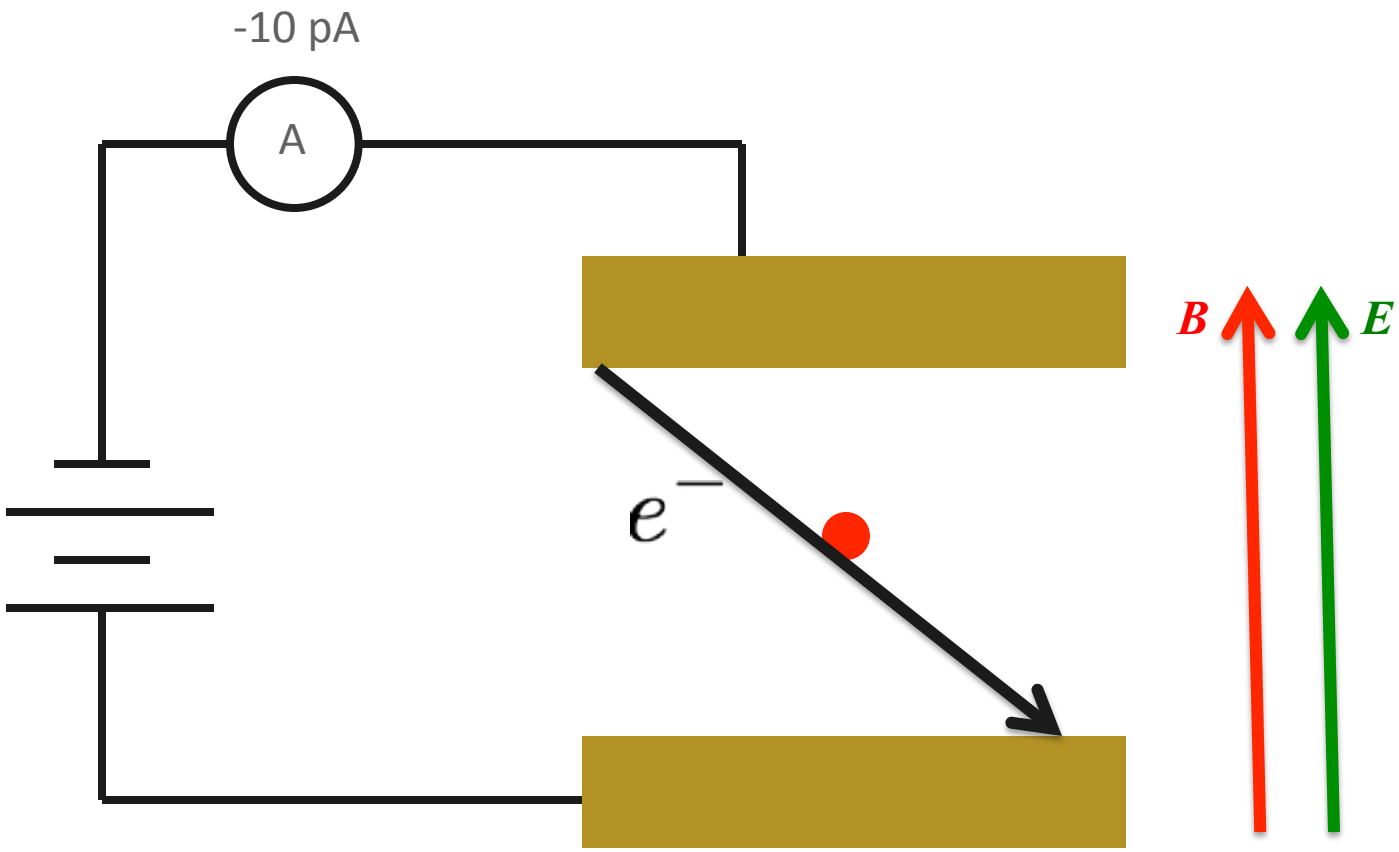

Appears as EDM Mimicking Systematic

Leakage Current Systematic

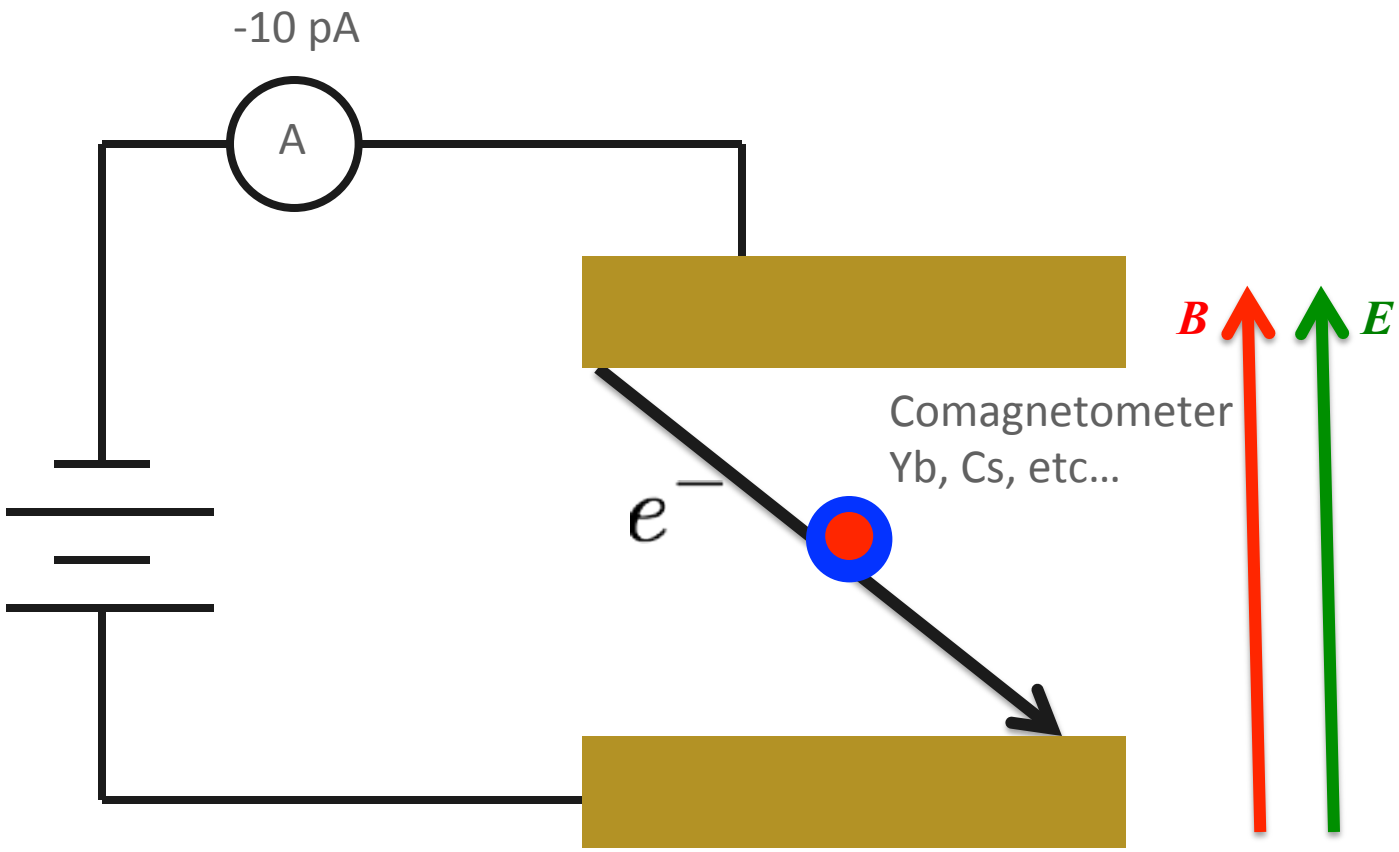

Leakage Current Systematic

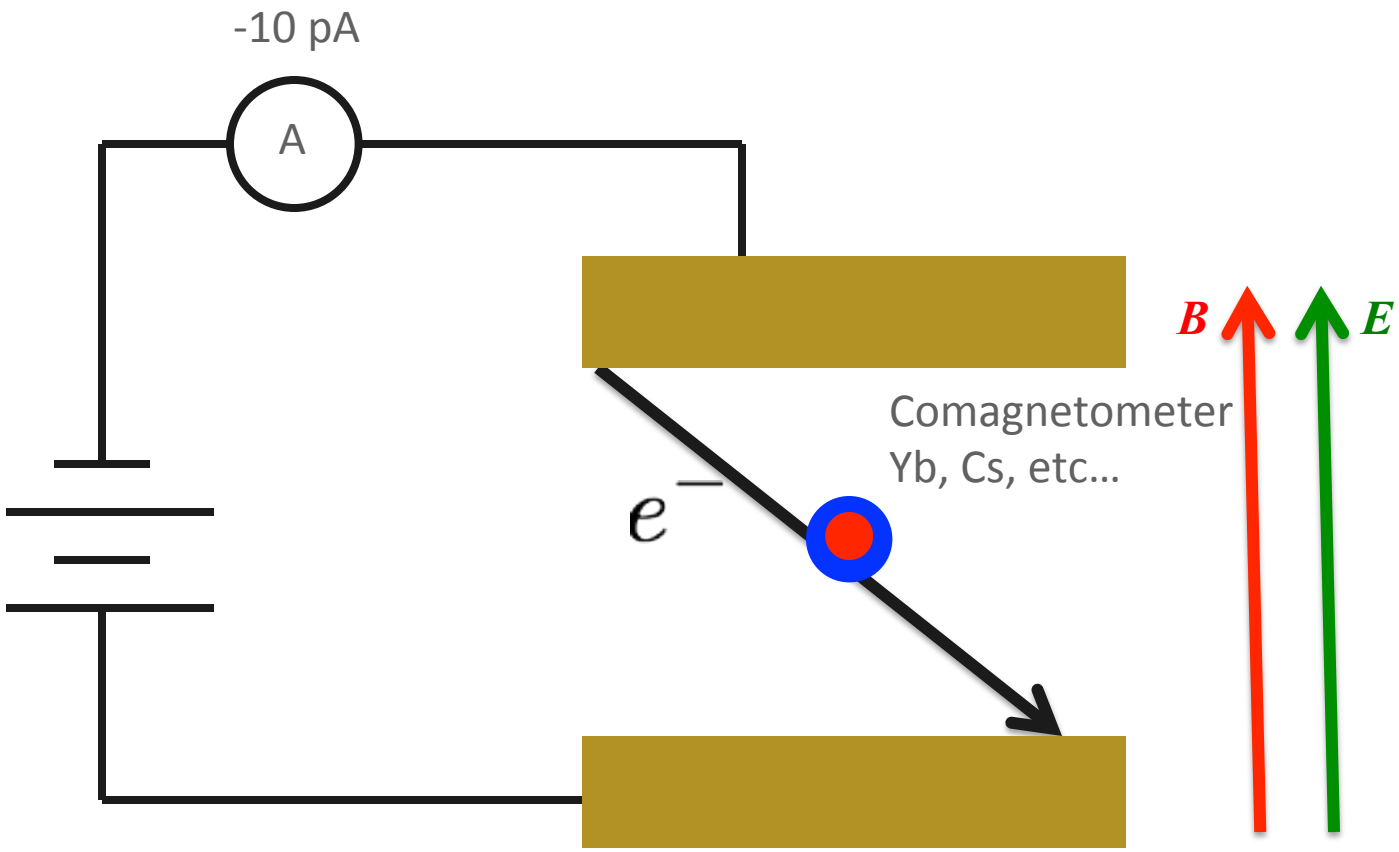

Comagnetometer dramatically improves upper limit on systematic size

Projections

	Phase I	Phase II	Project X
Statistical (e cm)	3*10^-26	10^-27	10^-28 to 10^-29

Systematic	Phase I (e cm)	Phase II w/ Comagnetometer (e cm)
Leakage Current (10 pA)	3*10^-26	5*10^-30
Stark Interference	5*10^-27	5*10^-30
Exv Effects	< 2*10^-27	5*10^-30
Geometric Phase	10^-35	10^-35

A picture says at least two words…

EDM Sectors

Strong *CP* Problem:

* *CP*-violation can be easily incorporated into QCD Lagrangian
* does not appear to be a feature of the theory – why?

Baryon Asymmetry of the Universe (BAU)
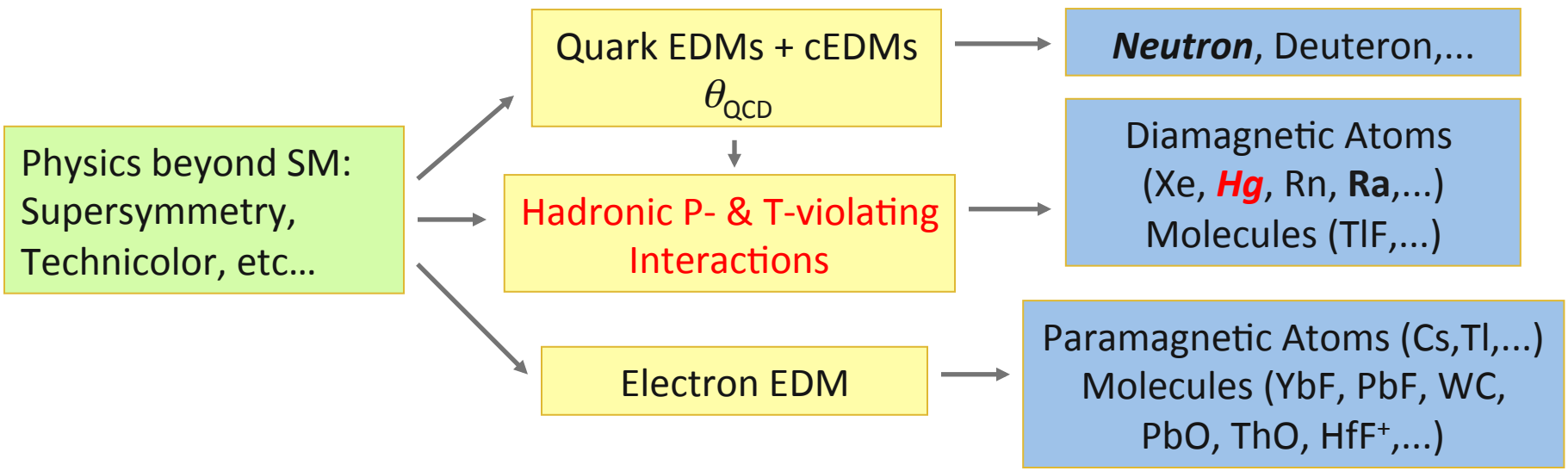
* *CP*-violation is one of Sakharov's conditions for dynamically generating BAU
* *CP*-violation within the CKM matrix is not enough to explain the observed BAU