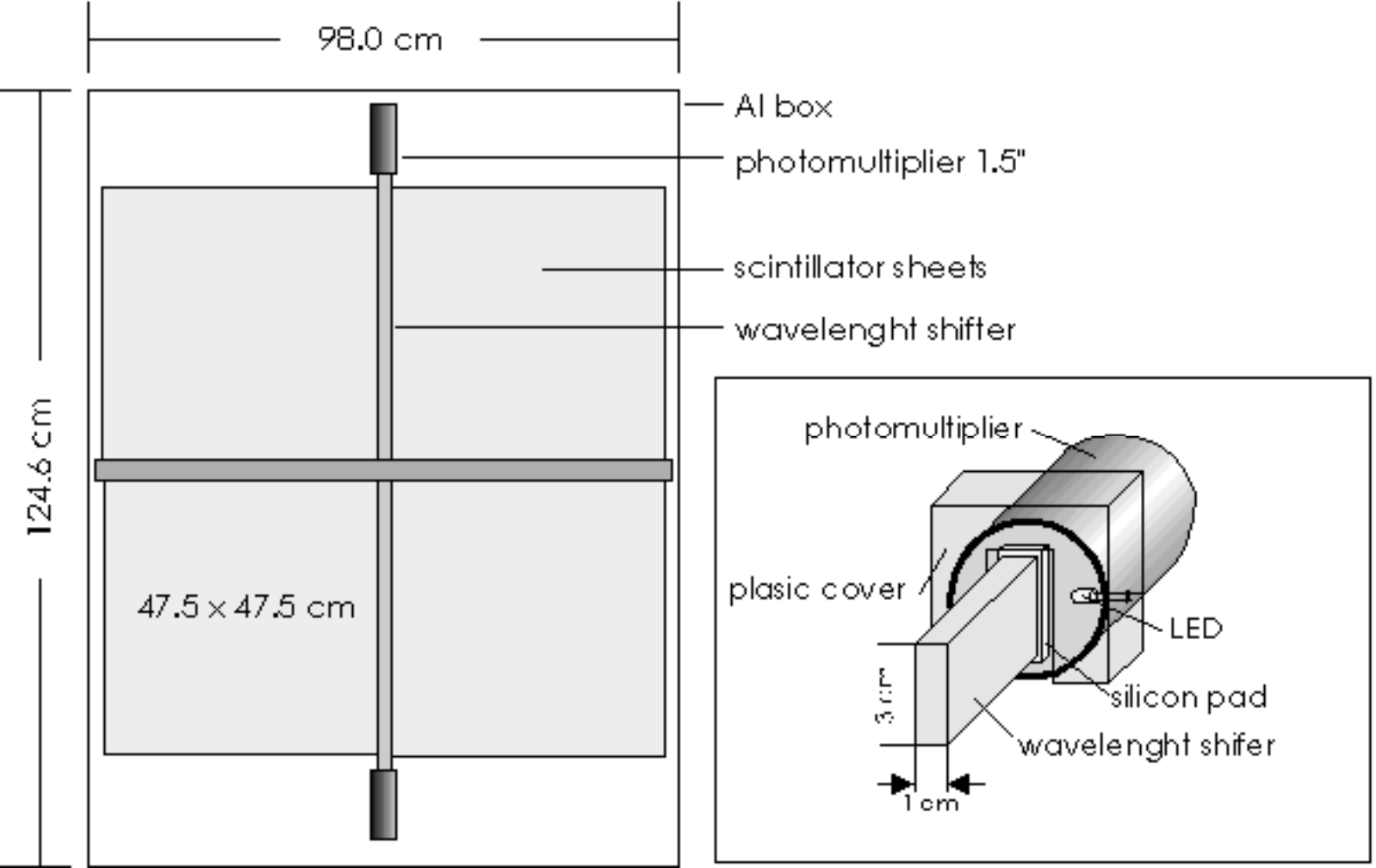
98.0 cm
124.6 cm
Al box
photomultiplier 1.5"
scintillator sheets
wavelenght shifter
47.5 x 47.5 cm
photomultiplier
plasic cover
LED
silicon pad
wavelenght shifer
3 cm
1 cm